DENTON COUNTY TRANSPORTATION AUTHORITY
1955 Lakeway Drive, #260, Lewisville, Texas 75057
972.221.4600 | RideDCTA.net

Board of Directors Regular Meeting

July 23, 2020 | 9:00 a.m.

To be held by Zoom Video Conference

NOTICE IS HEREBY GIVEN that the members of the DCTA Board of Directors will be meeting via video conference using Zoom. The meeting will be made available to the public at the following web address: https://zoom.us/j/93372593628 or by joining via telephone by dialing the following number: +1 346 248 7799; Meeting ID: 933 7259 3628

CALL TO ORDER

INVOCATION

PUBLIC COMMENT

This agenda item provides an opportunity for citizens to address the Board of Directors on any agenda item(s) or other matters relating to the DCTA. Each speaker will be given a total of three (3) minutes to address any item(s). Anyone wishing to speak shall be courteous and cordial. Any person who wishes to address the Board of Directors regarding any item(s) may do so by utilizing the "raise hand" function of the Zoom meeting at this time. Citizens that are not able to connect to the Zoom meeting must email his or her public comment to bpedron@dcta.net no later than 3:00 pm on Wednesday, July 22, 2020 to ensure the comment will be read. The Board of Directors is not permitted to take action on any subject raised by a speaker during Public Comments. However, the Board of Directors may have the item placed on a future agenda for action; refer the item to the DCTA Administration for further study or action; briefly state existing DCTA policy; or provide a brief statement of factual information in response to the inquiry.

CONSENT AGENDA

1. **Consider Approval of June 25, 2020 Minutes**
   (packet pages 9-15)
   Action Item
   Presenter: Dianne Costa, Highland Village, Board Chair
   Item Summary: Approval of the June 25, 2020 meeting minutes will be requested.
   Backup Information: Consent Item 1: June 25, 2020 Minutes

2. **Consider Approval of Monthly Financial Statements for June 2020 and Quarterly Reports for Q3 FY20**
   (packet pages 16-40)
   Action Item
   Presenter: Marisa Perry, CFO/VP of Finance
   Item Summary: Board approval will be requested of the following items:
   - Financial Statements for June 2020
   - Capital Projects Budget Report for June 2020
   - Quarterly Investment Report Q3 FY20
   - Quarterly Grants Report Q3 FY20

   Backup Information: Memo: Monthly Financial Statements for June 2020
   Exhibit 1a: Monthly Financial Statements – June 2020
   Exhibit 1b: Capital Projects Budget Report – June 2020
   Exhibit 2: Quarterly Investment Report Q3 FY20
   Exhibit 3: Quarterly Grants Report Q3 FY20

3. **Consider and Authorize the CEO to Execute an Assignment of Ground Lease with Riverside DPH, LP. Assigning Leasehold Interest to HC Hebron 121 Station 4, LLC**
(packet pages 41-73)
Action Item
Presenter: Kristina Holcomb, Deputy CEO
Item Summary: DCTA initially entered into an agreement with Riverside DPH, L.P. on August 18, 2016 for the lease of certain premises located at the Hebron Station. The first amendment went into effect on May 4, 2017 and expires December 31, 2026. The agreement includes an option period of 10 years, expiring on December 31, 2036. DCTA staff requests that the Board of Directors review the supporting documents and approve the reassignment from Riverside DPH, L.P. to HC Hebron 121 Station 4, LLC.
Backup Information: Memo: Consider and Authorize the CEO to Execute an Assignment of Ground Lease with Riverside DPH, LP. Assigning Leasehold Interest to HC Hebron 121 Station 4, LLC
Exhibit 1: Assignment of Ground Lease to HC Hebron 121 Station 4, LLC.
Exhibit 2: 2016 Board Memo Regarding Huffines Development Agreement
Exhibit 3: Ground Lease Agreement 2016
Exhibit 4: Ground Lease Amendment 2017
Exhibit 5: 2016 FTA Approval Letter: Huffines Joint Development Project
Exhibit 6: Hebron 121 Station Technical SOW: Huffines Joint Development Project

4. **Consider Approval of Resolution R20-10 Ratifying FY2020 Budget Amendment 2020-06 for the Described Land Acquisition**
(packet pages 74-80)
Action Item
Presenter: Marisa Perry, CFO/VP of Finance
Item Summary: The Board approved the land acquisition to purchase Lot 1, Block A, Elm Fork Industrial Park, an Addition to the City of Lewisville, Texas, for a purchase price not to exceed $2,300,000 plus all closing and other acquisition costs, including, but not limited to, relocation costs required by state and federal law at the June Board meeting upon coming out of closed session. Staff is therefore seeking approval of this resolution ratifying the Board's approval of the budget amendment for the land acquisition.
Backup Information: Memo: Approval of Resolution R20-10 Ratifying FY2020 Budget Amendment 2020-06 for the Described Land Acquisition
Exhibit 1: Resolution R20-10 Ratifying FY2020 Budget Amendment 2020-06 (with Exhibit 1a)
Exhibit 2: Year to Date FY2020 Budget Revisions

INFORMATIONAL REPORTS

1. **Monthly Financial Reports** (packet pages 81-86)
Item Summary: DCTA staff will answer questions of the Board regarding updates on financial items.
Backup Information: Memo 1: Monthly Sales Tax Receipts
Exhibit 1: FY20 Monthly Sales Tax Report
Memo 2: Monthly Mobility-as-a-Service Update
Memo 3: Budget Information

2. **Ridership Trend Report** (packet pages 87-93)

Item Summary: Exhibits 1-4 provide an overview of total monthly ridership trends across all DCTA services--comparing FY 19 and FY20 with the associated COVID impacts. Note that A-train and Connect May-June ridership each increased by approximately 23 percent.

Backup Information: Memo 1: Ridership Trend Report
Exhibit 1: FY19 & FY20 Total Monthly Ridership - Rail
Exhibit 2: FY19 & FY20 Total Monthly Ridership - Bus
Exhibit 3: FY19 & FY20 Total Monthly Ridership - Access
Exhibit 4: FY19 & FY20 Total Monthly Ridership – On-Demand
Exhibit 5: A-train Ridership and Service Level Change History
Exhibit 6: A-train Daily Passenger Counts February-July 15, 2020

3. **Contracted Service Agreements Monthly Progress Report** (packet pages 94-150)

Item Summary: This update is provided per request of the DCTA Board of Directors at the April 2020 board meeting. The attached memo provides a detailed history and staff engagement of current contracted service agreements that are scheduled for renewal. DCTA staff requests that the Board of Directors review the memo and staff can answer questions the Board may have regarding the information provided.

Backup Information: Memo: Contracted Service Agreements Monthly Progress Report
Exhibit 1: City of McKinney/DCTA Fourth Amended Interlocal Agreement Fully Executed

4. **Information Requested by Board Members at the April Board Meeting** (packet page 151)

Item Summary: The information below is being provided per the request of Board Members at the April Board Meeting. DCTA will answer any questions the Board may have regarding the following.

Backup Information: Exhibit 1: Five Year History on Salary and Wages and Key Drivers for Increases

5. **Information Requested by Board Members at the June Board Meeting** (packet pages 152-162)

Item Summary: The information below is being provided per the request of Board Members at the April Board Meeting. DCTA staff requests that the Board of Directors review the supporting documents and staff can answer questions the Board may have regarding the information provided.

Backup Information: Exhibit 1: Average Ridership and Cost per Passenger for Lakeway On-Demand Zone, Denton Evening On-Demand Zone and Lyft
Exhibit 2: A-train Ridership and I-35E Construction Impacts

REGULAR AGENDA

1. **Consider Approval of Resolution R20-12 Extending COVID-19 Service Levels on Bus and Rail, Approving Modifications to Evening On-Demand Service, and Adoption of University of North Texas (UNT) Fall 2020 Semester Service Levels Through January 2021**
(packet pages 163-273)
Action Item

Presenters: Raymond Suarez, CEO
Kristina Holcomb, Deputy CEO
Nicole Recker, VP of Mobility Services and Administration

Item Summary: Due to COVID-19, stay-at-home orders and state-wide disaster declarations, DCTA experienced ridership declines across the system. In response to this health disaster, DCTA implemented temporary system-wide service modifications on March 23, 2020. Due to the continued impacts of COVID-19, DCTA implemented additional temporary service modifications on May 11, 2020. DCTA staff is recommending approval of the following through January 2021:

- Extension of existing COVID-19 service levels on bus and rail
- Modifications of evening on-demand service out of A-train stations (effective August 24, 2020)
- UNT Fall 2020 semester service levels (effective August 24, 2020)

Backup Information: Memo: Consider Approval of Resolution R20-12 Extending COVID-19 Service Levels on Bus and Rail, Approving Modifications to Evening On-Demand Service, and Adoption of University of North Texas (UNT) Fall 2020 Semester Service Levels Through January 2021
Exhibit 1: Resolution R20-12 Extending COVID-19 Service Levels on Bus and Rail, Approving Modifications to Evening On-Demand Service, and Adoption of University of North Texas (UNT) Fall 2020 Semester Service Levels Through January 2021
Exhibit 2: COVID-19 Service Modification Historical Timeline
Exhibit 3: Service Level Overview
Exhibit 4: June 2020 Public Involvement and Title VI Analysis Report

2. **Budget Workshop Follow-up Items**
(packet pages 274-284)
Discussion Item

Presenter: Marisa Perry, CFO/VP of Finance

Item Summary: Staff will provide additional information requested during June Budget Workshop and will answer any additional questions related to the Proposed Fiscal Year 2021 Operating & Capital Budget and Reserve Policies.

Backup Information: Memo: Information Requests from June Budget Workshop
Exhibit 1: CARES Act Funding Detail Projections
Exhibit 2: Rail Purchased Transportation Detail
Exhibit 3: Student Survey Data
Exhibit 4(a-c): Benefit Survey Information
Exhibit 5: FY2021 Long Range Financial Plan

3. **Transportation Reinvestment Policy (TRiP) Development**
(packet pages 285-309)
Discussion Item

Presenter:	Raymond Suarez, CEO Andrew Ittigson, Project Manager/Senior Transit Planner for AECOM
Item Summary:	Staff and DCTA planning consultant, AECOM will present an overview of TRiP and how it may be implemented. TRiP will enable partnerships between the agency and its member cities on mutually-beneficial infrastructure investments in transit-supportive projects. Recommendations from the study will inform development of a new policy and implementation plan for future Board consideration.
Backup Information:	Memo: Transportation Reinvestment Policy (TRiP) Development Exhibit 1: AECOM Presentation

4. **COVID Pay Options**
(packet pages 310-311)
Action Item

Presenter:	Raymond Suarez, CEO
Item Summary:	In April 2020, the Amalgamated Transit Union, which represents NTMC bus operators, sent a nationwide letter requesting additional compensation for operators while working during the COVID-19 pandemic. On May 27, 2020 and June 24, 2020, DCTA staff discussed options and cost implications with the DCTA Board of Directors to recognize NTMC Bus Operators for their dedication of service and commitment to safety.
Backup Information:	Memo: COVID Pay Overview Exhibit 1: COVID Pay Option Cost Estimate Calculations

5. **Consider Award of RFB 20-13 Cummins Auto Parts**
(packet pages 312-731)
Action Item

Presenter:	Nicole Recker, VP of Mobility Services and Administration
Item Summary:	Staff conducted a Request for bid (RFB) for the purchase of Cummins Auto Parts. Staff requests that the Board review the supporting documentation and is recommending award to three firms: Industrial Power, LLC., Kirk's Automotive, Inc. and Muncie Transit Supply.
Backup Information:	Memo: Consider Award of RFB 20-13 Cummins Auto Parts Exhibit 1: Items to be awarded Exbibit 2: Request for Bid Package Exhibit 3: Industrial Power, LLC's Bid Exhibit 4: Kirk's Automotive Inc.'s Bid Exhibit 5: Muncie Reclamation & Supply dba Muncie Transit Supply's Bid

6. City of Coppell Lyft Contract Renewal
(packet pages 732-743)
Discussion Item

Presenter: Lindsey Baker, Director of Government Affairs
Item Summary: The Coppell City Council would like to renew the current interlocal agreement for workforce mobility services for an additional one-year term. Staff recommends the Board of Directors direct staff to proceed with amending the Interlocal Agreement with City of Coppell for Mobility Services, that includes a renegotiated budget and one-year extension, to be brought to the Board for consideration in August.
Backup Information: Memo: City of Coppell Lyft Contract Renewal
Exhibit 1: Interlocal Agreement with City of Coppell
Exhibit 2: Administrative Fee Policy

7. Irving Holdings MUTD Task Order
(packet pages 744-867)
Discussion Item

Presenter: Lindsey Baker, Director of Government Affairs
Item Summary: The current Irving Holdings Task Order, for MUTD taxi operations with a budget of $137,000, expires September 30, 2020. In addition, the MUTD Board has requested the current taxi voucher/subsidy program, operated by Irving Holdings, shift to a flat rate fare program. This requires a programmatic amendment to the task order. Staff will have the draft Task Order 3 for the Board's review and consideration at the August board meeting for a term of one-year and a budget of $184,000.
Backup Information: Memo: Irving Holdings MUTD Task Order
Exhibit 1: Irving Holdings Parent ILA
Exhibit 2: Task Order 1
Exhibit 3: Task Order 2

8. Consider Award of Lakeway Administration Building Lease Extension
(packet pages 868-878)
Action Item

Presenter: Nicole Recker, VP of Mobility Services and Administration
Item Summary: DCTA initially entered into an agreement with Blacktop LLC on July 4, 2014 ("Original Lease") for the lease of 1955 Lakeway Drive, Suite #260, Lewisville, TX 75057 to serve as office space for administrative staff. The first amendment and extension of the lease agreement went into effect on March 23, 2017 ("First Amendment") and expires September 30, 2020. Terms for a 24-month extension ("Second Amendment") were included in the First Amendment agreement. DCTA staff requests that the Board of Directors review the supporting documents and approve a 24-month extension of 1955 Lakeway Drive, Suite #260, Lewisville, TX 75057, expiring on September 30, 2022, to serve as office space for DCTA administrative staff.
Backup Information: Memo: Consider Award of Lakeway Administration Building Lease Extension
Exhibit 1: Lakeway Lease History
Exhibit 2: "Second Amendment" Lakeway Administration Building Lease Agreement (proposed)
Exhibit 3: "First Amendment" Lakeway Administration Building Lease Agreement (current)

9. **Discussion of Local & Regional Transportation and Legislative Issues**
   Information Item
   Presenters: Dianne Costa, Highland Village, Board Chair
   Raymond Suarez, CEO
   Kristina Holcomb, Deputy CEO
   Item Summary: The Board Chair and staff will provide an update on local and regional transportation initiatives and discuss state and federal legislative issues.

CONVENE EXECUTIVE SESSION

The Board may convene the Regular Board Meeting into Closed Executive Session for the following:

A. As Authorized by Section 551.071(2) of the Texas Government Code, the Board of Directors Meeting may be Convened into Closed Executive Session for the Purpose of Seeking Confidential Legal Advice from the General Counsel on any Agenda Item Listed Herein or the Regular Board Meeting Agenda.
B. As Authorized by Section 551.072 of the Texas Government Code, the Board of Directors Meeting may be Convened into Closed Executive Session for the Purpose of Deliberation regarding Real Property: Discuss acquisition, sale or lease of real property related to long-range service plan within the cities of Denton, Lewisville, Highland Village, or the A-train corridor.

RECONVENE OPEN SESSION

Reconvene and Take Necessary Action on Items Discussed during Executive Session.

FUTURE AGENDA ITEMS AND BOARD MEMBER REQUESTS

Staff will discuss proposed future agenda items. Board members may request an informational item or action item to be added to the next Board meeting agenda.

6. Backup Information: Exhibit 1: Board Agenda Outlook as of 07.17.2020 (packet page 879)

REPORT ON ITEMS OF COMMUNITY INTEREST

Pursuant to Texas Government Section 551.0415 the Board of Directors may report on following items: (1) expression of thanks, congratulations, or condolences; (2) information about holiday schedules; (3) recognition of individuals; (4) reminders about upcoming DCTA and Member City events; (5) information about community events; and (6) announcements involving imminent threat to public health and safety.

ADJOURN

1955 Lakeway Drive, #260, Lewisville, Texas 75057
972.221.4600 | RideDCTA.net

Board Members:
Dianne Costa, Highland Village, *Chair*
TJ Gilmore, Lewisville, *Vice Chair*
Sam Burke, Denton County Seat 2, *Secretary*
Cesar Molina, Denton County Seat 1
Chris Watts, Denton

Non-Voting Board Members:
Mark Miller, Ron Trees, Connie White, Carter Wilson, Tom Winterburn, Joe Perez

Staff Liaison:
Raymond Suarez, CEO

This notice was posted on 7/17/2020 at 3:44 PM.

Brandy Pedron, Executive Administrator | Board Support | FOIA

DCTA DENTON COUNTY TRANSPORTATION AUTHORITY

Board of Directors Meeting Minutes for: June 25, 2020

Board of Directors
Regular Meeting Minutes

The Board of Directors of the Denton County Transportation Authority convened the Regular Meeting of the Board of Directors with Dianne Costa, Chair presiding on June 25, 2020 remotely and at Medical City of Lewisville Grand Theatre.

Attendance

Voting Members
Dianne Costa, Chair, Highland Village
TJ Gilmore, Vice Chair, Lewisville
Sam Burke, Secretary, Denton County
Chris Watts, Denton
Cesar Molina, Denton County

Non-voting Members
Tom Winterburn, Corinth
Carter Wilson, Frisco (remotely)
Connie White, Small Cities
Ron Trees, Little Elm (remotely)
Joe Perez, The Colony (remotely)

Legal Counsel
Joe Gorfida, NJDHS

NTMC Voting Members
Richard Hayes, Vice Chair
Don Combs
Sara Hensley
Raymond Suarez

DCTA Executive Staff
Raymond Suarez, Chief Executive Officer
Kristina Holcomb, Deputy Chief Executive Officer
Marisa Perry, Chief Financial Officer/Vice President of Finance
Nicole Recker, Vice President of Mobility Services and Administration

Guest Speakers
Ron Holifield, SGR
Dee Leggett, LTK
Tom Ryden, LAN
Brent Patterson, Stateside

Other DCTA Staff Attendees
Lindsey Baker, Director of Government Affairs
Athena Forrester, Assistant Vice President of Regulatory Compliance/DBE Liaison
Ann Boulden, Director of Capital Development
Tim Palermo, Senior Regional Planner
Troy Raley, Director of Bus Operations/Maintenance
Amanda Riddle, Senior Manager of Budget
Whitney Trayler, Grants Manager
Javier Trilla, Director of Information Technology
Kyler Hagler, Network Administrator
Adam Wells, Desktop and Application Support Specialist
Rusty Comer, Manager of Bus Administration
Amber Karkauskas, Controller
Christa Christian, Senior Procurement Specialist
Geraldine Osinaike, Procurement Specialist
John Duffy, Financial Analyst
Katie Cruze, Receptionist
Linda Blakely, Executive Assistant/Office Coordinator
Mary Worthington, Community Relations Manager
Sarah Martinez, Director of Procurement
Mackenzie Armendariz, Human Resources Manager
Rose Jerome, Project Controls Coordinator
Sarah Hultquist, Mobility Services Coordinator
Jennifer Lovelady, Human Resources Assistant
Brandy Pedron, Executive Administrator

Public Attendees
Claire Powell, Lewisville Alternate
Paul Cristina, Denton County Alternate
John Hendrickson, Hendrickson Transportation
RJ Garza, NTMC Contract General Manager
Paula Richardson, ATU
Albert Dirla
Kristal Gay
Peggy Heinkel-Wolfe, DRC
Chris Newport, Accenture
Louis Litten, Herzog
Omar Pena
Brandi Bird, Bird Advocacy & Consulting
Joyce

CALL TO ORDER – *Chair Costa called the meeting to order and announced the presence of a quorum at 10:08 am. NTMC Vice Chair Hayes call the NTMC meeting to order and announced the presence of a quorum at 10:08 am.*

INNVOCATION – *Chris Watts led the Meeting in Prayer.*

NAVIGATION TO THE ZOOM MEETING – Deputy CEO Holcomb gave attendees a brief navigation to the meeting.

PUBLIC COMMENT – *Paula Richardson, ATU and Albert Dirla addressed the Board with public comment at this time.*

WORKSHOP – *The DCTA and NTMC Board of Directors held a joint workshop and discussed the following: Review DCTA's Initial Intent for NTMC; Discuss DCTA's Long Term Options for NTMC; Discuss DCTA & NTMC Board Workflow; Discuss Outstanding Items: Certificate of Formation Modification, Bylaw Modification, General Manager RFP; and DCTA Direction for NTMC Board*

[Board Chair Costa made a motion to recess the meeting for short break at 10:52 am. The time of recess expired, and the meeting resumed at 11:05 am.]

- *DCTA Board Member, Cesar Molina, recommended the DCTA Board give the NTMC Board recommendations to pause on moving forward with changes to the NTMC Bylaws and Certificate of Formation and that the DCTA Board direct the DCTA staff to rewrite the Interlocal Agreement (ILA) so that it matches what they want NTMC's role to be and then bring back to the DCTA Board for review and approval before holding another Joint meeting with both Boards to communicate the ILA changes.. Both the DCTA Board and NTMC Board members all agreed.*

[Motion to adjourn the NTMC Board meeting was made by Vice Chair Hayes and seconded by Don Combs. All in favor. The NTMC Board meeting was adjourned at 12:54 p.m.]

CONVENE EXECUTIVE SESSION – *The Board convened into executive session at 12:56 pm for the following:*

A. As Authorized by Section 551.072 of the Texas Government Code, the Board of Directors Meeting may be Convened into Closed Executive Session for the Purpose of Deliberation regarding Real Property: Discuss acquisition, sale or lease of real property related to long-range service plan within the cities of Denton, Lewisville, Highland Village, or the A-train corridor.
B. As Authorized by Section 551.074 of the Texas Government Code, the Board Meeting may be Convened into Closed Executive Session for Deliberation of Personnel: Annual CEO's Performance Review.

[Board Member, Chris Watts departed the meeting around 1:55 p.m.]

RECONVENE OPEN SESSION – *The Board reconvened into open session at 3:20 pm. The following actions were taken:*

- *Vice Chair Gilmore moved that the Chief Executive Officer and any other officer of the Authority be authorized to sign on behalf of DCTA the agreement presented to the Board this day to purchase Lot 1, Block A, Elm Fork Industrial Park, an Addition to the City of Lewisville, Texas, for a purchase price not to exceed $2,300,000.00 plus all closing and other acquisition costs, including, but not limited to, relocation costs required by state and federal law, and to sign such other agreements, documents, and any amendments thereto, as the Chief Executive Officer, in consultation with the General Counsel, deems reasonable and necessary with respect to the closing of said transaction. Vice Chair Gilmore further moved that the DCTA's budget for the Fiscal Year 2019-2020 be amended*

in the manner recommended this date by the Chief Executive Officer to provide for current funds for the purchase of the above-described property. The motion was seconded by Cesar Molina. All board members voted yes; with the exception of Chris Watts who was not present for the vote. Motion passed unanimously by the Board with no abstentions.

- *A Motion to approve an amendment to Raymond Suarez employment agreement to extent the term of employment through September 13, 2023 and increase the severance to nine (9) months and further authorize Dianne Costa to execute the amendment was made by Secretary Burke. The motion was seconded by Cesar Molina. All board members voted yes; with the exception of Chris Watts who was not present for the vote. Motion passed unanimously by the Board with no abstentions.*

In the essence of time, the Board held the remainder of the agenda items out of order. The order they were addressed is outlined below:

REGULAR AGENDA

2. Corinth Station Concept Planning and Performance Study - *The Board received an update regarding the recent Corinth Station Concept Planning and Performance Study conducted by Lockwood, Andrews and Newnam, Inc. (LAN).*
    - *Vice Chair Gilmore requested additional data: anticipated ridership changes and a schedule-per-schedule on how DCTA would sync with DART*

[Board Member, Chris Watts returned to the meeting at 3:47 p.m.]

CONSENT AGENDA

1. Approval of MAY 27, 2020 Minutes

2. Approval of Monthly Financial Statements for May 2020
    - *A Motion to approve Consent Agenda item 1 and 2 as presented was made by Secretary Burke. The motion was seconded by Vice Chair Gilmore. All board members voted yes. Motion passed unanimously by the Board with no abstentions.*

REGULAR AGENDA (continued)

10. Consider Award of RFP 20-14 for Sales and Use Tax Review Services - *A request for proposals was issued on May 8, 2020, seeking qualified firms to perform a review of DCTA's sales/use tax remittances and related information to ensure that DCTA is receiving all the sales taxes to which it is entitled. Six thousand, six hundred, seventy-five (6,675) entities were successfully invited to view the documents on the electronic procurement platform used by DCTA. On May 26, 2020, DCTA received four (4) proposals in response to the RFP: Avenu Insights and Analytics, LLC; Azavar Government Solutions; HdL Companies; TriStem, Ltd. Staff conducted a review and evaluation of the proposals and is recommending award to HdL Companies. Work to be performed includes identifying any misallocations, reporting errors, or other factors causing DCTA to receive less than the proper amount of taxes due. Consultant will be asked to document and report findings and to perform any necessary analysis and other work that will help ensure that DCTA is realizing all the sales tax revenue to which it is entitled. Consulting services including forecasting, legislative and regulatory policy tracking, and analysis will also be included in the service. DCTA has contracted for Sales and Use Tax Review services for the last five years. The agreement is for a three (3) year term commencing September 1, 2020, through and including August 31, 2023, with the option to renew for two (2) additional one (1) year*

terms. The total anticipated cost for the contract includes flat fees of $36,000 over the five (5) year term or $7,200 per year plus a 22.5% fee on recovered (past) and increased (prospective) sales taxes. Staff recommended the Board approve the award of Sales and Use Tax Review services and authorize the CEO to execute a contract with HdL Companies.

- *A Motion to approve Regular Item 10 was made by Chris Watts. The motion was seconded by Secretary Burke. All board members voted yes. Motion passed unanimously by the Board with no abstentions.*

11. Consider Approval of Resolution R20-11 Appointing a Board of Director's ADA Liaison to the Access Appeal Panel - *With the resignation of former Board Member Dave Kovatch who previously served as the Board of Director's ADA Liaison, there is a current vacancy on the Access Appeal Panel. In addition, according to the AAP policy, the appointed ADA Liaison reserves the right to designate a DCTA staff member to serve in his or her absence. Staff recommended the Board consider making an appointment to fill the vacant seat of the Board of Director's ADA Liaison and designate Nicole Recker, VP of Mobility Services & Administration to serve in his/her absence.*
    - *Chair Costa nominated Cesar Molina to fill the vacant seat of the Board of Director's ADA Liaison and designated Nicole Recker, VP of Mobility Services & Administration to serve in his absence. A Motion to approve the nominations as outlined was made by Chair Costa. The motion was seconded by Chris Watts. All board members voted yes. Motion passed unanimously by the Board with no abstentions.*

12. Consider Award of Web Services Contract - *A request for proposals was issued on February 12, 2020, seeking firms to provide a range of web services to support DCTA's website, blog, e-commerce solution, PCI compliance and security (PCI compliance and security refer to encryption requirements and secure processing of credit cards). One hundred and thirty (130) entities viewed the documents on the electronic procurement platform used by DCTA. On March 12, 2020, DCTA received five (5) proposals in response to the RFP: American Eagle; HCK2; Inreact; Park Circle; and Planeteria Media. Staff conducted a review and evaluation of the proposals and is recommending award to Planeteria Media. The agreement is for a three (3) year term with the option to renew for two (2), one (1) year terms. The total anticipated cost for the contract is not to exceed $200,000, over the five (5) year term, if all terms are exercised. Annual departmental budgets are incorporated into each fiscal year's budget. Staff recommended the Board approve the award of Digital Web Services in the amount of $200,000 and authorize the CEO to execute a contract with Planeteria Media.*
    - *A Motion to approve Regular Item 12 was made by Secretary Burke. The motion was seconded by Chair Costa. All board members voted yes. Motion passed unanimously by the Board with no abstentions.*

13. Consider Award of MaaS Task Order #1: Lakeway Zone and Denton Evening Zone - *The Lakeway Zone began as a pilot program on January 14, 2019, replacing a portion of existing Lewisville Connect Route 21 in the Lakeway Business Park area. On September 15, 2019, the program went live as a normal DCTA zone. On March 23, 2020, additional evening zones were created to supplement fixed route bus service in order to allow for connections with DCTA's A-train and last-mile connections. The Task Order is for a two (2) year term, commencing September 14, 2020 through September 30, 2022, with the option to renew for one (1) term ending September 30, 2024. The total anticipated cost for the contract is not to exceed $50,000 per year, over the four-year term, if the option period is exercised. The task order will be funded from the Operating Budget. Annual departmental budgets are incorporated into each fiscal year's budget. DCTA staff recommended the Board approve and authorize the CEO to execute the MaaS Task Order #1 Lakeway Zone to Spare Labs, Inc. in the amount not to exceed $50,000, per year.*
    - *Vice Chair Gilmore requested ridership data on this item.*

- *A Motion to approve Regular Item 13 was made by Vice Chair Gilmore. The motion was seconded by Chair Costa. All board members voted yes. Motion passed unanimously by the Board with no abstentions.*

14. Consider Approval of Fourth Amendment to the City of McKinney MUTD Interlocal Agreement - *At the April 23, 2020 board meeting the DCTA Board of Directors approved an extension to the City of McKinney contracted service agreement, originally expiring May 31, 2020, to July 31, 2020. DCTA coordinated new contract terms in line with the agency's Cost Allocation Model and Administrative Fee Policy. The MUTD Board of Directors held a meeting on June 17 at which they considered and approved a proposed fourth amendment to the City of McKinney/DCTA ILA through December 31, 2020, inclusive of the cost allocation administrative fee. The proposed fourth amendment and associated exhibits were provided in the packet. The proposed fourth amended ILA also includes a programmatic revision. At the April MUTD Board meeting, they received a presentation from Spare Labs, who conducted a rate analysis to propose a new rate structure. As a result, the MUTD Board approved a rate change to a $3 flat fare for future services. The City of McKinney included this change in the fourth amended ILA. In addition to the proposed fourth amendment, the MUTD Board authorized city staff to issue an RFQ for transit services contingent upon the DCTA Board of Directors approval of the fourth Amended ILA and extension. All related fees have been incorporated into the new contract terms per Exhibit A in the Proposed Fourth Amendment.*
    - *A Motion to approve Regular Item 14 was made by Chair Costa. The motion was seconded by Secretary Burke. All board members voted yes. Motion passed unanimously by the Board with no abstentions.*

INFORMATIONAL REPORTS – *The following information reports were presented to the Board in the Board Packets for review.*

1. Monthly Financial Reports - *Sales tax represents the single largest source of revenue for DCTA at 52.46% for the Fiscal Year 2020 budget. The annual revised sales tax budget for FY20 is $21,464,452. Because of its importance in funding of DCTA's ongoing operations, the Board adopted a Budget Contingency Plan that outlines the Agency's response when declines in sales tax hit a specific target. For the month of June, receipts were favorable compared to the revised budget. Sales tax for sales generated at retail in the month of April and received in June was $2,185,555. This represents an increase of 84.63% or $1,001,824 compared to budget for the month. Compared to the same month last year, sales tax receipts are $298,886 or 12% lower. Member city collections for the month compared to prior year are as follows: City of Lewisville down 13.45%; City of Denton down 14.38%; City of Highland Village down 12.17%.*
   As requested by the Board of Directors, staff is providing a monthly update on all Mobility-as-a-Service commitments, activities and expenses. No task orders have been issued to date.
   There were no budget transfers completed in the month of May to report, other than the budget revision presented to and approved by the Board of Directors at the May Board meeting.

2. Information Requested by Board Members at the April Board Meeting - *The following information was provided per the request of Board Members at the April Board Meeting: Contracted Service Agreements Monthly Progress Report; and Five Year History of Efforts to Drive Ridership.*

REGULAR AGENDA (continued)

1. Coronavirus (COVID-19) Response Update – *This item was not discussed.*

3. Mobility as a Service (MaaS) Task Order for Member City Services – *Raymond Suarez led a brief discussion regarding the initiation of a task order to deploy on-demand services within member cities with anticipated service strategy recommendations by August.*

4. Transformation Initiative Executive Summary – *Nicole Recker led a brief discussion regarding this item leading into items 5 and 6 on the agenda.*

5. Consider Approval of Resolution R20-09 Approving FY20 Budget Revision 2020-05 for Task Order 1 and Transformation Initiative Consultant – *Marisa Perry provided an overview of the item. The Transformation Initiative is an agency-wide study to help the DCTA Board of Directors develop a cohesive vision for DCTA's future, improve operations, address perceived concerns, and respond to evolving markets, technology and consumer preferences. DCTA's Financial Management Policies require approval of a Board resolution to authorize a budget amendment that increases the total adopted fiscal year budget. The total budget impact of Budget Revision 2020-05 is an increase to the operating budget of $667,000. The Transformation Initiative board-appointed evaluation committee recommended the Board of Directors approve Resolution R20-09 approving Budget Revision 2020-05 for the FY 2020 operating budget.*
    - *A Motion to approve Regular Item 5 awarding the Contract and modifying the Budget without money spent until the Scope of Services is reviewed by the Board and not to exceed $667,000, as stated by Secretary Burke, was made by Vice Chair Gilmore. The motion was seconded by Cesar Molina. All board members voted yes. Motion passed unanimously by the Board with no abstentions.*

6. Consider Approval of Agency Transformation Initiative Consultant and Task Order 1
    - *A Motion to authorize the CEO to negotiate and enter into an agreement was made by Secretary Burke. The motion was seconded by Vice Chair Gilmore. All board members voted yes. Motion passed unanimously by the Board with no abstentions.*

7. August Service Change Overview – *Nicole Recker led a brief discussion of the information provided in the presentation for this item. This item will be brought to the July Board Meeting for approval.*
    - *Vice Chair Gilmore requested staff to provide data on the cost savings between 30- and 60-minute headways.*

8. Hazard/Hero Pay Options – *Information for this item was provided to the Board in the presentation and will be sent out in the Friday email.*

9. Lakeway Administration Building Lease Extension – *Kristina Holcomb gave a brief overview and recommended approval of the ILA for maintenance of the A-train Rail Trail in the City of Lewisville.*
    - *A Motion to approve City of Lewisville Trail Maintenance Agreement was made by Vice Chair Gilmore. The motion was seconded by Chris Watts. All Board members voted in favor. Motion carries and is passed unanimously by the Board with no abstentions.*

10. Consider Approval of Train the Trainer Task Order – *Nicole Recker asked the Board to review the information on this item provided in the presentation on page 77. Staff will bring the contract to the July Board Meeting for approval. The terms in the extension were set based on the existing contract; it is not a negotiation, but an extension.*

15. Discussion of Regional Transportation and Legislative Issues – *Chair Costa briefly noted that staff would be bringing forward discussions on the development of a formal legislative program for the 87th legislative session.*

FUTURE AGENDA ITEMS AND BOARD MEMBER REQUESTS

- *Kristina Holcomb notified the Board that the Friday Email will be sent on Monday, July 29.*

REPORT ON ITEMS OF COMMUNITY INTEREST – *This item was not discussed.*

ADJOURN – *Motion to adjourn the meeting was made by Chris Watts and seconded by Vice Chair Gilmore. All in favor. The meeting was adjourned at 5:21 p.m.*

The minutes of the June 25, 2020 Board of Directors Meeting were passed and approved by a vote on this 23rd day of July 2020.

_____
Dianne Costa, Chair

ATTEST

_____
Sam Burke, Secretary

Board of Directors Memo

July 23, 2020

SUBJECT: Monthly Financial Statements for June 2020

Background

The financial statements are presented monthly to the Board of Directors for acceptance. The reports presented for the period ending June 30, 2020 include the Statement of Change in Net Position, Statement of Net Position, and Capital Projects Fund. These reports provide a comparison of budget vs. actual for the fiscal year as of the current month.

The following are major variances between year-to-date budget and year-to-date actuals, which are annotated on the Statement of Change in Net Position.

- **Note A:** Passenger Revenues – YTD favorable by $4k mainly due to Connect ridership of 300k which is 10% more than revised budgeted ridership of 274k. YTD FY20 rail ridership of 199k is 24% less than budgeted ridership of 262k, and overall bus ridership of 1.2 million is 29% less than budgeted ridership of 1.8 million. Ridership remained under budget throughout the month of June as employers sustained telecommuting arrangements, though implementation phases of reopening businesses throughout the State started in response to COVID-19.

		YTD FY20 Actual Ridership	YTD FY20 Budgeted Ridership	% Variance, Actual to Budget	YTD FY19 Actual Ridership	% Variance, Actual to Prior Year
Total Rail Ridership		198,833	262,343	-24%	297,645	-33%
Connect		299,511	273,515	10%	407,121	-26%
Access & Zone Service		24,403	21,890	11%	28,289	-14%
Frisco	(A)	5,052	3,865	31%	8,566	-41%
Collin County Transit	(A)	8,790	1,647	434%	7,647	15%
North Texas Xpress		6,857	8,264	-17%	8,464	-19%
University of North Texas	(B)	891,100	1,442,445	-38%	1,428,135	-38%
North Central Texas College	(B)	5,784	9,814	-41%	9,669	-40%
Special Movements	(B)	4,782	-	N/A	55,321	-91%
Total Bus Ridership		1,246,279	1,761,440	-29%	1,953,212	-36%
Trail Utilization	(B)	72,091	-	N/A	-	N/A
Vanpool	(B)	94,428	-	N/A	83,503	13%
Total Ridership		1,611,631	2,023,783	-20%	2,334,360	-31%

(A) Includes Demand Response service and Taxi service.
(B) These ridership numbers are not linked to passenger revenues and are shown for information purposes only to include all system ridership. Please note Trail Utilization now reflects YTD FY20 activity.

- **Note B:** Contract Service Revenue – YTD unfavorable by $642k primarily due to lower than budgeted revenue hours and lower than budgeted billable fuel costs. Actual YTD billed hours of 34k were 15% lower than budgeted 40k hours ($401k decreased revenue). Average YTD pass-through fuel cost is $1.90/gallon compared to budgeted $3.00/gallon and YTD usage of 83k gallons is 22% lower than budgeted usage of 107k gallons ($163k decreased revenue). Additionally, Special Movements, Lyft, and Taxi services were all under budget ($78k decreased revenue).

- **Note C:** Sales Tax Revenue – June sales tax revenue is not yet received and is accrued for the month based on budget. Sales tax generated in June will be received in August. The Sales Tax Report included in this agenda packet provides a more detailed Budget to Actual comparison of sales tax receipts collected through July, representing sales tax generated through May.

- **Note D:** Federal/State Grants - Capital – YTD favorable by $470k due to PTC project reimbursements being received earlier than anticipated in the budget.

	YTD FY20 Actual Revenue	YTD FY20 Budgeted Revenue	Variance, Actual to Budget
Positive Train Control (PTC)	$ 424,110	$ 20,000	$ 404,110
Safety & Security	66,155	-	66,155
Hike & Bike Trail – Eagle Point	438,548	438,548	-
	$ 928,813	**$ 458,548**	**$ 470,265**

- **Note E:** Federal/State Grants - Operating – YTD unfavorable by $2.2 million mainly due to timing differences of Operating and ADA Assistance funding. The next annual Program of Projects funding is expected later in the fiscal year, at which point Operating and ADA Assistance reimbursements will be requested.

	YTD FY20 Actual Revenue	YTD FY20 Budgeted Revenue	Variance, Actual to Budget
Bus Preventive Maintenance	$ 1,056,971	$ 1,036,314	$ 20,657
Rail Preventive Maintenance	1,885,731	2,007,873	(122,142)
Bus Operating Assistance	-	2,000,000	(2,000,000)
ADA Assistance	256,569	501,166	(244,597)
Vanpool	135,290	90,000	45,290
NCTCOG Trainer the Trainer	3,073	-	3,073
NCTCOG NTX 35W JARC	68,162	-	68,162
	$ 3,405,796	**$ 5,635,353**	**$ (2,229,557)**

Identified Need

Provides the Board a review of DCTA's financial position and the agency's performance to budget.

Recommendation

Staff recommends approval.

Exhibits

Exhibit 1(a): Monthly Financial Statements – June 2020
Exhibit 1(b): Capital Projects Budget Report – June 2020

Submitted by: _____
Amber Karkauskas
Controller

Final Review: _____
Marisa Perry, CPA
Chief Financial Officer/VP of Finance

DCTA

DENTON COUNTY TRANSPORTATION AUTHORITY

CHANGE IN NET POSITION
MONTH AND YEAR TO DATE JUNE 30, 2020
(UNAUDITED)

	Month Ended June 30, 2020			Year to Date June 30, 2020				
Description	Actual	Budget	Variance	Actual	Budget	Variance	Annual Budget	
Revenue and Other Income								
Passenger Revenues	$ 36,227	$ 21,972	$ 14,255	$ 716,370	$ 711,885	$ 4,485	$ 792,169	**Note A**
Contract Service Revenues	130,174	236,095	(105,921)	2,674,997	3,317,113	(642,116)	4,416,160	**Note B**
Sales Tax Revenues	2,597,270	1,230,599	1,366,671	20,407,566	18,043,839	2,363,727	21,464,452	**Note C**
Federal/State Grants - Capital	148,382	-	148,382	928,813	458,548	470,265	3,788,325	**Note D**
Federal/State Grants - Operating	148,776	1,299,339	(1,150,563)	3,405,796	5,635,353	(2,229,557)	12,400,872	**Note E**
Total Revenues and Other Income	3,060,829	2,788,005	272,824	28,133,542	28,166,738	(33,196)	42,861,978	
Operating Expenses								
Salary, Wages and Benefits	400,516	355,352	(45,164)	3,468,886	3,593,394	124,508	4,659,734	
Outsourced Services and Charges	196,562	320,969	124,407	1,666,190	2,830,308	1,164,118	4,472,477	
Materials and Supplies	86,020	244,970	158,950	1,560,909	1,869,774	308,865	2,554,461	
Utilities	37,181	42,498	5,317	284,775	363,482	78,707	490,988	
Insurance	144,382	146,024	1,642	1,245,341	1,314,216	68,875	1,752,329	
Purchased Transportation Services	792,431	825,513	33,082	7,411,912	7,794,583	382,671	10,271,634	
Employee Development	35,630	47,977	12,347	148,276	242,360	94,084	296,935	
Leases and Rentals	19,217	19,162	(55)	162,055	172,213	10,158	229,633	
Depreciation	798,173	904,765	106,592	7,175,714	7,899,809	724,095	10,612,052	
Total Operating Expenses	2,510,113	2,907,230	397,117	23,124,058	26,080,140	2,956,082	35,340,243	
Income Before Non-Operating Revenues and Expenses	550,716	(119,225)	669,941	5,009,484	2,086,598	2,922,886	7,521,735	
Non-Operating Revenues / (Expense)								
Investment Income	(6,394)	18,333	(24,727)	301,978	269,997	31,981	325,000	
Gain (Loss) on Disposal of Assets	-	-	-	-	-	-	-	
Fare Evasion Fee	-	83	(83)	-	747	(747)	1,000	
Other Income - Miscellaneous	5,255	-	5,255	144,525	51,000	93,525	51,000	
Long Term Debt Interest/Expense	(75,781)	(75,790)	9	(681,791)	(682,110)	319	(909,480)	
Total Non-Operating Revenues / (Expenses)	(76,919)	(57,374)	(19,545)	(235,288)	(360,366)	125,078	(532,480)	
Income (Loss) before Transfers	473,796	(176,599)	650,395	4,774,196	1,726,232	3,047,963	6,989,255	
Transfers Out	(375,063)	(528,248)	153,185	(5,858,760)	(6,276,857)	418,097	(8,000,347)	
Total Transfers	(375,063)	(528,248)	153,185	(5,858,760)	(6,276,857)	418,097	(8,000,347)	
Change in Net Position	$ 98,733	$ (704,847)	$ 803,580	$ (1,084,564)	$ (4,550,625)	$ 3,466,061	$ (1,011,092)	

DCTA

DENTON COUNTY TRANSPORTATION AUTHORITY

STATEMENT OF NET POSITION
AS OF JUNE 30, 2020
(UNAUDITED)

	June 30, 2020	May 31, 2020	Change
Assets			
Current Assets			
Operating Cash & Cash Equivalents	$ 16,732,219	$ 10,740,802	$ 5,991,417
Reserves: Cash & Cash Equivalents	8,916,258	13,098,155	(4,181,898)
Reserves: Investments	5,084,334	5,103,849	(19,515)
Accounts & Notes Receivable	5,254,785	6,064,786	(810,002)
Prepaid Expenses	472,814	612,444	(139,630)
Inventory	30,037	25,211	4,826
Restricted Asset-Cash and Equivalents	2,530,043	2,529,644	399
Total Current Assets	39,020,490	38,174,892	845,598
Non-Current Assets			
Land	17,394,147	17,394,147	-
Land Improvements	11,953,783	11,953,783	-
Machinery & Equipment	5,202,014	5,202,014	-
Vehicles	93,020,696	93,020,696	-
Computers & Software	1,387,627	1,387,627	-
Intangible Assets	16,997,155	16,997,155	-
Construction in Progress	19,261,232	18,955,741	305,492
Other Capital Assets, Net	234,616,978	234,616,978	-
Accumulated Depreciation	(84,772,367)	(83,974,194)	(798,173)
Total Non-Current Assets	315,061,264	315,553,945	(492,681)
Total Assets	**354,081,754**	**353,728,837**	**352,917**
Deferred Outflow of Resources			
Deferred Outflows Related to Pensions	369,652	369,652	-
Total Deferred Outflow of Resources	369,652	369,652	-
Liabilities			
Current Liabilities			
Accounts Payable and Accrued Expenses	534,273	352,242	182,031
Deferred Revenues	63,049	66,677	(3,628)
Interest Payable	227,342	151,561	75,781
Retainage Payable	623,545	623,545	-
Total Current Liabilities	1,448,209	1,194,025	254,183
Non-Current Liabilities			
Rail Easement Payable	900,000	900,000	-
Bonds Payable	25,230,000	25,230,000	-
Net Pension Liability	109,285	109,285	-
Total Non-Current Liabilities	26,239,285	26,239,285	-
Total Liabilities	**27,687,494**	**27,433,310**	**254,183**
Deferred Inflow of Resources			
Deferred Inflows Related to Pensions	47,683	47,683	-
Total Deferred Inflow of Resources	47,683	47,683	-
Net Position			
Net Investment in Capital Assets	293,688,041	293,688,041	-
Unrestricted	34,112,752	34,112,752	-
Change in Net Position	(1,084,564)	(1,183,297)	**98,733**
Total Net Position	$ 326,716,229	$ 326,617,496	$ 98,733

NORTH TEXAS MOBILITY CORPORATION

CHANGE IN NET POSITION
MONTH AND YEAR TO DATE JUNE 30, 2020
(UNAUDITED)

	Month Ended June 30, 2020			Year to Date June 30, 2020			
Description	Actual	Budget	Variance	Actual	Budget	Variance	Annual Budget
Operating Expenses							
Salary, Wages and Benefits	$ 342,225	$ 490,086	$ 147,861	$ 5,647,860	$ 5,922,370	$ 274,510	$ 7,531,382
Outsourced Services and Charges	22,938	22,220	(718)	108,191	194,969	86,778	261,629
Insurance	9,748	11,052	1,304	87,724	99,468	11,744	132,636
Employee Development	151	4,890	4,739	14,984	60,050	45,066	74,700
Total Operating Expenses	375,063	528,248	153,185	5,858,760	6,276,857	418,097	8,000,347
Income (Loss) before Transfers	(375,063)	(528,248)	153,185	(5,858,760)	(6,276,857)	418,097	(8,000,347)
Transfers In	375,063	528,248	(153,185)	5,858,760	6,276,857	(418,097)	8,000,347
Total Transfers	375,063	528,248	(153,185)	5,858,760	6,276,857	(418,097)	8,000,347
Change in Net Position	$ -	$ -	$ -	$ -	$ -	$ -	$ -

NORTH TEXAS MOBILITY CORPORATION

STATEMENT OF NET POSITION
AS OF JUNE 30, 2020
(UNAUDITED)

	June 30, 2020	May 31, 2020	Change
Assets			
Operating Cash & Cash Equivalents	$ 276,905	$ 275,666	$ 1,239
Accounts & Notes Receivable	1,725	1,725	-
Prepaid Expenses	29,216	38,964	(9,748)
Total Assets	307,846	316,355	(8,509)
Liabilities			
Accounts Payable and Accrued Expenses	307,846	316,355	(8,509)
Total Liabilities	307,846	316,355	(8,509)
Net Position			
Change in Net Position	-	-	-
Total Net Position	$ -	$ -	$ -

DENTON COUNTY TRANSPORTATION AUTHORITY
CAPITAL PROJECT FUND
AS OF JUNE 30, 2020

Capital Project Number/Name	Project Budget	June 2020 Actuals Booked	Actuals Life To Date	$ Under/ (Over) Budget	% of Budget (As of June 2020 Close)
Construction Work in Progress					
G&A Capital Projects					
Total 10302 · Infrastructure Acquisition	$ 3,251,990	$ 29,860	$ 296,036	$ 2,955,954	9%
Total 10403 · Server/Network Infrastructure	350,000	6,492	333,128	16,872	95%
Total G&A Capital Projects	**3,601,990**	**36,352**	**629,164**	**2,972,826**	**17%**
Bus Capital Projects					
Total 50306 · Major Maintenance - Bus	125,000	46,925	74,925	50,075	60%
Total 50411 · Integrated Fare Payment	600,000	-	-	600,000	0%
Total 50513 · Fleet {2019}	1,481,000	-	-	1,481,000	0%
Total 50514 · Fleet {2020}	1,062,600	-	-	1,062,600	0%
Total Bus Capital Projects	**3,268,600**	**46,925**	**74,925**	**3,193,675**	**2%**
Rail Capital Projects					
Total 61406.1 · Positive Train Control Implementation	16,720,141	184,631	15,816,841	903,300	95%
Total 61406.2 · Positive Train Control Enhancements	5,000,000	-	134,174	4,865,826	3%
Total 61409 · Stadler Diagnostic Laptops	80,000	-	-	80,000	0%
Total 61605 · Brownfield Remediation	385,000	2,730	322,436	62,564	84%
Total 61715 · Trail Safety Improvements	181,157	-	136,082	45,075	75%
Total 61720 · Major Maintenance - Rail	2,024,826	34,854	1,100,729	924,097	54%
Total 61722 · Safety & Security Improvements 2020	200,000	-	11,600	188,400	6%
Total Rail Capital Projects	**24,591,124**	**222,214**	**17,521,862**	**7,069,262**	**71%**
Total Construction Work in Progress	**$ 31,461,714**	**$ 305,492**	**$ 18,225,951**	**$ 13,235,763**	**58%**

HilltopSecurities Asset Management

Investment Portfolio Summary

Denton County Transportation Authority

DCTA

For the Quarter Ended

June 30, 2020

Prepared by
HilltopSecurities Asset Management

HilltopSecurities
Asset Management

Table of Contents / Market Recap

Report Name

Certification Page

Executive Summary

Benchmark Comparison

Detail of Security Holdings

Change in Value

Earned Income

Investment Transactions

Amortization and Accretion

Projected Fixed Income Cash Flows

MARKET RECAP - JUNE 2020:

Last month in our summary for May we wrote, "Phrases such as the "steepest decline ever" and the "worst in history" will apply to almost every piece of April economic data." The opposite will be true for June as the economic reopening that started in May resulted in significant rebounds that in many cases were the "biggest gain in history." We would, however, caution readers not to put too much stock into the big jumps in the monthly data as things had gotten so bad in April and May they just had to get better. And, despite the improvement evident in much of the economic data, we are nowhere near the levels that prevailed prior to the COVID-19 mandated shutdowns. The employment data is the most obvious place to start as non-farm payrolls grew by a stunning 2.5 million in May. The largest monthly gain in the history of this series going back to 1939 wildly surpassed the consensus forecast for a *loss* of 7.5 million jobs, and yet was only a tenth of the 22 million jobs lost in March and April. The unemployment rate, expected to climb to 19%, actually declined to 13.3%. The ISM surveys perked up as well with the manufacturing index climbing from 41.5 to 43.1 and the non-manufacturing index from 41.8 to 45.4. While both readings still indicated contraction, the improvement was viewed as a signal that the worst was behind us. Auto sales also topped expectations, rebounding from April's pitiful 8.6 million unit annual pace to 12.2 million. Consumer spending came roaring back in May, too, no doubt reflecting some pent up demand as consumers emerged en masse from the nationwide lockout and began spending at a furious pace. Sales surged +17.7% during May after a revised -14.7% April decline. Spending was brisk across all categories as it appears the government's response to the crisis has helped support consumer spending. Housing data for May was mixed as existing homes sales fell -9.7% to the lowest level since October 2010. However, since existing sales are measured at closing this data is more reflective of activity during March and April, when many buyers and sellers were in lockdown. By contrast, new home sales are measured when the contracts are signed and they climbed 16.6% during May.

The improving trend in economic data was countered in the later part of June by worrisome trends in COVID-19 data as states that had reopened to great fanfare around Memorial Day saw a dramatic surge in cases. Texas, Florida, and Arizona were hard hit, forcing renewed restrictions and closures as the Fourth of July holiday approached.

Equity markets focused on the positives and extended their rally, with the Dow Jones Industrial Average climbing +1.7% and the S&P 500 gaining +1.8% in June. The Nasdaq composite rose a remarkable +6%, hit a new record high, and is up +12.1% year-to-date as technology stocks have been a beneficiary of the stay at home economy. Bond markets were stable with slight declines of 1-2 basis points in yield across most tenors. The two-year T-note yield closed June at 0.15%, while both the three-year and five-year T-notes set record lows at 0.17% and 0.27% respectively on June 29th. The short end of the yield curve is likely to be anchored by Fed policy for years to come. All in all, it appears the recovery has begun in earnest, but it also appears likely that the path won't be smooth and the outlook is still very much dependent on the path of the virus.

Denton County Transportation Authority

Investment Officers' Certification

For the Quarter Ended

June 30, 2020

This report is prepared for the **Denton County Transportation Authority** (the "Entity") in accordance with Chapter 2256 of the Texas Public Funds Investment Act ("PFIA"). Section 2256.023(a) of the PFIA states that: "Not less than quarterly, the investment officer shall prepare and submit to the governing body of the entity a written report of the investment transactions for all funds covered by this chapter for the preceding reporting period." This report is signed by the Entity's investment officers and includes the disclosures required in the PFIA. To the extent possible, market prices have been obtained from independent pricing sources.

The investment portfolio complied with the PFIA and the Entity's approved Investment Policy and Strategy throughout the period. All investment transactions made in the portfolio during this period were made on behalf of the Entity and were made in full compliance with the PFIA and the approved Investment Policy.

Officer Names and Titles:

Name: Marisa Perry, CPA — Title: Chief Financial Officer/VP of Finance

Name: Raymond Suarez — Title: Chief Executive Officer

Denton County Transportation Authority

Executive Summary

As of 06/30/20

Account Summary

	Beginning Values as of 03/31/20	Ending Values as of 06/30/20
Par Value	30,128,305.41	33,521,911.66
Market Value	30,232,154.31	33,606,245.86
Book Value	30,183,181.05	33,568,044.74
Unrealized Gain /(Loss)	48,973.26	38,201.12
Market Value %	**100.16%**	**100.11%**
Weighted Avg. YTW	1.012%	0.365%
Weighted Avg. YTM	1.012%	0.365%

Allocation by Security Type

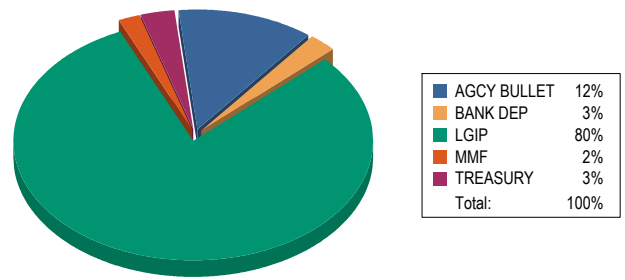

Allocation by Issuer

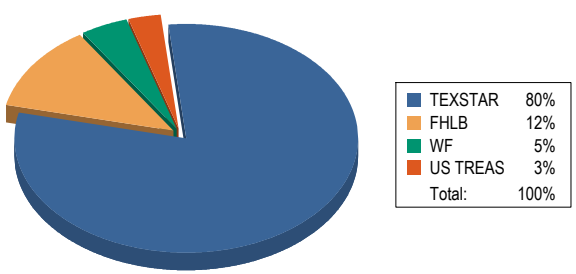

Maturity Distribution %

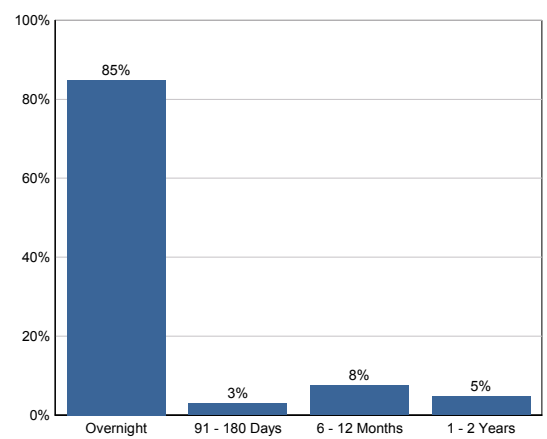

Weighted Average Days to Maturity: 51

Credit Quality

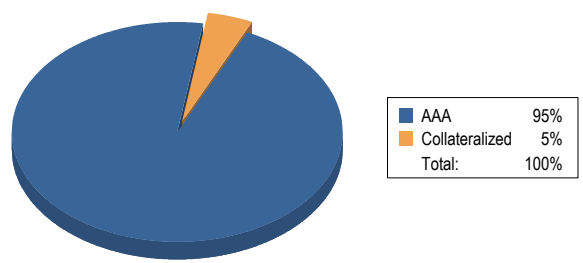

HilltopSecurities
Asset Management

Denton County Transportation Authority
Benchmark Comparison
As of 06/30/2020

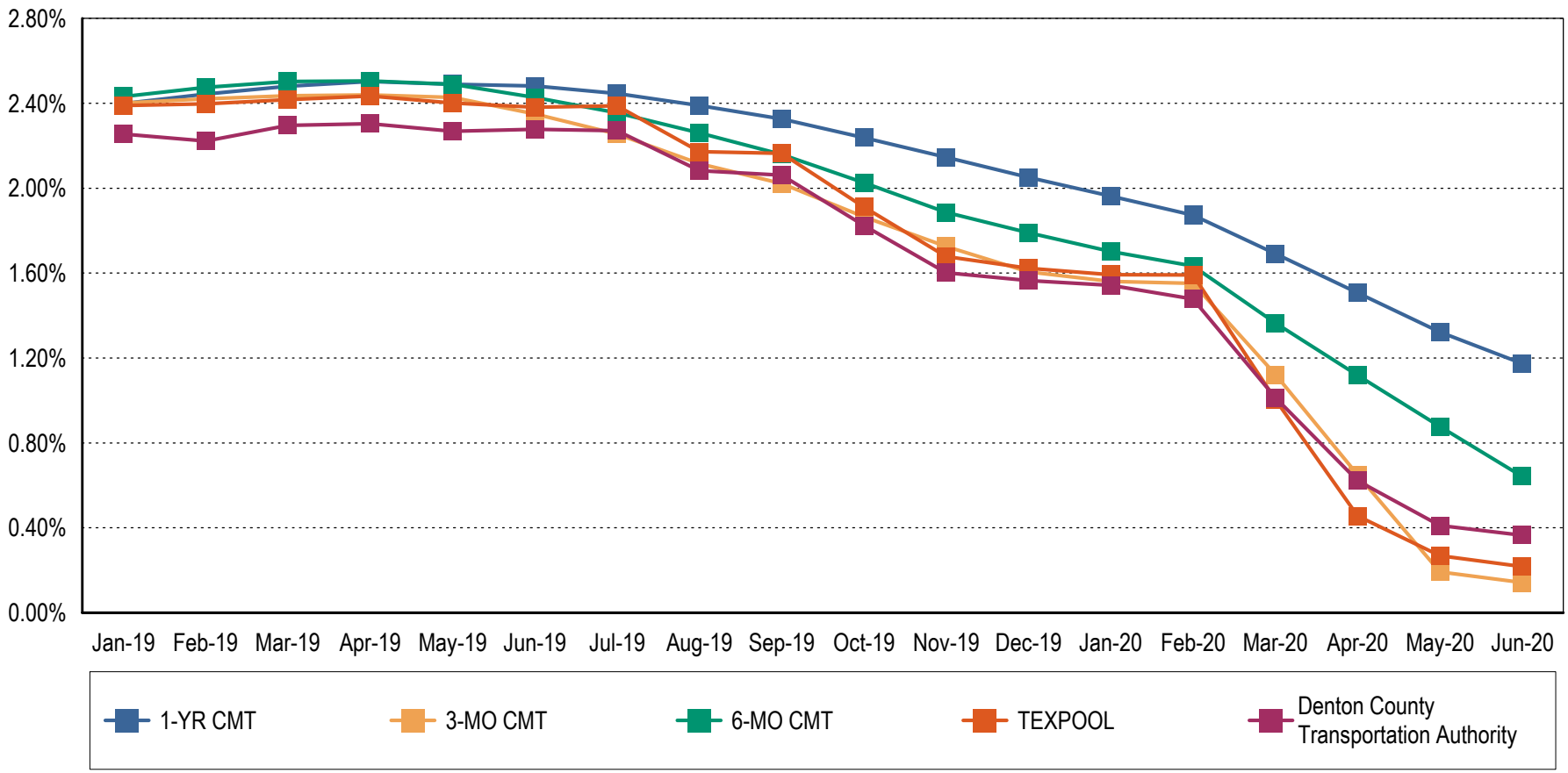

Note 1: CMT stands for Constant Maturity Treasury. This data is published in Federal Reserve Statistical Release H.15 and represents an average of all actively traded Treasury securities having that time remaining until maturity. This is a standard industry benchmark for Treasury securities. The CMT benchmarks are moving averages. The 3-month CMT is the daily average for the previous 3 months, the 6-month CMT is the daily average for the previous 6 months, and the 1-year and 2-year CMT's are the daily averages for the previous 12-months.

Note 2: Benchmark data for TexPool is the monthly average yield.

HilltopSecurities
Asset Management

Denton County Transportation Authority

Detail of Security Holdings

As of 06/30/2020

CUSIP	Settle Date	Sec. Type	Sec. Description	CPN	Mty Date	Next Call	Call Type	Par Value	Purch Price	Orig Cost	Book Value	Mkt Price	Market Value	Days to Mty	Days to Call	YTM	YTW
2011 Bond Fund																	
WF-MANA		BANK DEP	Wells Fargo Managed Rate					896,143.74	100.000	896,143.74	896,143.74	100.000	896,143.74	1		0.160	0.160
Total for 2011 Bond Fund								**896,143.74**	**100.000**	**896,143.74**	**896,143.74**	**100.000**	**896,143.74**	**1**		**0.160**	**0.160**
Additional Reserve Fund																	
TEXSTAR		LGIP	TexSTAR					675,599.79	100.000	675,599.79	675,599.79	100.000	675,599.79	1		0.197	0.197
Total for Additional Reserve Fund								**675,599.79**	**100.000**	**675,599.79**	**675,599.79**	**100.000**	**675,599.79**	**1**		**0.197**	**0.197**
Bond Fund																	
TEXSTAR		LGIP	TexSTAR					1,633,899.42	100.000	1,633,899.42	1,633,899.42	100.000	1,633,899.42	1		0.197	0.197
Total for Bond Fund								**1,633,899.42**	**100.000**	**1,633,899.42**	**1,633,899.42**	**100.000**	**1,633,899.42**	**1**		**0.197**	**0.197**
Operating Fund																	
WF-SWEEP		MMF	Wells Fargo Sweep					631,171.07	100.000	631,171.07	631,171.07	100.000	631,171.07	1		0.000	0.000
Total for Operating Fund								**631,171.07**	**100.000**	**631,171.07**	**631,171.07**	**100.000**	**631,171.07**	**1**		**0.000**	**0.000**
Reserve Fund																	
TEXSTAR		LGIP	TexSTAR					8,240,658.00	100.000	8,240,658.00	8,240,658.00	100.000	8,240,658.00	1		0.197	0.197
3130AEWA4	09/12/19	AGCY BULET	FHLB	2.625	10/01/20			1,000,000.00	100.836	1,008,360.00	1,001,996.50	100.613	1,006,132.60	93		1.819	1.819
3130A7CV5	02/14/20	AGCY BULET	FHLB	1.375	02/18/21			1,500,000.00	99.836	1,497,540.00	1,498,462.85	100.740	1,511,100.00	233		1.539	1.539
9128284G2	01/17/20	TREAS NOTE	U.S. Treasury	2.375	04/15/21			1,000,000.00	100.941	1,009,414.06	1,006,005.03	101.742	1,017,421.90	289		1.606	1.606
313378CR0	03/13/20	AGCY BULET	FHLB	2.250	03/11/22			1,500,000.00	103.110	1,546,650.00	1,539,668.70	103.312	1,549,679.70	619		0.677	0.677
Total for Reserve Fund								**13,240,658.00**	**100.476**	**13,302,622.06**	**13,286,791.08**	**100.645**	**13,324,992.20**	**128**		**0.633**	**0.633**

Denton County Transportation Authority

Detail of Security Holdings

As of 06/30/2020

CUSIP	Settle Date	Sec. Type	Sec. Description	CPN	Mty Date	Next Call	Call Type	Par Value	Purch Price	Orig Cost	Book Value	Mkt Price	Market Value	Days to Mty	Days to Call	YTM	YTW
Sales Tax Fund																	
TEXSTAR		LGIP	TexSTAR					16,444,439.64	100.000	16,444,439.64	16,444,439.64	100.000	16,444,439.64	1		0.197	0.197
Total for Sales Tax Fund								**16,444,439.64**	**100.000**	**16,444,439.64**	**16,444,439.64**	**100.000**	**16,444,439.64**	**1**		**0.197**	**0.197**
Total for Denton County Transportation Authority								**33,521,911.66**	**100.188**	**33,583,875.72**	**33,568,044.74**	**100.255**	**33,606,245.86**	**51**		**0.365**	**0.365**

HilltopSecurities Asset Management

Denton County Transportation Authority

Change in Value

From 03/31/2020 to 06/30/2020

CUSIP	Security Type	Security Description	03/31/20 Book Value	Cost of Purchases	Maturities / Calls / Sales	Amortization / Accretion	Realized Gain/(Loss)	06/30/20 Book Value	03/31/20 Market Value	06/30/20 Market Value	Change in Mkt Value
2011 Bond Fund											
WF-MANA	BANK DEP	Wells Fargo Managed Rate	895,786.34	357.40	0.00	0.00	0.00	896,143.74	895,786.34	896,143.74	357.40
Total for 2011 Bond Fund			**895,786.34**	**357.40**	**0.00**	**0.00**	**0.00**	**896,143.74**	**895,786.34**	**896,143.74**	**357.40**
Additional Reserve Fund											
TEXSTAR	LGIP	TexSTAR	571,982.01	103,617.78	0.00	0.00	0.00	675,599.79	571,982.01	675,599.79	103,617.78
Total for Additional Reserve Fund			**571,982.01**	**103,617.78**	**0.00**	**0.00**	**0.00**	**675,599.79**	**571,982.01**	**675,599.79**	**103,617.78**
Bond Fund											
TEXSTAR	LGIP	TexSTAR	1,632,682.59	1,216.83	0.00	0.00	0.00	1,633,899.42	1,632,682.59	1,633,899.42	1,216.83
Total for Bond Fund			**1,632,682.59**	**1,216.83**	**0.00**	**0.00**	**0.00**	**1,633,899.42**	**1,632,682.59**	**1,633,899.42**	**1,216.83**
Operating Fund											
WF-MANA	BANK DEP	Wells Fargo Managed Rate	0.00	0.00	0.00	0.00	0.00	0.00	0.00	0.00	0.00
WF-SWEEP	MMF	Wells Fargo Sweep	438,518.75	422,655.02	(230,002.70)	0.00	0.00	631,171.07	438,518.75	631,171.07	192,652.32
Total for Operating Fund			**438,518.75**	**422,655.02**	**(230,002.70)**	**0.00**	**0.00**	**631,171.07**	**438,518.75**	**631,171.07**	**192,652.32**
Reserve Fund											
TEXSTAR	LGIP	TexSTAR	11,416,287.32	1,006,377.95	(4,182,007.27)	0.00	0.00	8,240,658.00	11,416,287.32	8,240,658.00	(3,175,629.32)
WF-PREM	BANK DEP	Wells Fargo Premium Rate	0.00	0.00	0.00	0.00	0.00	0.00	0.00	0.00	0.00
912828X96	TREAS NOTE	U.S. Treasury 1.500 05/15/20	999,656.35	0.00	(1,000,000.00)	343.65	0.00	0.00	1,001,703.60	0.00	(1,001,703.60)
3130AEWA4	AGCY BULET	FHLB 2.625 10/01/20	1,003,993.01	0.00	0.00	(1,996.51)	0.00	1,001,996.50	1,011,381.60	1,006,132.60	(5,249.00)
3130A7CV5	AGCY BULET	FHLB 1.375 02/18/21	1,497,857.09	0.00	0.00	605.76	0.00	1,498,462.85	1,513,263.00	1,511,100.00	(2,163.00)
9128284G2	TREAS NOTE	U.S. Treasury 2.375 04/15/21	1,007,882.74	0.00	0.00	(1,877.71)	0.00	1,006,005.03	1,023,203.10	1,017,421.90	(5,781.20)
313378CR0	AGCY BULET	FHLB 2.250 03/11/22	1,545,486.45	0.00	0.00	(5,817.75)	0.00	1,539,668.70	1,554,297.60	1,549,679.70	(4,617.90)
Total for Reserve Fund			**17,471,162.96**	**1,006,377.95**	**(5,182,007.27)**	**(8,742.56)**	**0.00**	**13,286,791.08**	**17,520,136.22**	**13,324,992.20**	**(4,195,144.02)**

HilltopSecurities
Asset Management

Denton County Transportation Authority

Change in Value

From 03/31/2020 to 06/30/2020

CUSIP	Security Type	Security Description	03/31/20 Book Value	Cost of Purchases	Maturities / Calls / Sales	Amortization / Accretion	Realized Gain/(Loss)	06/30/20 Book Value	03/31/20 Market Value	06/30/20 Market Value	Change in Mkt Value
Sales Tax Fund											
TEXSTAR	LGIP	TexSTAR	9,173,048.40	7,271,391.24	0.00	0.00	0.00	16,444,439.64	9,173,048.40	16,444,439.64	7,271,391.24
Total for Sales Tax Fund			**9,173,048.40**	**7,271,391.24**	**0.00**	**0.00**	**0.00**	**16,444,439.64**	**9,173,048.40**	**16,444,439.64**	**7,271,391.24**
Total for Denton County Transportation Authority			**30,183,181.05**	**8,805,616.22**	**(5,412,009.97)**	**(8,742.56)**	**0.00**	**33,568,044.74**	**30,232,154.31**	**33,606,245.86**	**3,374,091.55**

HilltopSecurities
Asset Management

Denton County Transportation Authority

Earned Income

From 03/31/2020 to 06/30/2020

CUSIP	Security Type	Security Description	Beg. Accrued	Interest Earned	Interest Rec'd / Sold / Matured	Interest Purchased	Ending Accrued	Disc Accr / Prem Amort	Net Income
2011 Bond Fund									
WF-MANA	BANK DEP	Wells Fargo Managed Rate	0.00	357.40	357.40	0.00	0.00	0.00	357.40
Total for 2011 Bond Fund			**0.00**	**357.40**	**357.40**	**0.00**	**0.00**	**0.00**	**357.40**
Additional Reserve Fund									
TEXSTAR	LGIP	TexSTAR	0.00	445.93	445.93	0.00	0.00	0.00	445.93
Total for Additional Reserve Fund			**0.00**	**445.93**	**445.93**	**0.00**	**0.00**	**0.00**	**445.93**
Bond Fund									
TEXSTAR	LGIP	TexSTAR	0.00	1,216.83	1,216.83	0.00	0.00	0.00	1,216.83
Total for Bond Fund			**0.00**	**1,216.83**	**1,216.83**	**0.00**	**0.00**	**0.00**	**1,216.83**
Operating Fund									
Total for Operating Fund			**0.00**	**0.00**	**0.00**	**0.00**	**0.00**	**0.00**	**0.00**
Reserve Fund									
TEXSTAR	LGIP	TexSTAR	0.00	8,558.18	8,558.18	0.00	0.00	0.00	8,558.18
912828X96	TREAS NOTE	U.S. Treasury 1.500 05/15/20	5,686.81	1,813.19	7,500.00	0.00	0.00	343.65	2,156.84
3130AEWA4	AGCY BULET	FHLB 2.625 10/01/20	13,125.00	6,562.50	13,125.00	0.00	6,562.50	(1,996.51)	4,565.99
3130A7CV5	AGCY BULET	FHLB 1.375 02/18/21	2,463.54	5,156.25	0.00	0.00	7,619.79	605.76	5,762.01
9128284G2	TREAS NOTE	U.S. Treasury 2.375 04/15/21	10,966.53	5,905.05	11,875.00	0.00	4,996.58	(1,877.71)	4,027.34
313378CR0	AGCY BULET	FHLB 2.250 03/11/22	1,875.00	8,437.50	0.00	0.00	10,312.50	(5,817.75)	2,619.75
Total for Reserve Fund			**34,116.88**	**36,432.67**	**41,058.18**	**0.00**	**29,491.37**	**(8,742.56)**	**27,690.11**
Sales Tax Fund									
TEXSTAR	LGIP	TexSTAR	0.00	7,709.98	7,709.98	0.00	0.00	0.00	7,709.98
Total for Sales Tax Fund			**0.00**	**7,709.98**	**7,709.98**	**0.00**	**0.00**	**0.00**	**7,709.98**

Denton County Transportation Authority

Earned Income

From 03/31/2020 to 06/30/2020

CUSIP	Security Type	Security Description	Beg. Accrued	Interest Earned	Interest Rec'd / Sold / Matured	Interest Purchased	Ending Accrued	Disc Accr / Prem Amort	Net Income
Total for Denton County Transportation Authority			34,116.88	46,162.81	50,788.32	0.00	29,491.37	(8,742.56)	37,420.25

Denton County Transportation Authority

Investment Transactions

From 04/01/2020 to 06/30/2020

Trade Date	Settle Date	CUSIP	Security Type	Security Description	Coupon	Mty Date	Call Date	Par Value	Price	Principal Amount	Int Purchased / Received	Total Amount	Realized Gain / Loss	YTM	YTW
Reserve Fund															
Maturities															
05/15/20	05/15/20	912828X96	TREAS NOTE	U.S. Treasury	1.500	05/15/20		1,000,000.00	100.000	1,000,000.00	0.00	1,000,000.00		1.787	
Total for: Maturities								**1,000,000.00**		**1,000,000.00**	**0.00**	**1,000,000.00**		**1.787**	
Income Payments															
04/01/20	04/01/20	3130AEWA4	AGCY BULET	FHLB	2.625	10/01/20				0.00	13,125.00	13,125.00			
04/15/20	04/15/20	9128284G2	TREAS NOTE	U.S. Treasury	2.375	04/15/21				0.00	11,875.00	11,875.00			
05/15/20	05/15/20	912828X96	TREAS NOTE	U.S. Treasury	1.500	05/15/20				0.00	7,500.00	7,500.00			
Total for: Income Payments										**0.00**	**32,500.00**	**32,500.00**			

Denton County Transportation Authority

Investment Transactions

From 04/01/2020 to 06/30/2020

Trade Date	Settle Date	CUSIP	Security Type	Security Description	Coupon	Mty Date	Call Date	Par Value	Price	Principal Amount	Int Purchased / Received	Total Amount	Realized Gain / Loss	YTM	YTW

Total for All Portfolios

Transaction Type	Quantity	Total Amount	Realized G/L	YTM	YTW
Total Maturities	1,000,000.00	1,000,000.00		1.787	
Total Income Payments	0.00	32,500.00			

HilltopSecurities
Asset Management

Denton County Transportation Authority

Amortization and Accretion

From 03/31/2020 to 06/30/2020

CUSIP	Settle Date	Security Type	Security Description	Next Call Date	Purchase Qty	Orig Price	Original Cost	Amrt/Accr for Period	Total Amrt/Accr Since Purch	Remaining Disc / Prem	Book Value
Reserve Fund											
912828X96	10/03/19	TREAS NOTE	U.S. Treasury 1.500 05/15/20		0.00	99.824	0.00	343.65	0.00	0.00	0.00
3130AEWA4	09/12/19	AGCY BULET	FHLB 2.625 10/01/20		1,000,000.00	100.836	1,008,360.00	(1,996.51)	(6,363.50)	(1,996.50)	1,001,996.50
3130A7CV5	02/14/20	AGCY BULET	FHLB 1.375 02/18/21		1,500,000.00	99.836	1,497,540.00	605.76	922.85	1,537.15	1,498,462.85
9128284G2	01/17/20	TREAS NOTE	U.S. Treasury 2.375 04/15/21		1,000,000.00	100.941	1,009,414.06	(1,877.71)	(3,409.03)	(6,005.03)	1,006,005.03
313378CR0	03/13/20	AGCY BULET	FHLB 2.250 03/11/22		1,500,000.00	103.110	1,546,650.00	(5,817.75)	(6,981.30)	(39,668.70)	1,539,668.70
Total for Reserve Fund					**5,000,000.00**		**5,061,964.06**	**(8,742.56)**	**(15,830.98)**	**(46,133.08)**	**5,046,133.08**
Total for Denton County Transportation Authority					**5,000,000.00**		**5,061,964.06**	**(8,742.56)**	**(15,830.98)**	**(46,133.08)**	**5,046,133.08**

Denton County Transportation Authority

Projected Cash Flows

Cash Flows for next 180 days from 06/30/2020

CUSIP	Security Type	Security Description	Pay Date	Interest	Principal	Total Amount
Reserve Fund						
3130A7CV5	AGCY BULET	FHLB 1.375 02/18/21	08/18/20	10,312.50	0.00	10,312.50
313378CR0	AGCY BULET	FHLB 2.250 03/11/22	09/11/20	16,875.00	0.00	16,875.00
3130AEWA4	AGCY BULET	FHLB 2.625 10/01/20	10/01/20	13,125.00	1,000,000.00	1,013,125.00
9128284G2	TREAS NOTE	U.S. Treasury 2.375 04/15/21	10/15/20	11,875.00	0.00	11,875.00
Total for Reserve Fund				**52,187.50**	**1,000,000.00**	**1,052,187.50**

Denton County Transportation Authority

Projected Cash Flows

Cash Flows for next 180 days from 06/30/2020

CUSIP	Security Type	Security Description	Pay Date	Interest	Principal	Total Amount
Total for All Portfolios						
			August 2020	10,312.50	0.00	10,312.50
			September 2020	16,875.00	0.00	16,875.00
			October 2020	25,000.00	1,000,000.00	1,025,000.00
		Total Projected Cash Flows for Denton County Transportation Authorit		**52,187.50**	**1,000,000.00**	**1,052,187.50**

Board of Directors Memo

July 23, 2020

SUBJECT: Quarterly Grants Report Q3 FY20

Grant Activities This Period

DCTA currently has 9 open, fully executed grants that provide reimbursements for various capital projects, rail and bus preventive maintenance, operating assistance and ADA paratransit service. The grant funding sources include Federal Transit Administration (FTA), Federal Railroad Administration (FRA), and North Central Texas Council of Governments (NCTCOG). Total grant balance was $29.6 million as of 6/30/2020. Of this total, $1.4 million is obligated for Positive Train Control (PTC), $4 million is obligated for the FY16-18 Program of Projects, and $23.4 million is newly obligated for the Coronavirus Aid, Relief, and Economic Security (CARES) Act. On March 27, 2020, the President of the United States signed the CARES Act into law, providing more than $2 trillion for industries impacted by COVID-19. The transit industry received $25 billion to be apportioned and administered under the urbanized area (section 5307) and rural area (section 5311) formula programs. In addition to executing the CARES Act grant this quarter, DCTA also executed the FY18 Surface Transportation Program (STP) flex funds vanpool grant for $384,000. Although DCTA's hydrogen ecosystem project was not selected for FTA's FY20 Low or No Emission Grant Program, the project could still be selected for the FY20 Bus and Bus Facilities Program. Project selections are expected to be announced in the fall. DCTA was notified its planning project along the existing Kansas City Southern freight rail line was selected to receive $600,000 in funding from FTA's Pilot Program for Transit-Oriented Development (TOD) Planning. This funding will be included in future Funding Level data below once the grant application is fully executed.

GRANTS FUNDING LEVELS $29.6 MILLION AS OF 6/30/2020

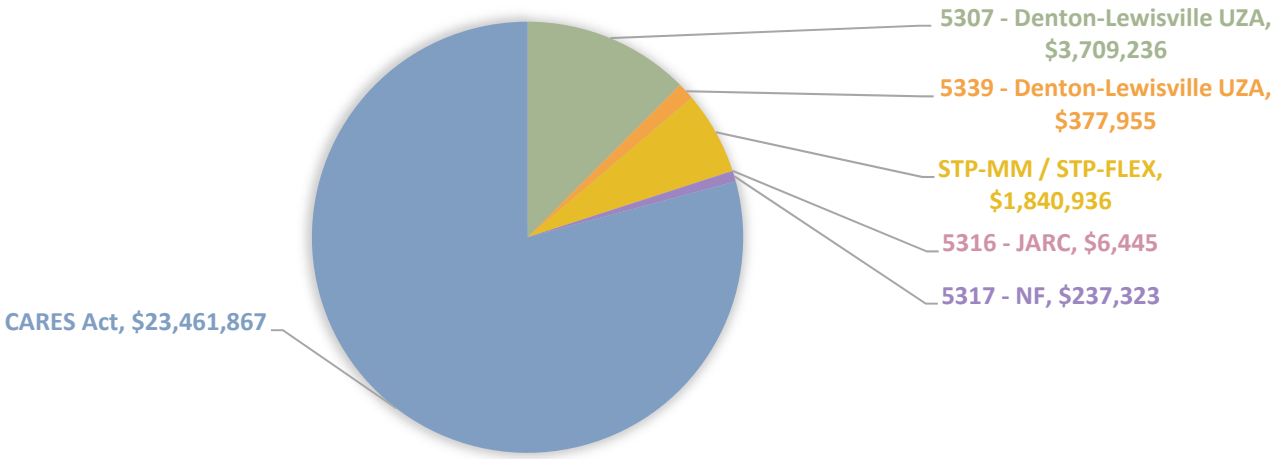

Program	Q2 FY20 Balance	Q3 FY20 Balance	Grant Activity
Denton-Lewisville UZA **(5307)**	$ 5,425,244	$ 3,709,236	Fleet Replacement, Preventive Maintenance, Safety & Security, ADA Paratransit
STP-MM / STP-FLEX	1,526,924	1,840,936	PTC Implementation & Vanpool
Job Access, Reverse Commute (JARC) **(5316)**	27,615	6,445	35W North Texas Xpress (NTX) Operating Assistance
New Freedom (NF) Funding **(5317)**	238,156	237,323	Train-the-Trainer
Bus and Bus Facilities **(5339)**	377,955	377,955	Fleet Replacement
CARES Act	-	23,461,867	Operating Assistance, Safety & Security
Total	**$ 7,595,894**	**$ 29,633,762**	

Pending Funding and Other Grant Activity

$1.6 million of the Congestion Mitigation & Air Quality (CMAQ) funding for bus purchases for 35W North Texas Xpress (NTX) services is in the process of being de-obligated from NCTCOG and re-obligated to DCTA through FTA. The grant for the purchase of the 35W North Texas Xpress buses will utilize Transportation Development Credits (TDCs) in lieu of the local cash match. Additionally, DCTA will receive $11.3 million in FY18 CMAQ funding from NCTCOG for land acquisition purchases and development. This grant will also utilize TDCs in lieu of the local cash match. Staff is currently working with FTA to execute the grant by the end of FY20.

DCTA was awarded $4 million for the PTC Enhancements proposal submitted in June 2018 to FRA's Consolidated Rail Infrastructure & Safety Improvements (CRISI) Grants Program. Staff obtained pre-award authority effective June 2019 and is working with FRA to execute the grant by the end of FY20.

In October 2019, the Regional Transportation Council (RTC) approved the addition of FY19 Program of Projects (POP) formula funding to the Transportation Improvement Program (TIP) in the amount of $9.1 million. In February 2020, FTA released its annual appropriations of FY20 POP formula funding in which DCTA was apportioned $8.8 million. Staff will discuss options for programming federal funds with the Board in August.

The table below provides information on all pending grants that have not yet been fully executed.

Program	Amount	Grant Activity	Funding Status
CMAQ	$ 1,610,000	Over the road coaches for 35W NTX service	Pending Re-obligation to DCTA
FY18 CMAQ	11,301,056	Land acquisition and construction	Pending FTA Review
FY17 5339 Formula	401,522	Bus radios, automated fare collection, support vehicles	Pending FTA Review
FY17 Bus & Bus Facilities	2,625,000	Light maintenance facility	Development; pending project planning by DCTA
FY18 CRISI	4,000,000	PTC enhancements	Pending FRA Review
FY18 5339 Formula	572,056	Fleet replacement	Development; pending project planning by DCTA
FY19 TOD	600,000	KCS line TOD planning	Development; pending project planning by DCTA
FY19 POP Formula	9,132,881	Preventive maintenance, operating assistance, ADA, fleet replacement, safety & security	Pending FTA Review
FY20 POP Formula	8,829,088	Not currently programmed	To be programmed by DCTA
TOTAL	**$ 39,071,603**		

Submitted by: Whitney Trayler

Whitney Trayler
Grants Manager

Final Review:

Marisa Perry, CPA
Chief Financial Officer/VP of Finance

Board of Directors Memo July 23, 2020

SUBJECT: Consider and Authorize the CEO to Execute an Assignment of Ground Lease with Riverside DPH, LP. Assigning Leasehold Interest to HC Hebron 121 Station 4, LLC

Background

In coordination with the City of Lewisville in 2016, DCTA entered into a Ground Lease Agreement with Riverside DPH, L.P. to lease a small portion of DCTA's land at the Hebron Station allowing the developer (Huffines) to construct and maintain parking and additional driveway access to the Hebron 121 Station multifamily development.

In exchange for the land lease arrangement, Riverside DPH, LP. agreed to construct and maintain additional active transportation components to improve bike and pedestrian connectivity between the development and the Hebron Station. The active transportation components included a sidewalk with lighting along the newly constructed driveway as well as an additional sidewalk with lighting connecting the northeastern quadrant of the development to the Hebron Station.

The portion of land required to complete the developer's request was initially purchased by DCTA using federal funds. To meet federal requirements for allowing the private sector to lease portions of the Agency's land, DCTA worked with Riverside DPH, LP. and the Federal Transit Administration (FTA) to complete the federal Joint Development process which demonstrated how DCTA would receive a greater value of return from the project than the value of the portion of land being leased by the developer. The Joint Development process was completed and approved by the FTA in 2016.

In May 2017, former DCTA President executed an amendment with Riverside DPH, LP. allowing the developer to add irrigation to their plan.

Identified Need

With the completion of Phase 4 of the development's construction, Riverside DPH, LP. no longer owns the property. HC Hebron 121 Station 4, LLC is now the property owner and the land lease needs to be reassigned to the new legal property owner.

Financial Impact

There is no financial impact to DCTA.

Recommendation

DCTA staff recommends approval granting the CEO authorization to execute the ground lease agreement assignment to HC Hebron 121 Station 4, LLC.

Exhibits

Exhibit 1: Assignment of Ground Lease
Exhibit 2: 2016 Board Memo Regarding Huffines Development Agreement
Exhibit 3: Ground Lease Agreement 2016
Exhibit 4: Ground Lease Amendment 2017
Exhibit 5: 2016 FTA Approval Letter: Huffines Joint Development Project
Exhibit 6: Hebron 121 Station Technical SOW: Huffines Joint Development Project

Submitted By: _____
Kristina Holcomb, Deputy CEO

ASSIGNMENT OF GROUND LEASE

This Assignment of Ground Lease (this "***Assignment***") is made and entered into this _____ day of _____, 2020, by and between RIVERSIDE DPH, L.P., a Texas limited partnership ("***Assignor***"), and HC HEBRON 121 STATION 4, LLC, a Texas limited liability company ("***Assignee***").

A. Reference is hereby made to that certain Ground Lease Agreement dated August 18, 2016, between Denton County Transportation Authority, a Texas coordinated county transportation authority ("***DCTA***"), as lessor, and Assignor, as lessee, as amended by First Amendment to Ground Lease Agreement dated effective May 4, 2017 (collectively, the "***Ground Lease***"), under which Assignor, as lessee, leases from DCTA and DCTA, as lessor, leases to Assignor, certain premises located in Denton County, Texas, as more particularly described on **Exhibit A** and depicted on **Exhibit B** attached hereto (the "***Leased Premises***").

B. By Special Warranty Deed recorded as Document No. 2016-17492 in the Official Records of Denton County, Texas, Assignor sold and conveyed to Assignee certain real property described as Lot 4, Block B, Lots 2 and 3, Block C and Lot 2, Block E of HEBRON 121 STATION ADDITION PHASE 4 in Denton County, Texas, that benefits by the Improvements (as defined in the Ground Lease) on the Leased Premises.

C. Assignor desires to transfer and assign to Assignee, all of Assignor's right, title and interest, as lessor under the Ground Lease, and Assignee desires to take assignment of the Ground Lease and assume all of Assignors' right, title and interests in and to the Ground Lease and to assume all obligations of Assignor thereunder.

NOW, THERFORE, for good and valuable consideration, the receipt and sufficiency of which are hereby acknowledged, Assignor hereby transfers and assigns to Assignee all of Assignor's right, title and interest in and to Ground Lease including all of Assignor's obligations and liabilities thereunder, and Assignee hereby accepts the assignment of Assignor's right, title and interest in and to the Ground Lease and assumes all of Assignor's obligations and liabilities thereunder.

Pursuant to Section 8.01 of the Ground Lease, DCTA joins in execution of this Assignment to evidence its consent to Assignor's sale of the Leased Premises to Assignee, and to Assignor's assignment of the Ground Lease to Assignee and Assignee's acceptance and assumption of all obligations and liabilities thereunder.

[SIGNATURES APPEAR ON THE FOLLOWING PAGE]

This Assignment is executed as of the date first set forth above.

ASSIGNOR:

RIVERSIDE DPH, L.P.,
a Texas limited partnership

By: Riverside DPH GP, LLC,
its general partner

By:_____
Name:_____
Title:_____

ASSIGNEE:

HC HEBRON 121 STATION 4, LLC,
a Texas limited liability company

By:_____
Name:_____
Title:_____

Denton County Transportation Authority, a Texas coordinated county transportation authority joins in execution of this Assignment solely for the purpose of evidencing its consent to the assignment made by this Assignment:

DENTON COUNTY TRANSPORTATION AUTHORITY,
a Texas coordinated county transportation authority

By:_____
Name:_____
Title:_____

EXHIBIT A

EXHIBIT "A"
PREMISES
0.026 ACRES - (1152 SQUARE FEET)
TRACT OF LAND IN THE JUAN ARMENDARIS SURVEY,
ABSTRACT NO 28 CITY OF LEWISVILLE
DENTON COUNTY, TEXAS.

Being a 0 026 acre tract of land situated in the Juan Armendaris Survey Abstract No. 28, Denton County Texas and being a portion of Lot 1, Block A, as recorded in County Clerk Document Number 2009 167 Plat Records, Denton County Texas, and being more particularly described as follows

BEGINNING at the northeast corner of Lot 2, Block E, Hebron 121 Station Addition, Phase 4, as recorded in Document Number 2016-51, Plat Records Denton County, Texas also being in the south line of said Lot 1,

THENCE, South 89°42'33" East, along the north line of said Lot 2 and the south line of said Lot 1, a distance of 144.76 feet to a point for the beg nning of a non-tangent curve to the right having a radius of 226.62 feet and a central angle of 37°15'12" and a long chord which bears North 89°42'33" East, 144.76 feet;

THENCE, departing the south line of said Lot 1 and the north line of said Lot 2, along said non-tangent curve to the right an arc distance of 147 35 feet to the POINT OF BEGINNING and CONTAINING 1152 square feet, 0.026 acres of land, more or less.

P4.01

EXHIBIT A
BEING A 0.05 ACRE (2,193 SQ.FT.) DRIVEWAY ACCESS
DOCUMENT No. 2009-167, PLAT RECORDS, DENTON COUNTY, TEXAS
SITUATED IN THE A.J. HITCHCOCK SURVEY, ABSTRACT No. 614
CITY OF LEWISVILLE, DENTON COUNTY, TEXAS

BEING a 0.05 acre tract of land out of the A.J. Hitchcock Survey, Abstract No.614, City of Lewisville, Denton County, Texas and being a portion of Lot 1, Block A, DCTA Hebron Station Addition, as recorded in Document No. 2009-167, Plat Records, Denton County, Texas, and being more particularly described as follows:

COMMENCING at a found 1/2 inch iron rod with "GRAHAM ASSOC INC." (GAI) cap, being in the north line of Lot 4, Block B, Hebron 121 Station Addition, as recorded in Document No. 2016-51, Plat Records, Denton County, Texas, and the south line of said Lot 1, being a common line;

THENCE South 89°42'33" East, along said common line, a distance of 27.94 feet to the **POINT OF BEGINNING** for the beginning of a non-tangent curve to the left having a radius of 18.50 feet, a central angle of 49°03'54", and a long chord that bears North 14°07'07" West, 15.36 feet;

THENCE along said non-tangent curve to the left, an arc length of 15.84 feet to a point;

THENCE North 38°39'04" West, a distance of 31.43 feet to a point for the beginning of a tangent curve to the left having a radius of 23.50 feet, a central angle of 20°10'07", and a long chord that bears North 48°44'07" West, 8.23 feet;

THENCE along said tangent curve to the left, an arc length of 8.27 feet to a point, being in the north line of said Lot 1 and the south right-of-way line of Lakeside Circle (Variable Width Right-of-Way), being a common line, for the beginning of a non-tangent curve to the left having a radius of 262.00 feet, a central angle of 04°58'37", and a long chord that bears North 62°47'57" East, 22.75 feet;

THENCE along said common line and said non-tangent curve to the left, an arc length of 22.76 feet to a point for the beginning of a compound curve to the left having a radius of 347.93 feet, a central angle of 02°52'05", and a long chord that bears North 58°52'35" East, 17.42 feet;

THENCE along said common line and said compound curve to the left, an arc length of 17.42 feet to a point for the beginning of a non-tangent curve to the left having a radius of 23.50 feet, a central angle of 49°07'48", and a long chord that bears South 14°05'10" East, 19.54 feet;

THENCE along said non-tangent curve to the left and leaving said common line, an arc length of 20.15 feet to a point;

THENCE South 38°39'04" East, a distance of 21.64 feet to a point for the beginning of a tangent curve to the left having a radius of 134.50 feet, a central angle of 18°16'21", and a long chord that bears South 47°47'14" East, 42.71 feet;

Exhibit B

(Depiction)

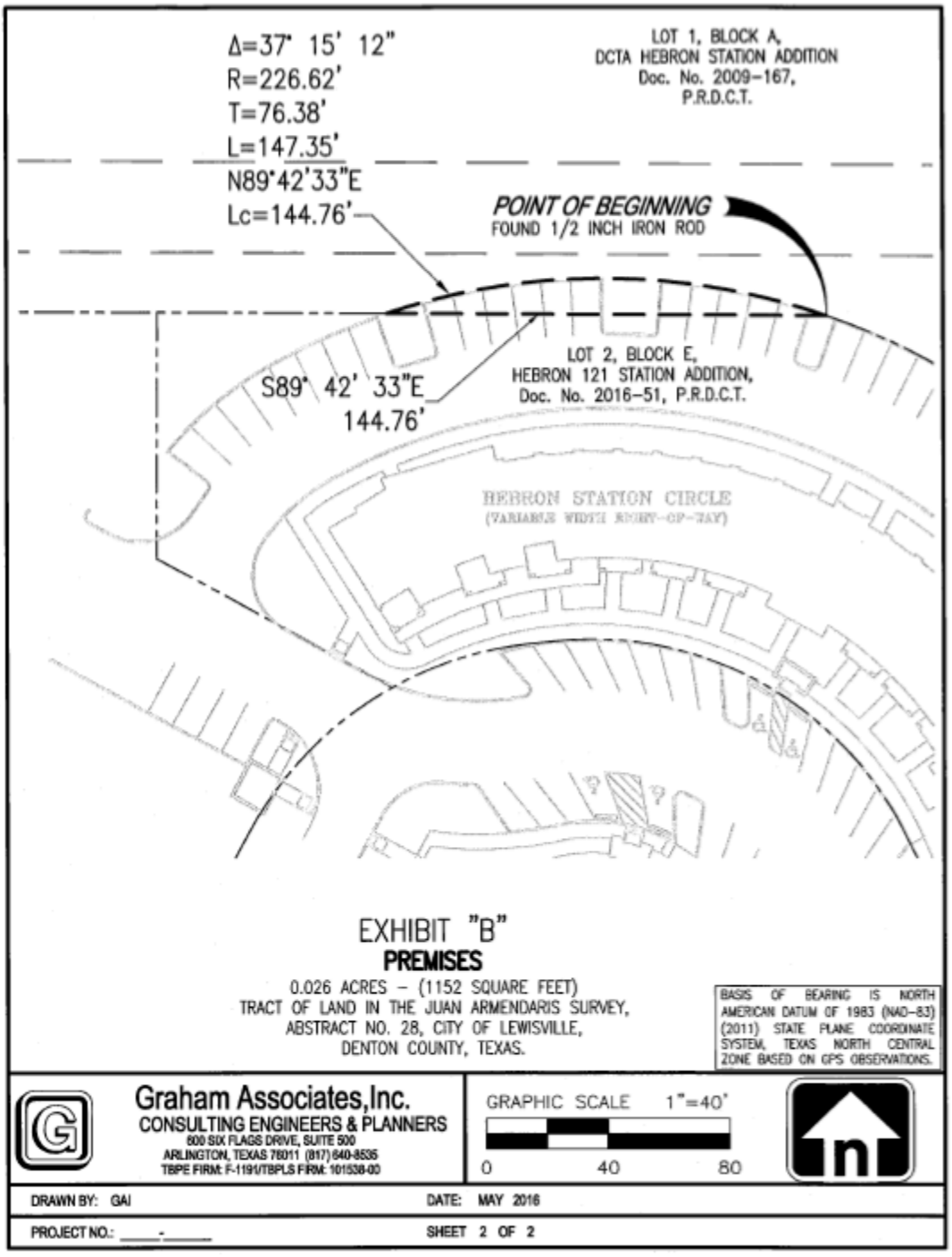

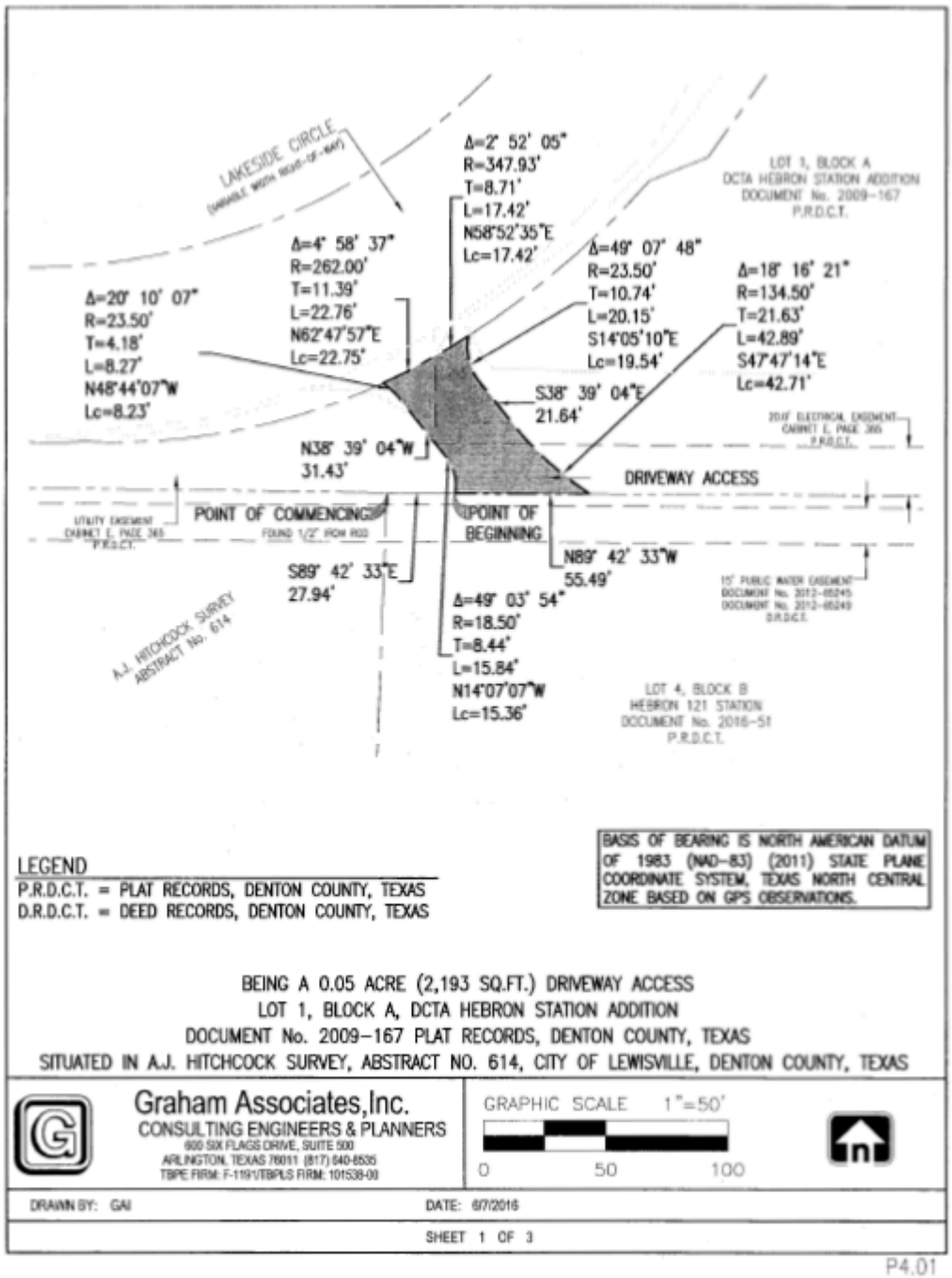
LAKESIDE CIRCLE
Δ=2° 52' 05"
R=347.93'
T=8.71'
L=17.42'
N58°52'35"E
Lc=17.42'
LOT 1, BLOCK A
DCTA HEBRON STATION ADDITION
DOCUMENT No. 2009-167
P.R.D.C.T.
Δ=4° 58' 37"
R=262.00'
T=11.39'
L=22.76'
N62°47'57"E
Lc=22.75'
Δ=49° 07' 48"
R=23.50'
T=10.74'
L=20.15'
S14°05'10"E
Lc=19.54'
Δ=18° 16' 21"
R=134.50'
T=21.63'
L=42.89'
S47°47'14"E
Lc=42.71'
Δ=20° 10' 07"
R=23.50'
T=4.18'
L=8.27'
N48°44'07"W
Lc=8.23'
S38° 39' 04"E
21.64'
N38° 39' 04"W
31.43'
DRIVEWAY ACCESS
POINT OF COMMENCING
POINT OF BEGINNING
N89° 42' 33"W
55.49'
S89° 42' 33"E
27.94'
Δ=49° 03' 54"
R=18.50'
T=8.44'
L=15.84'
N14°07'07"W
Lc=15.36'
A.J. HITCHCOCK SURVEY
ABSTRACT No. 614
LOT 4, BLOCK B
HEBRON 121 STATION
DOCUMENT No. 2016-51
P.R.D.C.T.
LEGEND
P.R.D.C.T. = PLAT RECORDS, DENTON COUNTY, TEXAS
D.R.D.C.T. = DEED RECORDS, DENTON COUNTY, TEXAS
BASIS OF BEARING IS NORTH AMERICAN DATUM OF 1983 (NAD-83) (2011) STATE PLANE COORDINATE SYSTEM, TEXAS NORTH CENTRAL ZONE BASED ON GPS OBSERVATIONS.
BEING A 0.05 ACRE (2,193 SQ.FT.) DRIVEWAY ACCESS
LOT 1, BLOCK A, DCTA HEBRON STATION ADDITION
DOCUMENT No. 2009-167 PLAT RECORDS, DENTON COUNTY, TEXAS
SITUATED IN A.J. HITCHCOCK SURVEY, ABSTRACT NO. 614, CITY OF LEWISVILLE, DENTON COUNTY, TEXAS
Graham Associates, Inc.
CONSULTING ENGINEERS & PLANNERS
600 SIX FLAGS DRIVE, SUITE 500
ARLINGTON, TEXAS 76011 (817) 640-8535
TBPE FIRM: F-119 \ TBPLS FIRM: 101538-00
GRAPHIC SCALE 1"=50'
0 50 100
DRAWN BY: GAI
DATE: 6/7/2016
SHEET 1 OF 3
P4.01

Exhibit B

DCTA

Board of Directors Memo **March 24, 2016**

Item: 2(e) Authorize President to Enter Into a Purchase, Lease or License Agreement with Huffines Developers

Background
With the construction of Huffines Developers' multi-phased multi-family housing development, the density around the Hebron Station has been increasing immensely, providing greater ridership potential for A-train and Connect bus service.

Over the past several months, staff has been coordinating with the City of Lewisville and Huffines Developers to identify potential opportunities providing a connection between the Hebron 121 Station multi-family development and the Hebron Station via driveway access as well as with a bike and pedestrian trail for pedestrian access.

Identified Need
An agreement allowing Huffines Developers to finalize site plans, access to DCTA property and authorization to construct a driveway and pedestrian walkway per DCTA's specifications including lighting and ADA policy compliance as well as allowing Huffines Developers minimal encroachment on DCTA property for the completion of their mixed-use phase of development for additional parking spaces utilizing DCTA's undeveloped property.

A draft site plan is attached.

Financial Impact
There is no financial impact to DCTA. This is an equitable exchange of value for both parties.

Driveway - The area of DCTA's undeveloped land selected for the driveway construction has been noted as identified as undevelopable land and will not hinder future DCTA development.

Pedestrian Pathway - The pedestrian pathway location will not negatively impact DCTA's future land development opportunities.

Utility Corridor - Allowing Huffines to encroach on DCTA's property for the mixed-use phase additional parking spaces will not cause any negative impact to future land development opportunities. This small section of land would not be available for future DCTA development opportunities as it has been identified as a utility corridor.

Recommendation
DCTA staff recommends approval granting the President authorization to enter into an agreement with Huffines Developers.

Submitted by:

Kristina Brevard, Vice President
Planning & Development

Final Review:

James C. Cline, Jr., P.E.
President

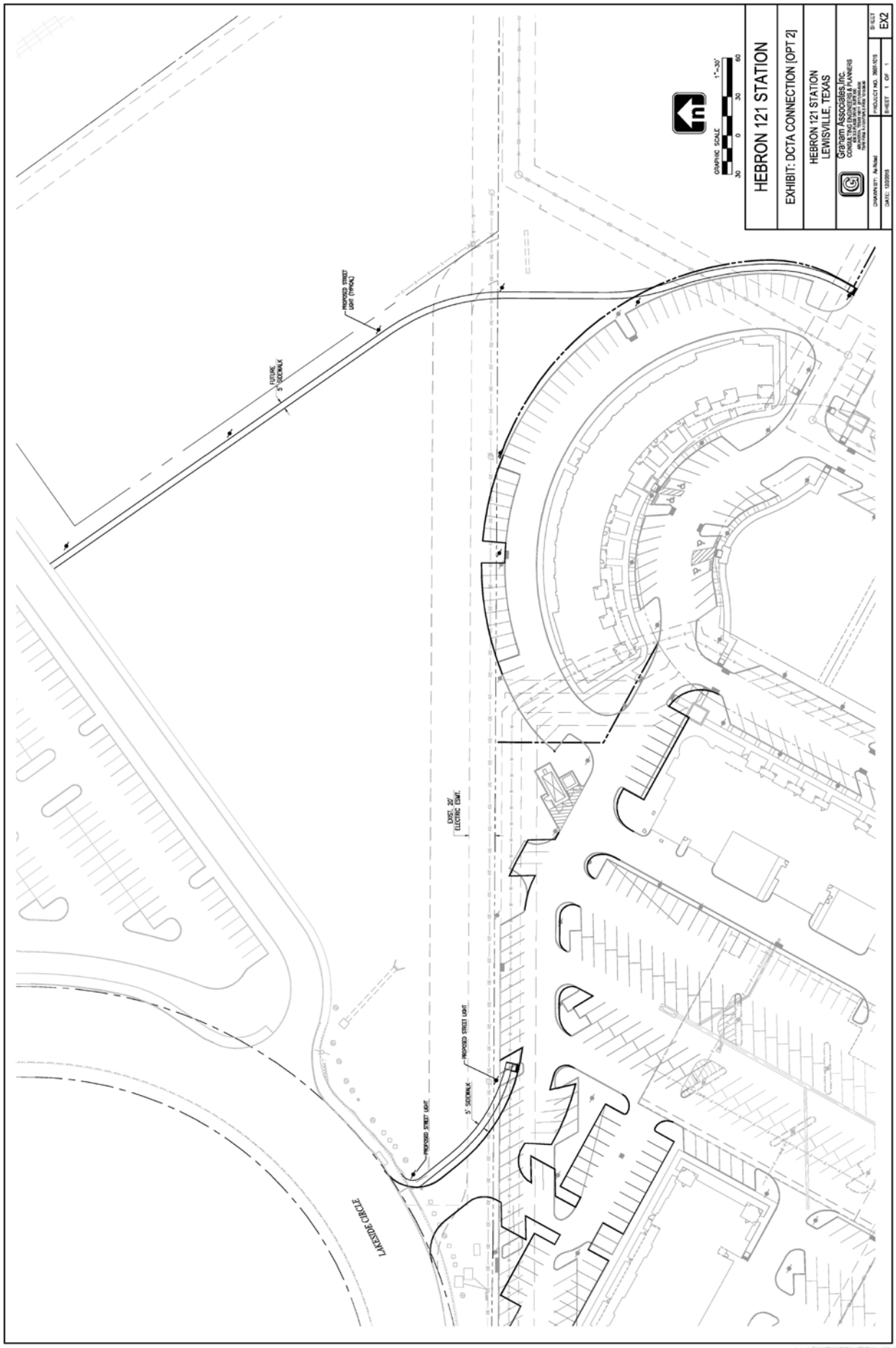
HEBRON 121 STATION
EXHIBIT: DCTA CONNECTION [OPT 2]
HEBRON 121 STATION
LEWISVILLE, TEXAS
Graham Associates, Inc.
GRAPHIC SCALE
1"=30'
PROPOSED STREET LIGHT (TYPICAL)
FUTURE 5' SIDEWALK
EXIST. 20' ELECTRIC ESMT.
PROPOSED STREET LIGHT
5' SIDEWALK
PROPOSED STREET LIGHT
LAKESIDE CIRCLE
SHEET EX2

STATE OF TEXAS §
§
§
COUNTY OF DENTON §

Ground Lease Agreement between Riverside DPH and Denton County Transportation Authority

This **GROUND LEASE AGREEMENT** ("Agreement") is made and entered into as of the Effective Date by and between **Denton County Transportation Authority, a Texas coordinated county transportation authority** ("Lessor"), and **Riverside DPH, L.P., a Texas limited partnership** ("Lessee"), (each a "Party" and collectively the "Parties") acting by and through their authorized representatives.

WHEREAS, Lessee, pursuant to a temporary construction access easement, has agreed to make improvements, including a concrete trail and lighting ("Improvements"), on Lessor's property, which is adjacent to the property owned by Lessee, for the benefit of providing access to Lessor's transit facilities; and

WHEREAS, in consideration for the Lessee's construction of Improvements on Lessor's property, Lessor agrees to lease a portion of Lessor's Premises (herein defined) to Lessee for the purpose of Lessee constructing and maintaining fourteen (14) parking stalls and an access driveway (the "Improvements") for the benefit of Lessee;

NOW THEREFORE, for and in consideration of the recitals set forth above and other good and valuable consideration, the receipt and sufficiency of which is hereby acknowledged by the Parties, Lessor and Lessee agree as follows:

Article I
Demise of Leased Premises

Lessor, for and in consideration of the rents, covenants and promises herein contained to be kept, performed, and observed by Lessee, does hereby lease and demise to Lessee, subject to the provisions of this Agreement, and Lessee does hereby rent and accept from Lessor, the real property, described and depicted in **Exhibits "A" and "B",** attached hereto and incorporated herein ("the Leased Premises"), TO HAVE AND TO HOLD the Leased Premises, together with all rights, privileges, easements, and appurtenances, belonging to or in any way appertaining to the Leased Premises during the Lease Term.

Article II
Lease Term

2.01 Initial Lease Term. This Agreement shall be for a term commencing on the last date of execution hereof (the "Effective Date"), and ending on December 31, 2026 ("the Initial Term"); subject, however, to earlier termination as hereinafter provided.

2.02 Extension Terms. After the Initial Term, this Agreement shall automatically be extended for additional periods of ten (10) years ("the Extension Terms") unless either Party

provides written notice to the other Party not earlier than two (2) years or later than one (1) year prior to the last day of the Initial Term or any of the Extension Terms, as applicable, that this Agreement will terminate at the end of the then current Initial Term or Extension Term. The Initial Term and Extension Terms shall collectively be referred to herein as "the Lease Term."

2.03 Termination without Cause. Lessor reserves the right to terminate this Agreement without cause at any time during the Initial Term or Extension Terms, by giving Lessee six (6) months prior written notice of Lessor's intent to terminate this Agreement.

2.04 Holding Over. This Agreement shall terminate and become null and void without further notice on the expiration of the Lease Term, and any holding over by Lessee after the expiration of the Lease Term shall not constitute a renewal hereof or give Lessee any rights hereunder in or to the Leased Premises.

Article III
Rent

3.01 Rent. Lessee agrees to pay to Lessor as rent for the use and occupancy of the Leased Premises, pursuant to this Agreement, the sum of ONE ($1.00) DOLLAR per year, payable in advance, on the first business day of each year during the Lease Term. Lessee may, at its sole option, pay rent for the entire Initial Term or any of the Extension Terms in full in advance.

3.02 Location of Payment. All installments of rent hereunder, when and as the same become due and payable, shall be paid in lawful money of the United States at the time to Lessor to the attention of accounts payable at the address set forth in Section 11.04.

Article IV
Limited Use of Leased Premises

4.01 Permitted Use. Lessee's use of the Leased Premises is expressly limited to the construction and maintenance of that portion of the 14 parking stalls and the access driveway as shown and depicted on Exhibits "A" and "B" attached hereto and incorporated herein ("the Permitted Use").

4.02 Location of Lessor Facilities on Leased Premises. Lessor shall have the right to locate, or grant others the right to locate, utility and/or telecommunication equipment or facilities on the Leased Premises during the term of this Agreement that serve Lessor and/or Lessor's adjacent property with the prior written consent of the Lessee, such consent not to be unreasonably withheld, denied or delayed, and subject to the following:

(a) Lessee shall be required to remove any existing improvements or structures in order to accommodate the location of such utility and/or telecommunication equipment or facilities at Lessee's sole expense; and

(b) Such utility and/or telecommunication equipment and facilities shall be located in such a manner as to not unreasonably interfere with Lessee's use of the Leased Premises.

Article V
Construction by Lessee

5.01 Construction Permitted. Subject to the Permitted Use, Lessee shall have the right at any time and from time to time during the Lease Term, at Lessee's sole cost, to erect, maintain, alter, remodel, reconstruct, rebuild, replace, and remove the Improvements on the Leased Premises, subject to the following general conditions:

(a) Performance of Work – Generally. Lessee and/or its contractor shall use reasonable care to avoid damaging any existing buildings, equipment and vegetation on or about any property adjacent to the Leased Premises owned by or under the control of Lessor. If the failure to use reasonable care by Lessee and/or its contractor results in damage to such adjacent property, Lessee and/or its contractor shall repair the damage at no cost or expense to Lessor. If Lessee or its contractor fails or refuses to make such replacement, Lessor shall have the right, but not the obligation, to make or effect any such repair or replacement at the sole cost and expense of Lessee, which cost and expense Lessee agrees to pay to Lessor upon demand. Lessee shall require that the work and activities associated with the Permitted Use shall be conducted in such a manner and at such times to not endanger or unreasonably interfere with Lessor's operations.

(b) Responsibilities of Parties; Contractor Indemnification.

(1) Lessor and Lessee acknowledge that no Party to this Agreement is an agent, servant, or employee of the other Party, and each Party agrees it is responsible for its own individual negligent acts or omissions or other tortious conduct as well as such acts and deeds of its contractors, agents, representatives, and employees during performance of this Agreement without waiving any governmental immunity available to the Parties under Texas and other applicable laws, and without waiving any available defenses under Texas and other applicable laws. Nothing in this Section 5.01 shall be construed to create or grant any rights, contractual or otherwise, in or to any third persons or entities.

(2) **NOTWITHSTANDING ANYTHING TO THE CONTRARY IN SECTION 5.01(b)(1), ABOVE, PRIOR TO ANY CONTRACTOR ENGAGED BY LESSEE ENTERING ONTO THE LEASED PREMISES PURSUANT TO THIS AGREEMENT TO CONSTRUCT, REPAIR, REPLACE, OR REMOVE ANY IMPROVEMENTS OR ANY PART THEREOF, LESSEE SHALL REQUIRE THE CONTRACTOR TO AGREE TO INDEMNIFY,**

DEFEND, AND HOLD HARMLESS LESSOR AND ITS OFFICERS, AGENTS, AND EMPLOYEES ("LESSOR ") AGAINST AND FROM:

(i) **ANY AND ALL LOSS, COST, DAMAGE, OR EXPENSE, INCLUDING REASONABLE ATTORNEY'S FEES, ARISING OUT OF OR FROM ANY ACCIDENT OR OTHER OCCURRENCE CAUSING PERSONAL INJURY, DEATH OR PROPERTY DAMAGE RESULTING FROM OR RELATED TO USE OF THE LEASED PREMISED BY THE CONTRACTOR, ITS AGENTS, EMPLOYEES, PARTNERS, SHAREHOLDERS, AGENTS, SUBCONTRACTORS, INVITEES, OR GUESTS, WHETHER OCCASIONED BY THE INTENTIONAL OR NEGLIGENT ACTS OR OMISSIONS OF THE CONTRACTOR, ITS EMPLOYEES, OFFICERS, PARTNERS, SHAREHOLDERS, AGENTS, SUBCONTRACTORS, INVITEES, OR GUESTS. EXCEPT WHEN CAUSED BY THE WILLFUL MISCONDUCT OR GROSS NEGLIGENCE OF THE LESSOR AND ONLY THEN TO THE EXTENT OF THE PROPORTION OF ANY FAULT DETERMINED AGAINST ANY OF THE LESSOR'S PARTIES AS THE RESULT OF LESSOR'S WILLFUL MISCONDUCT OR GROSS NEGLIGENCE; AND**

(ii) **ANY PENALTY, OR ANY DAMAGE, OR CHARGE, IMPOSED FOR ANY VIOLATION OF ANY LAW, ORDINANCE, RULE OR REGULATION ARISING OUT OF THE USE OF THE LEASED PREMISES BY THE CONTRACTOR, ITS AGENTS, EMPLOYEES, PARTNERS, SHAREHOLDERS, AGENTS, SUBCONTRACTORS, INVITEES, OR GUESTS.**

(c) Insurance. Prior to entering onto the Leased Premises under this Agreement for the purpose of performing any work related to the Permitted Use, Lessee shall require all contractors and subcontractors engaged by Lessee to perform work on the Leased Premises to comply with the provisions of this Section 5.01(c) by procuring and maintaining the following types and amounts of insurance with companies admitted to do business in the State of Texas and having an A.M. Best Rating of A- VII or better and in form reasonably satisfactory to Lessor, which insurance shall be primary and non-contributory.

(1) Commercial General Liability Insurance with limits of not less than:

(i)	Each Occurrence Limit	$1,000,000
(ii)	Damage to Rented Premises	100,000

(iii)	Medical Expenses (any one person)	10,000
(iv)	Personal & Advertising Injury	1,000,000
(v)	General Aggregate	2,000,000
(vi)	Products - Completed Operations Aggregate	2,000,000

Policy shall include independent contractor's liability covering, but not limited to, the liability assumed under the indemnification provision of this Agreement, fully insuring contractor's (or subcontractor's) liability for bodily injury (including death) and property damage. Lessor and their respective employees, officers, and agents (collectively, "Lessor") named as additional insureds without any qualification or restriction along with a waiver of subrogation and other rights in favor of Lessor. Lessor must be provided not less than 30 days' notice of cancellation or modification of the policy or any coverage amounts.

(2) Commercial Automobile Liability Policy:

(i) Covering all owned, non-owned or hired automobiles, with coverage not less than $1,000,000 Combined Single Limit Bodily Injury and Property Damage.

(ii) Lessor named as additional insureds without any qualification or restriction along with a waiver of subrogation and other rights in favor of the Lessor.

(iii) Lessor must be provided not less than 30 days' notice of cancellation or modification.

(3) Workers' Compensation Insurance:

(i) Providing Statutory Benefits under the Workers' Compensation Act of the State of Texas and/or any other State or Federal Law or Laws applicable to the Contractor's employees performing the work under this Agreement.

(ii) Employer's Liability Insurance with limits of liability of not less than $1,000,000 each accident, $1,000,000 each employee for disease and $1,000,000 policy limit for disease.

(iii) Policies must include (a) Other States Endorsement to include TEXAS if business is domiciled outside the State of Texas, and (b) a waiver of all rights of subrogation and other rights in favor of Lessor.

(4) Lessee shall require all contractors and subcontractors engaged by Lessee to perform work on the Leased Premise to furnish Lessor Certificates of Insurance and copies of Endorsements for Additional Insured, Waiver of Subrogation and Contractual Liability (or, as and when Lessor may direct, copies of the actual insurance policies) as evidence of the coverage's outlined in Paragraphs (1), (2), and (3), above, and this Paragraph (4). Approval will be expedited if all required coverage's and the following endorsements are included on the Certificates:

(i) Endorsement showing DCTA named as additional insureds as required by Paragraphs (1) and (2), above and requiring that Lessor be given 30 days' notice of cancellation or modification. The certificate must specify that the endorsement is applicable to the General Liability and Auto Liability Policies;

(ii) Contractual liability endorsement;

(iii) Endorsement removing exclusions for XCU hazards; and

(iv) Waiver of subrogation endorsement specific to Workers Compensation.

(5) If (i) Lessee's contractors and subcontractors do not procure, maintain and provide proof of compliance with this Section 5.01(c), or (ii) if Lessee is performing the work using Lessee's employees, Lessee shall be required to comply with the provisions of this Section 5.01(c).

(d) Compliance with Laws. Lessee agrees to abide by and be governed by all laws, ordinances and regulations of any and all governmental entities having jurisdiction over Lessee.

(e) Mechanic's Liens Not Permitted. Lessee shall fully pay all labor and materials used by Lessee in, on or about the Leased Premises and will not permit or suffer any mechanic's or materialman's liens of any nature be affixed against the Leased Premises by reason of any work done or materials furnished to the Leased Premises at the instance or request of Lessee. If any such mechanics' liens or materialmen's liens shall be recorded against the Leased Premises, or any improvements thereon, Lessee shall cause the same to be removed or, in the alternative, if Lessee in good faith desires to contest the same, Lessee shall be privileged to do so, but in such case Lessee hereby agrees, to the extent allowed by law, to indemnify and save Lessor harmless from all liability for damages occasioned thereby and shall, in the event of a judgment of foreclosure on said mechanics' lien, cause the same to be discharged and removed prior to the execution of such judgment.

5.02 Grant of Easements. In order to provide for the more orderly development of the Leased Premises by Lessee for the Permitted Use, it may be necessary, desirable, or required that street, water, sewer, drainage, gas, power lines and other easements, and dedications, and similar rights be granted or dedicated over or within portions of the Leased Premises. Provided that, in Lessor's reasonable judgment, the request is reasonable and not unduly burdensome to the Leased Premises or Lessor's current or future use of Lessor's adjacent property, Lessor shall, upon request of Lessee, join with Lessee in executing and delivering such documents, from time to time, and throughout the Lease Term, as Lessor deems appropriate, reasonable, and as may be required by other governmental agencies, public utilities, and companies for the purpose of granting such easements and dedications, which actions shall not be unreasonably withheld, delayed, or denied.

5.03 Disposition of Improvements on Termination. Any and all improvements, of whatsoever nature at any time constructed, placed, or maintained on any part of the Leased Premises shall be and remain the property of Lessee. Lessee shall have the right at any time during Lessee's occupancy of the Leased Premises to remove any and all improvements, owned or placed by Lessee, in, under, or on the Leased Premises, during the Lease Term. Lessee, at Lessee's sole expense, shall remove all of Lessee's improvements not later than one hundred eighty (180) days following the request of the Lessor at the expiration or cancellation of this Agreement and, where structures have been removed, bring the surface where the removal occurred level with the adjacent grade and top with a ground cover of the same variety adjacent to such restored area. However, if Lessor does not request removal of the improvements, and such improvements are not removed voluntarily by Lessee within one hundred eighty (180) days after the expiration or cancellation of this Agreement, such improvements shall become the property of Lessor.

5.04 Hazardous Material Clean-Up. Lessee further agrees not to use the Leased Premises so as to cause, suffer, or allow any contamination of soil, ground water, surface water or natural resources on or adjacent to the Leased Premises resulting from any spills or leaks of oil, gasoline, hazardous materials or other chemical compounds.

5.05 Repair and Maintenance of Improvements. Lessee, at Lessee's own cost and expense at all times during the Lease Term agrees to keep and maintain, or cause to be kept and maintained, all improvements which may be erected by Lessee on the Leased Premises in a good state of appearance and repair, reasonable wear and tear excepted.

Article VI
Insurance

6.1 Insurance. Prior to occupancy of the Leased Premises, Lessee agrees to procure and maintain at its sole cost and expense the following types and amounts of insurance with an insurer or insurers and in form satisfactory to Lessor, which insurance shall be primary and non-contributory.

(a) Commercial General Liability with Contractual Liability Endorsement with a combined single limit of not less than $2,000,000 per occurrence.

(b) Commercial Automobile Liability Policy covering all owned and rented vehicles with a combined single limit of not less than $2,000,000 per occurrence.

(c) All policies shall be endorsed to provide for a Waiver of Subrogation Endorsement, waiving the carrier's right of recovery under subrogation or otherwise from DCTA.

(d) The Commercial General Liability and Commercial Automobile Liability policies shall be endorsed to name DCTA, its directors, officers, and employees as additional insureds.

(e) All policies shall be endorsed to require that DCTA be given 30 days' notice of cancellation or decrease of coverage limits.

(f) Lessee agrees to cause DCTA to be provided Certificates of Insurance and copies of Endorsements for Additional Insured, Waiver of Subrogation and Contractual Liability (or, as and when DCTA may direct, copies of the actual insurance policies) as evidence of the coverage's outlined in this Section 6.1(f).

(g) Unless Lessee's insurance covers the operations of Lessee's general contractor, Lessee shall require the general contractor engaged by Lessee to perform work within or using the Leased Premises pursuant to this Agreement to comply with the provisions of this Section 6.1(g) in the same manner as Permittee and, in addition, to carry Workers' Compensation Insurance providing Statutory Benefits under the Workers' Compensation Act of the State of Texas and/or any other State or Federal Law or Laws applicable to employees performing the work within the Temporary Easement Area.

Article VII
Indemnification

LESSEE SHALL INDEMNIFY, DEFEND (INCLUDING THE PAYMENT OF ALL REASONABLE ATTORNEYS' FEES AND EXPENSES), AND HOLD HARMLESS LESSOR AND ITS OFFICERS, AGENTS, AND EMPLOYEES AGAINST AND FROM ANY AND ALL LOSS, COST, DAMAGE, OR EXPENSE, INCLUDING REASONABLE ATTORNEY'S FEES, ARISING OUT OF OR FROM ANY ACCIDENT OR OTHER OCCURRENCE CAUSING PERSONAL INJURY, DEATH OR PROPERTY DAMAGE RESULTING FROM OR RELATED TO USE OF THE LEASED PREMISES BY LESSEE, ITS AGENTS, EMPLOYEES, PARTNERS, SHAREHOLDERS, AGENTS, CONTRACTORS, INVITEES, OR GUESTS, WHETHER OCCASIONED BY THE INTENTIONAL OR NEGLIGENT ACTS OR OMISSIONS OF LESSEE, ITS EMPLOYEES, OFFICERS, PARTNERS, SHAREHOLDERS, AGENTS,

CONTRACTORS, INVITEES, OR GUESTS, EXCEPT WHEN CAUSED BY THE WILLFUL MISCONDUCT OR NEGLIGENCE OF LESSOR OR ITS OFFICERS, EMPLOYEES AND/OR AGENTS, AND ONLY THEN TO THE EXTENT OF THE PROPORTION OF ANY FAULT DETERMINED AGAINST LESSOR, DART, OR RAILROAD FOR THEIR WILLFUL MISCONDUCT OR GROSS NEGLIGENCE.

Article VIII
Assignment and Sublease; Sale by Lessor

8.01 No Assignment or Sublease; Licenses. Lessee may not sell, assign or sublease its leasehold estate in the Leased Premises or any portion thereof without the prior written approval of Lessor, and any said sale, assignment or sublease without written approval shall terminate this Lease at the option of the Lessor. Notwithstanding the foregoing, Lessee may from time to time may enter into one or more license agreements allowing third parties to engage in activities on the Leased Premises in association with the Permitted Use, provided such license agreement (i) is made expressly subject to this Agreement, (ii) does not extend for a term beyond the end of the Lease Term, and (iii) terminates upon the termination of this Agreement, regardless of how this Agreement is terminated.

8.02 Lessor's Sale of Leased Premises. In the event Lessor sells or transfers title to the Leased Premises or any part thereof to a third party and, as a part of such transaction, assigns its interest as Lessor in and to this Agreement, then from and after the effective date of such sale, assignment, or transfer, Lessor shall have no further liability under this Agreement to Lessee except as to matters of liability which shall have accrued and are unsatisfied as of such date, it being intended that the covenants and obligations contained in this Agreement on the part of the Lessor shall be binding on Lessor and its successors and assigns only during and in respect of their respective successive periods of ownership of the fee title to the Leased Premises.

Article IX
Default and Remedies

9.01 Declaration of Default. Should a Party default in the performance of any covenant, condition, or agreement in this Agreement, and such default is not corrected within ninety (90) days after receipt of written notice from the other Party, or if such default cannot be reasonably corrected in ninety (90), the defaulting Party fails to commence correction of the default within said ninety (90) days and diligently pursues correction of the default, the non-defaulting Party may declare this Agreement, and all rights and interest created by it, to be terminated. If Lessee is the defaulting Party, upon Lessor electing to terminate this Agreement pursuant to this Section 9.01, this Agreement shall cease and come to an end as if that were the day originally fixed herein for the expiration of the Lease Term hereof, and Lessor, its agent or attorney, may resume possession of the Leased Premises.

9.02 Survival of Remedies and Obligations. Any termination of this Agreement shall not relieve the defaulting Party from the payment of any sum or sums that shall then be due and payable to the non-defaulting Party hereunder, or any claim for damages then or theretofore

accruing or to accrue against the defaulting Party hereunder, and any such termination shall not prevent the non-defaulting Party from enforcing the payment of any such sum or sums or claim for damages by any remedy provided for law, or from recovering damages from the defaulting Party for any default thereunder. All rights, options, and remedies of the Parties contained in this Agreement shall be construed and held to be cumulative and no one of them shall be exclusive of the other, and the Parties shall have the right to pursue any one or all of such remedies or any other remedy or relief which may be provided by law, whether or not stated in this Agreement.

9.03 No Waiver. No waiver by a Party of a breach of any of the covenants, conditions, or restrictions of this Agreement shall be construed or held to be a waiver of any succeeding or preceding breach of the same or any other covenant, condition, or restriction herein contained.

Article X
Warranties; Quiet Enjoyment

10.01 Warranty of Title. Lessor hereby represents and warrants that it is the owner, in fee simple absolute of the Leased Premises subject to covenants, conditions, restrictions, easements, and other matters of record.

10.02 Quiet Enjoyment. Subject to Section 4.02, Lessor covenants and agrees that Lessee, on paying the rent required by Section 3.01 and observing and keeping the covenants, conditions, and terms of this Agreement, shall lawfully and quietly hold, occupy, and enjoy the Leased Premises during the Lease Term without hindrance of Lessor or any person claiming under Lessor.

Article XI
Miscellaneous

11.01 Relationship of Parties. The relationship between Lessor and Lessee at all times shall remain solely that of landlord and tenant and not be deemed a partnership or joint venture.

11.02 Binding Agreement. This Agreement shall be binding upon and inure to the benefit of the Parties hereto and their respective successors and assigns where permitted by this agreement.

11.03 Force Majeure. If the curing of any default (other than failure to pay rent or insurance premiums) or the performance of any other covenant, agreement, obligation, or undertaking herein contained is delayed by reason of war, civil commotion, act of God, governmental restrictions (other than those of Lessor or Lessee), fire or other casualty, or any other circumstances beyond a Party's control, regardless of whether any such circumstance is similar to any of those enumerated or not, each such Party shall be excused from doing or performing the same during such period of delay.

11.04 Notices. Any notice, request, demand, approval, consent or election required or permitted to be given under this Agreement shall be in writing and shall be deemed to have been

given when mailed by United States registered or certified mail, postage prepaid, to the other Party at the address set forth below:

If to Lessor:

Denton County Transportation Authority
1955 Lakeway Dr., Ste. 260
Lewisville, Texas 75067
Attention: President

If to Lessee:

Riverside DPH, L.P.
8200 Douglas, Suite 300
Dallas, Texas 75225
Attention: Phillip Huffines

With Copy to:

Peter G. Smith
Nichols, Jackson, Dillard, Hager & Smith, LLP
500 N. Akard, Suite 1800
Dallas, Texas 75201

Any Party may designate another address by giving written notice to the other Party as provided herein.

11.05 Governing Law; Venue. This Agreement will be governed by the laws of the State of Texas. Venue for any action arising from this Easement shall be in a State District Court of Denton County, Texas. The Parties agree to submit to the personal and subject matter jurisdiction of said court.

11.06 Legal Construction. In the event any one or more of the provisions contained in this Agreement are for any reason held to be invalid, illegal, or unenforceable in any respect, such invalidity, illegality, or unenforceability will not affect other provisions, and it is the intention of the Parties to this Agreement that in lieu of each provision that is found to be illegal, invalid, or unenforceable, a provision be added to this Agreement which is legal, valid and enforceable and is as similar in terms as possible to the provision found to be illegal, invalid or unenforceable.

11.07 Recitals. The recitals to this Agreement are incorporated herein.

11.08 Counterparts. This Agreement may be executed in counterparts. Each of the counterparts shall be deemed an original instrument, but all of the counterparts shall constitute one and the same instrument.

11.09 Exhibits. Any exhibits to this Agreement are incorporated herein by reference for all purposes wherever reference is made to the same.

11.10 Amendment. No amendment, modification, or alteration of the provisions of this Agreement shall be binding unless the same be in writing, dated subsequent to the Effective Date and signed by authorized representatives of the Parties.

11.11 Authorization. Each Party represents that it has full capacity and authority to grant all rights and assume all obligations that are granted and assumed under this Agreement.

11.12 Survival of Covenants. Any of the representations, warranties, covenants, and obligations of the Parties, as well as any rights and benefits of the Parties, pertaining to a period of time following the termination of this Agreement shall survive termination.

11.13. Rights Cumulative. The rights and remedies provided by this Agreement are cumulative and the use of any one right or remedy by either Party shall not preclude or waive its right to use any or all other remedies. Said rights and remedies are given in addition to any other rights the Parties may have by law, statute, ordinance, or otherwise.

11.14 Entire Agreement. This Agreement constitute the entire Agreement between the Parties with respect to the subject matter covered in this Agreement. Other than the ILA, there is no other collateral oral or written agreement between the Parties that in any manner relates to the subject matter of this Agreement.

11.15 Effective Date. This Agreement shall be effective when it beard the signatures of authorized representatives of all of the Parties ("the Effective Date").

(signature pages to follow)

SIGNED AND AGREED on this 18 day of August, 2016.

DENTON COUNTY TRANSPORTATION AUTHORITY

By: _____
James C. Cline, Jr., P.E., President

Approved as to form:

By: _____
Peter G. Smith, General Counsel
(06-14-16/77383)

THE STATE OF TEXAS §
§
COUNTY OF DENTON §

This instrument was acknowledged before me on the 18 day of August, 2016, by James C. Cline, Jr., as President of Denton County Transportation Authority, a Texas coordinated county transportation authority, on behalf of said authority.

RUSTY LYNN COMER
Notary Public, State of Texas
My Commission Expires
September 25, 2019

_____
NOTARY PUBLIC, State of Texas
My Commission Expires: September 25, 2019

SIGNED AND AGREED on this 17 day of JUNE, 2016.

Riverside DPH, L.P., a Texas limited partnership

By: Riverside DPH GP, LLC, its general partner

By: _____
Name: Phillip Huffines
Title: MANAGING MEMBER

THE STATE OF TEXAS §
§
COUNTY OF DALLAS §

This instrument was acknowledged before me on the 17 day of June, 2016, by Phillip W. Huffines of Riverside DPH GP, LLC, general partner of Riverside DPH, L.P., a Texas limited partnership.

_____
NOTARY PUBLIC, State of Texas

My Commission Expires: 2-17-17

ROXANNE CABRERA
My Commission Expires
February 17, 2017

EXHIBIT "A"
LEGAL DESCRIPTION

EXHIBIT "A"
PREMISES
0.026 ACRES - (1152 SQUARE FEET)
TRACT OF LAND IN THE JUAN ARMENDARIS SURVEY,
ABSTRACT NO. 28, CITY OF LEWISVILLE,
DENTON COUNTY, TEXAS.

Being a 0.026 acre tract of land situated in the Juan Armendaris Survey, Abstract No. 28, Denton County, Texas and being a portion of Lot 1, Block A, as recorded in County Clerk Document Number 2009-167, Plat Records, Denton County, Texas, and being more particularly described as follows:

BEGINNING at the northeast corner of Lot 2, Block E, Hebron 121 Station Addition, Phase 4, as recorded in Document Number 2016-51, Plat Records, Denton County, Texas, also being in the south line of said Lot 1;

THENCE, South 89°42'33" East, along the north line of said Lot 2 and the south line of said Lot 1, a distance of 144.76 feet to a point for the beginning of a non-tangent curve to the right having a radius of 226.62 feet and a central angle of 37°15'12" and a long chord which bears North 89°42'33" East, 144.76 feet;

THENCE, departing the south line of said Lot 1 and the north line of said Lot 2, along said non-tangent curve to the right an arc distance of 147.35 feet to the POINT OF BEGINNING and CONTAINING 1152 square feet, 0.026 acres of land, more or less.



EXHIBIT "A"
LEGAL DESCRIPTION

P4.01

EXHIBIT A
BEING A 0.05 ACRE (2,193 SQ.FT.) DRIVEWAY ACCESS
DOCUMENT No. 2009-167, PLAT RECORDS, DENTON COUNTY, TEXAS
SITUATED IN THE A.J. HITCHCOCK SURVEY, ABSTRACT No. 614
CITY OF LEWISVILLE, DENTON COUNTY, TEXAS

BEING a 0.05 acre tract of land out of the A.J. Hitchcock Survey, Abstract No.614, City of Lewisville, Denton County, Texas and being a portion of Lot 1, Block A, DCTA Hebron Station Addition, as recorded in Document No. 2009-167, Plat Records, Denton County, Texas, and being more particularly described as follows:

COMMENCING at a found 1/2 inch iron rod with "GRAHAM ASSOC INC." (GAI) cap, being in the north line of Lot 4, Block B, Hebron 121 Station Addition, as recorded in Document No. 2016-51, Plat Records, Denton County, Texas, and the south line of said Lot 1, being a common line;

THENCE South 89°42'33" East, along said common line, a distance of 27.94 feet to the **POINT OF BEGINNING** for the beginning of a non-tangent curve to the left having a radius of 18.50 feet, a central angle of 49°03'54", and a long chord that bears North 14°07'07" West, 15.36 feet;

THENCE along said non-tangent curve to the left, an arc length of 15.84 feet to a point;

THENCE North 38°39'04" West, a distance of 31.43 feet to a point for the beginning of a tangent curve to the left having a radius of 23.50 feet, a central angle of 20°10'07", and a long chord that bears North 48°44'07" West, 8.23 feet;

THENCE along said tangent curve to the left, an arc length of 8.27 feet to a point, being in the north line of said Lot 1 and the south right-of-way line of Lakeside Circle (Variable Width Right-of-Way), being a common line, for the beginning of a non-tangent curve to the left having a radius of 262.00 feet, a central angle of 04°58'37", and a long chord that bears North 62°47'57" East, 22.75 feet;

THENCE along said common line and said non-tangent curve to the left, an arc length of 22.76 feet to a point for the beginning of a compound curve to the left having a radius of 347.93 feet, a central angle of 02°52'05", and a long chord that bears North 58°52'35" East, 17.42 feet;

THENCE along said common line and said compound curve to the left, an arc length of 17.42 feet to a point for the beginning of a non-tangent curve to the left having a radius of 23.50 feet, a central angle of 49°07'48", and a long chord that bears South 14°05'10" East, 19.54 feet;

THENCE along said non-tangent curve to the left and leaving said common line, an arc length of 20.15 feet to a point;

THENCE South 38°39'04" East, a distance of 21.64 feet to a point for the beginning of a tangent curve to the left having a radius of 134.50 feet, a central angle of 18°16'21", and a long chord that bears South 47°47'14" East, 42.71 feet;

Sheet 2 of 3

EXHIBIT "B"
DEPICTION

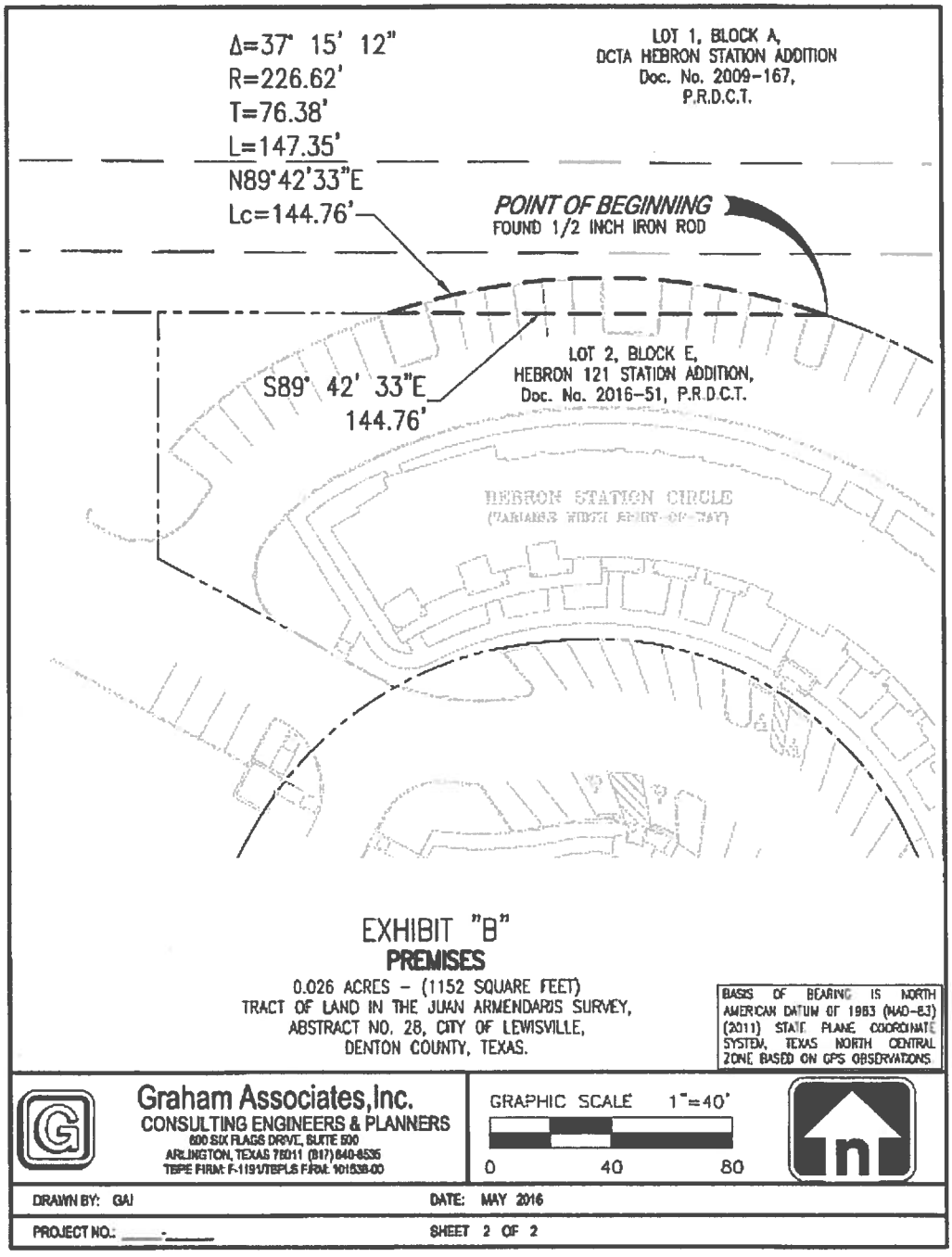

EXHIBIT "B"
DEPICTION

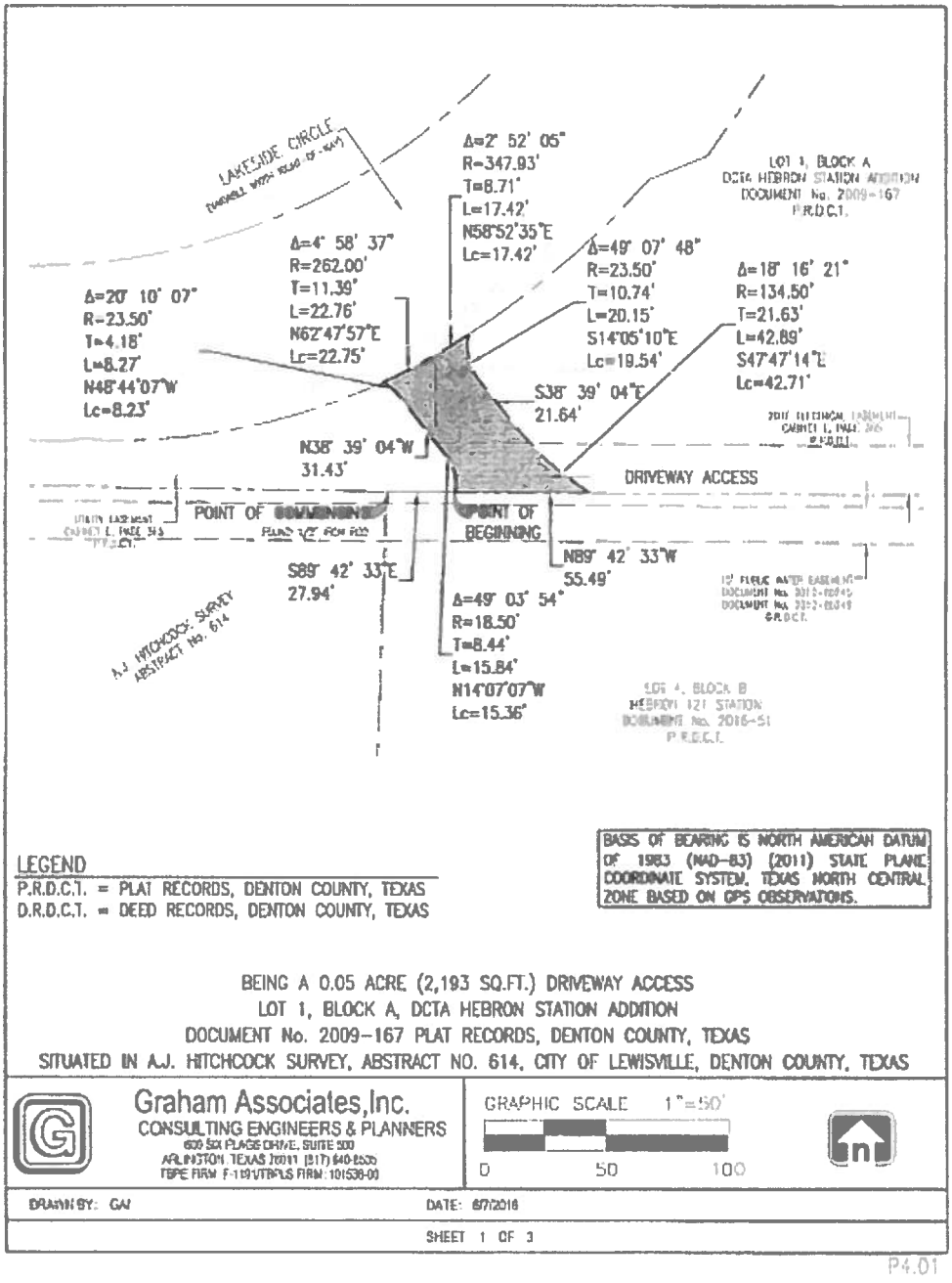

FIRST AMENDMENT TO GROUND LEASE AGREEMENT

This First Amendment to Ground Lease Agreement (this "**First Amendment**") is made effective as of May 4, 2017, by and between **Denton County Transportation Authority**, a Texas coordinated county transportation authority ("**Lessor**"), and **Riverside DPH, L.P.**, a Texas limited partnership ("**Lessee**").

RECITALS

A. Lessee and Lessor entered into that certain Ground Lease Agreement with an Effective Date of August 18, 2016 (the "**Agreement**").

B. Lessee and Lessor desire to modify the Agreement upon and subject to the terms and conditions set forth in this First Amendment.

AGREEMENT

NOW, THEREFORE, for and in consideration of the Recitals, and for other good and valuable consideration, the receipt and sufficiency of which are hereby acknowledged, Lessor and Lessee hereby amend the Agreement as follows:

1. Recitals; Capitalized Terms. The foregoing recitals are true and correct and are incorporated herein by this reference. Unless otherwise defined herein, all capitalized terms used in this First Amendment shall have the same meanings as assigned to such capitalized terms in the Agreement.

2. Irrigation and Maintenance. During the Initial Lease Term and each Extension Term thereafter, Lessee shall have the right but not the obligation to install irrigation and maintain landscaping in the areas shown on **Exhibit A** attached hereto.

3. Miscellaneous.

(a) Except as amended hereby, the terms of the Agreement remain unchanged and in full force and effect as originally written.

(b) Lessor and Lessee acknowledge and agree that there are no unwritten, oral agreements between the parties and that this First Amendment may be amended, modified or changed only by a traditional written document properly executed by the parties.

(c) In the event of any conflict between the meaning of any provision of this First Amendment and any provision of the Agreement, the provisions of this First Amendment shall control.

(d) All the covenants, terms, and conditions set forth herein shall be binding upon and shall inure to the benefit of the parties hereto and their respective heirs, executors, administrators, legal representatives, successors, and assigns.

(e) This First Amendment may be executed in multiple counterparts and may be transmitted by e-mail, facsimile, or other method permitted by the provisions for giving notice in the Agreement, and in several counterparts, and each counterpart shall constitute an original instrument, and all counterparts shall constitute one and the same instrument.

IN WITNESS WHEREOF, the parties hereto have entered into this First Amendment as of the Effective Date.

LESSOR: **Denton County Transportation Authority**

By: James C. Cline
Name: James C. Cline, Jr.
Title: President

Date Signed: 11 May 2017

LESSEE: **Riverside DPH, L.P.,**
a Texas limited partnership

By: **Riverside DPH GP, LLC,**
its General Partner

By:
Name: Phillip Huffines
Title: Managing Member

Date Signed: May 12, 2017

EXHIBIT A

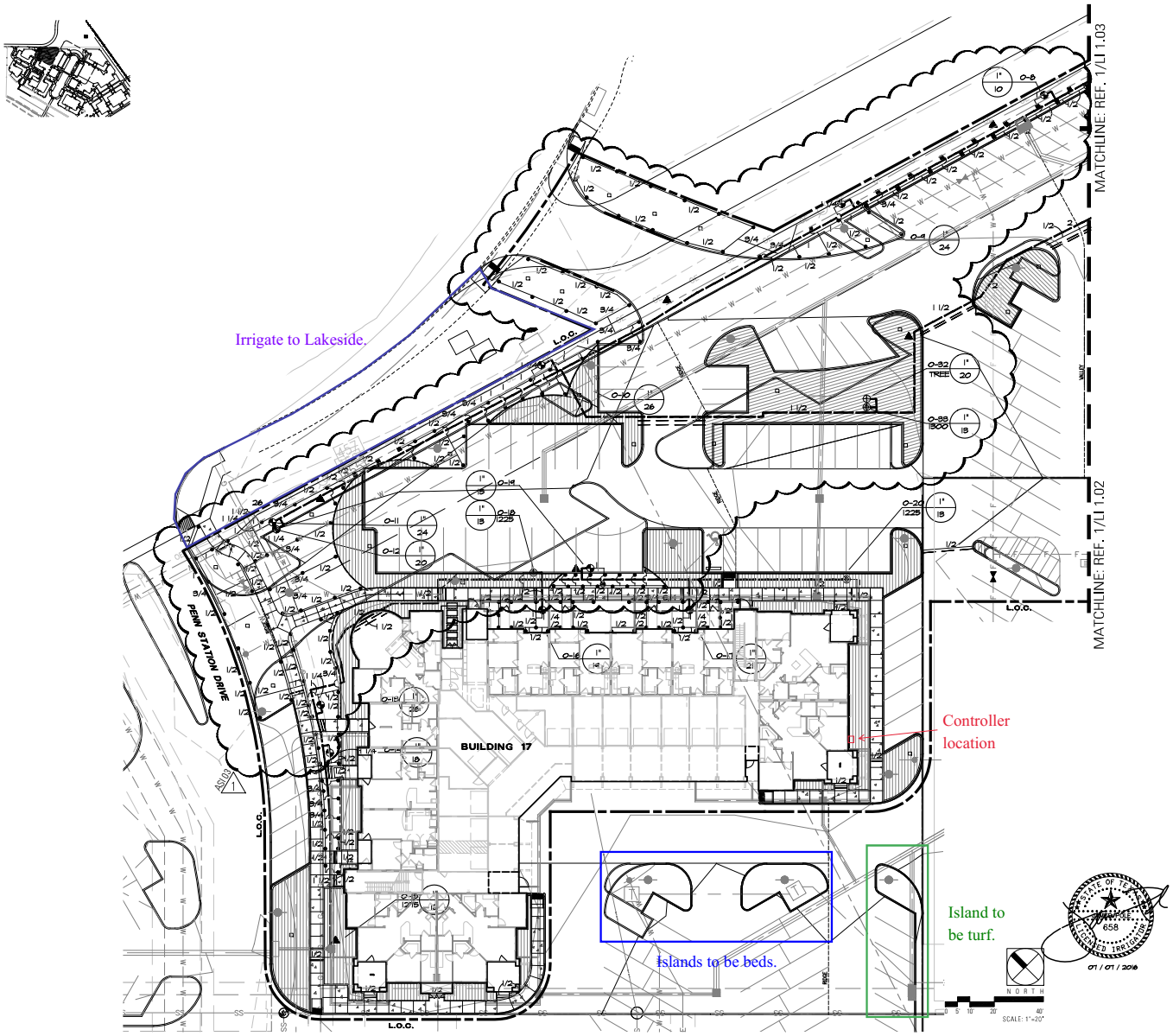

James Pole
IRRIGATION CONSULTANTS
IRRIGATION DESIGN, CONSULTING, AND LANDSCAPE WATER MANAGEMENT
TEXAS L.I.C. #658
100 N. LOCUST ST., SUITE 5
DENTON, TEXAS 76201
PHONE: 940.248.2844
FAX: 940.382.2475
james@jamespoleirrigation.com

IRRIGATION IN TEXAS IS REGULATED BY THE TEXAS COMMISSION ON ENVIRONMENTAL QUALITY (TCEQ) (MC-178) P.O. BOX 13087 T.C.E.Q.'S WEB SITE IS: WWW.TCEQ.STATE.TX.US.

TBG
Landscape Architects • Planners
2001 Bryan Street, Suite 1450
Dallas, Texas 75201
(214) 744-0757 Fax: (214) 744-6785
Austin • Dallas • Fort Lauderdale
Fort Worth • Houston • San Antonio • Tulsa

Project:
HEBRON 121
PHASE 4

HUFFINES COMMUNITITES
8200 DOUGLAS AVE
DALLAS, TX 75225

ISSUE FOR CONSTRUCTION

DALLAS, TEXAS

Project Number:

Designed: AE
Drawn: AE
Reviewed: MP

Date Issued:
JANUARY 12, 2016

Revisions:
1 07/07/2016: ASI 03

Sheet Title:
IRRIGATION PLAN

Sheet Number:
LI 1.01

Z:\Tbg\Hebron 121\Hebron 121 Phase 4 CD\14430\02 Permit\Sheets\DS-LI\DI4430-LI1-01.dwg

U.S. Department
of Transportation
Federal Transit Administration

REGION VI
Arkansas, Louisiana,
New Mexico, Oklahoma,
Texas

819 Taylor St. Suite 14A02
Fort Worth, TX 76102
817-978-0550
817-978-0575 (fax)

August 17, 2016

Ms. Kristina Brevard
Vice President, Planning and Development
Denton County Transportation Authority
P.O. BOX 96
Lewisville, TX 75067

Re: Review of joint development project

Dear Ms. Brevard:

Denton County Transportation Authority (DCTA) submitted a Federal Transit Administration (FTA) Joint Development Project Request form for review and concurrence involving a long-term lease of a partial parcel of real property located at DCTA's Hebron Park & Ride facility. The Contractor, Huffines Developers, is constructing an apartment complex on a property adjacent to the DCTA facility. Under this joint development project, the contractor will construct and maintain a driveway and hike/bike trail between the two properties. The project requires the lease of an unimproved portion of property at the DCTA facility site. DCTA purchased this property for the Hebron Park & Ride facility under Grant Number TX 95-X002-00.

The property for this joint development project consists of 0.09 acres (3,993 square feet). This joint development project is located at 952 Lakeside Circle, Lewisville, Texas. The partial parcel is being leased to the joint developer to support the construction of a hike/bike trail and driveway along a boundary line of the Hebron Park & Ride Station. The lease will not interfere with DCTA's transit purposes.

The value of this partial parcel is $2,810. Huffines Developers will construct the hike/bike trail and driveway as an in-kind payment. DCTA has complied with FTA's joint development process and requirements. FTA therefore concurs with this request.

If you have any questions or comments, please contact me or Brian Hooker, Regional Engineer, at (817) 978-0568 or Brian.Hooker@dot.gov.

Sincerely,

for Robert C. Patrick
Regional Administrator

Graham Associates, Inc.
CONSULTING ENGINEERS & PLANNERS

Memo

To:	Ms. Kristina Brevard
From:	Amanda Mata
Date:	April 27, 2016
Subject:	Hebron 121 Station / DCTA Station Shared Elements

The following is a technical scope of work for each project element that will be included in the agreement between the DCTA property and the Hebron 121 Station development:

1. Driveway
   Construct approximately 100 linear feet of 28-foot wide concrete driveway from Lakeside Circle to Hebron 121 Station development.

2. Bike/Pedestrian Trail
   Construct approximately 680 linear feet of 10-foot wide concrete sidewalk along the east side of the DCTA property and within the Hebron 121 Station development.

3. Parking Spaces
   Construct portions of approximately 14 standard concrete parking stalls within DCTA property.

4. Lighting
   Construct appropriate lighting and required utilities for power along bike/pedestrian trail.

5. Earthwork
   Complete appropriate earthwork and grading to install improvements.

Fort Worth
1300 Summit Avenue, Suite 419
Fort Worth, Texas 76102
817.332.5756
Fax 817.336.6909

Arlington
600 Six Flags Drive, Suite 500
Arlington, Texas 76011
817.640.8535
Fax 817.633.5240

Frisco
10880 John W. Elliot, Suite 200
Frisco, Texas 75033
214.618.3114

Board of Directors Memo July 23, 2020

SUBJECT: Approval of Resolution R20-10 Ratifying FY2020 Budget Amendment 2020-06 for the Described Land Acquisition

Background

The Board approved the land acquisition to purchase Lot 1, Block A, Elm Fork Industrial Park, an Addition to the City of Lewisville, Texas, for a purchase price not to exceed $2,300,000 plus all closing and other acquisition costs, including, but not limited to, relocation costs required by state and federal law at the June Board meeting upon coming out of closed session.

Financial Impact

The total amount of the property including closing costs is $2,323,890 scheduled for FY21. Associated relocation expenses are estimated for FY23 at a total of $528,100, for a total purchase price of the land of $2,851,990.

This project will be funded by FY18 Congestion Mitigation & Air Quality (CMAQ) funds at an 80/20 federal/local match with $11,301,056 in federal funds and 2,260,211 in Transportation Development Credits utilized in lieu of local match. The funds are Federal Highway Administration (FHWA) CMAQ flex funds transferred from the Metropolitan Planning Organization (MPO) North Central Texas Council of Governments (NCTCOG).

The Capital/Infrastructure Reserve Fund will also be reduced by $3.5 million since the land purchase will be fully reimbursed by grant revenue.

Recommendation

Staff is seeking approval of Resolution R20-10 ratifying the Board's approval of budget amendment 2020-06 for the land acquisition.

Exhibits

Exhibit 1: Resolution R20-10 ratifying FY2020 Budget Amendment 2020-06 (with Exhibit 1a)
Exhibit 2: Year to Date FY2020 Budget Revisions

Submitted By: Amanda Riddle
Amanda Riddle
Senior Manager of Budget

Final Review:
Marisa Perry, CPA
Chief Financial Officer/VP of Finance

Approval:
Raymond Suarez, CEO

DENTON COUNTY TRANSPORTATION AUTHORITY
RESOLUTION NO. R20-10

A RESOLUTION OF THE BOARD OF DIRECTORS OF THE DENTON COUNTY TRANSPORTATION AUTHORITY (DCTA) APPROVING FISCAL YEAR 2020 BUDGET AMENDMENT NUMBER 2020-06 REVISED CAPITAL AND OPERATING BUDGET AMENDMENTS, ATTACHED HERETO AS EXHIBIT "1a", RESPECTIVELY; PROVIDING A REPEALING CLAUSE; AND PROVIDING AN EFFECTIVE DATE.

WHEREAS, DCTA budget is a well calculated estimate as to what will be needed for expenditures in the fiscal year; and

WHEREAS, budget estimates are often prepared months in advance of the actual expenditures and the possibility that the actual amount of the expenditure will be known in exact terms at the time of the budget preparation is unlikely; and

WHEREAS, during the fiscal year, it may become necessary to reforecast the annual expenditures and modify the budget by amendment; and

WHEREAS, the Board of Directors of the DCTA desires to amend the fiscal year 2020 Operating and Capital Budget as set forth in Exhibit "1a", respectively.

NOW, THEREFORE, BE IT RESOLVED BY THE BOARD OF DIRECTORS OF THE DENTON COUNTY TRANSPORTATION AUTHORITY, THAT:

SECTION 1. The Budget Amendment number attached hereto as Exhibit "1a", respectively, be, and the same are hereby adopted and which shall amend the original budget adopted September 26, 2019, from and after the effective date of this Resolution.

SECTION 2. All provisions of the resolutions of the Board of Directors of the DCTA, in conflict with the provisions of this Resolution be, and the same are hereby, repealed, and all other provisions not in conflict with the provisions of this Resolution shall remain in full force and effect.

SECTION 3. This Resolution shall become effective immediately upon its passage and approval.

DULY PASSED AND APPROVED BY THE BOARD OF DIRECTORS OF THE DENTON COUNTY TRANSPORTATION AUTHORITY THE 23RD DAY OF JULY, 2020.

APPROVED:

Dianne Costa, Chair

ATTEST:

Sam Burke, Secretary
(07-15-2020:TM 116783)

Exhibit "1a"
FY20 Budget Amendment
(to be attached)

DENTON COUNTY TRANSPORTATION AUTHORITY (DCTA)

BUDGET TRANSFER / REVISION REQUEST

TRANSACTION TYPE: Transfer ☐ Revision ☑ Number: 2020-06

			Current Budget Amount	Budget Revision Amount	Adjusted Budget Amount
ADDITIONS TO CAPITAL BUDGET AND CAPITAL SOURCES					
Project Expense:	10302	Infrastructure Acquisition	$ 400,000	$ 2,851,990	$ 3,251,990
Project Funding:	40410	Federal Capital Grants	1,025,887	2,851,990	3,877,877
		Net Revision Impact		$ -	

EXPLANATION: The total amount of the property including closing costs is $2,323,890.33 scheduled for FY21. Associated relocation expenses are estimated for FY23 at a total of $528,100, for a total purchase price of the land of $2,851,990.

This project will be funded by FY18 Congestion Mitigation & Air Quality (CMAQ) funds at an 80/20 federal/local match with $11,301,056 in federal funds and 2,260,211 in Transportation Development Credits utilized in lieu of local match. The funds are Federal Highway Administration (FHWA) CMAQ flex funds transferred from the Metropolitan Planning Organization (MPO) North Central Texas Council of Governments (NCTCOG).

The Capital/Infrastructure Reserve Fund will also be reduced by $3.5 million since the land purchase will be fully reimbursed by grant revenue.

DATE: 6.22.2020 REQUESTED BY: Amanda Riddle

DATE: REVIEWED BY:

DATE: CEO: Raymond Suarez

YEAR-TO-DATE FY20 BUDGET REVISIONS

DCTA 2020-01 (Presented to DCTA Board February 27, 2020) *Budget Transfer - No Approval Necessary; Completed*					
			Adopted Budget	Revision	Revised Budget
Rail:	620-50318	Facilities Maintenance	$ 102,612	$ 91,914	$ 194,526
	620-50810	Purchased Transportation	10,068,545	(100,000)	9,968,545
	620-50309	Professional Services	30,000	100,000	130,000
	620-50410	Fuel	975,000	(117,776)	857,224
G&A:	100-50309	Professional Services	305,479	32,850	338,329
	110-50309	Professional Services	11,000	15,120	26,120
	110-50440	Computer & Software Supplies	-	5,500	5,500
	130-50309	Professional Services	296,000	(89,476)	206,524
	900-40400	Operating Grant Funds	(5,253,753)	123,334	(5,130,419)
Bus:	590-50455	Parts	685,600	(72,000)	613,600
	533-50810	Purchased Transportation	-	1,000	1,000
	533-50440	Computer & Software Supplies	-	33,000	33,000
	531-50313	Computer & Software Maintenance	-	5,000	5,000
	570-50309	Professional Services	-	33,000	33,000
	200-50410	Fuel	342,730	(33,440)	309,290
	511-50410	Fuel	468,666	(28,026)	440,640
		Net Budget Impact		$ -	

DCTA 2020-02 (Presented to DCTA Board February 27, 2020) *Approved by DCTA Board in February; Completed*					
			Working Budget	Revision	Revised Budget
130.50309		Professional Services	$ 206,524	$ (1,551)	$ 204,973
		Finance Salary & Benefits	1,221,395	61,616	1,283,011
100.50315		Legal Fees	110,000	69,211	179,211
		Transfers Out	(8,781,700)	(20,724)	(8,802,424)
		Net Budget Impact		$ 150,000	

NTMC 2020-N001 (Presented to NTMC Board February 28, 2020) *Approved by NTMC Board in May; Completed*					
			Adopted Budget	Revision	Revised Budget
		Bus Maintenance Salary & Benefits	$ 1,150,815	$ (60,065)	$ 1,090,750
700.50315		Legal Fees	-	80,789	80,789
		Transfers In	8,781,700	20,724	8,802,424
		Net Budget Impact		$ -	

DCTA 2020-03 (Presented to DCTA Board March 26, 2020) *Budget Transfer - No Approval Necessary; Completed*					
			Working Budget	Revision	Revised Budget
10606		Professional Planning Services Project	$ 99,178	$ (99,178)	$ -
50601		Train-the-Trainer Project	221,875	(221,875)	-
500-50309		Professional Services	275,000	321,053	596,053
		Net Budget Impact		$ -	

DCTA 2020-04 (Presented to DCTA Board May 27, 2020)

Approved by DCTA Board in May; Completed

	Working Budget	Revision	Revised Budget
OPERATING REVENUE:			
Passenger Revenues (Bus Farebox)	$ 624,049	$ (253,458)	$ 370,591
Passenger Revenues (Rail Farebox)	588,272	(166,694)	421,578
OPERATING EXPENSES:			
Salary, Wages & Benefits	5,057,807	(398,073)	4,659,734
Services	3,970,777	(165,300)	3,805,477
Materials & Supplies	3,094,917	(540,456)	2,554,461
Utilities	527,988	(37,000)	490,988
Purchased Transportation	10,601,706	(330,072)	10,271,634
Employee Development	387,237	(90,302)	296,935
NON-OPERATING REVENUES:			
Investment Income	400,000	(75,000)	325,000
Sales Tax Revenue	29,019,184	(7,554,732)	21,464,452
Federal Grants & Reimbursements	10,103,440	3,323,319	13,426,759
State Grants & Reimbursements	780,389	(341,841)	438,548
CAPITAL PROJECTS:			
PTC Enhancements	1,780,555	(1,630,555)	150,000
Fleet 2019	1,481,000	(1,471,000)	10,000
Fleet 2020	1,062,600	(1,062,600)	-
Transfers Out	8,802,424	(802,077)	8,000,347
Net Budget Impact		$ 1,459,029	

NTMC 2020-N002 (Presented to NTMC Board May 27, 2020)

Approved by NTMC Board in May; Completed

	Working Budget	Revision	Revised Budget
Denton Fixed Route Service Reductions:			
Salary & Benefits	$ 1,708,103	$ (474,951)	$ 1,233,152
Lewisville Fixed Route Service Reductions:			
Salary & Benefits	837,587	(222,319)	615,268
Highland Village Fixed Route Service Reductions:			
Salary & Benefits	172,176	(86,307)	85,869
Employee Development - Travel	21,600	(18,500)	3,100
Transfer Salary & Benefit Savings for addition of GM Contract:			
Salary & Benefits	1,608,614	(85,800)	1,522,814
Professional Services	-	85,800	85,800
Transfers In	8,802,424	(802,077)	8,000,347
Net Budget Impact		$ -	

DCTA 2020-05 (Presented to DCTA Board June 25, 2020)

Approved by DCTA Board in June; Completed

		Working Budget	Revision	Revised Budget
110-50309	Board - Professional Services	$ 26,120	$ 667,000	$ 693,120
	Net Budget Impact		$ 667,000	

DCTA 2020-06 (Presented to DCTA Board June 25, 2020)

Approved by DCTA Board in June; Presented for Ratification by Resolution in July

		Working Budget	Revision	Revised Budget
10302	Infrastructure Acquisition	$ 400,000	$ 2,851,990	$ 3,251,990
40410	Federal Capital Grants	1,025,887	2,851,990	3,877,877
	Net Budget Impact		$ -	

Board of Directors Memo

July 23, 2020

SUBJECT: Monthly Sales Tax Receipts

Background

Sales tax represents the single largest source of revenue for DCTA at 52.46% for the Fiscal Year 2020 budget. The annual revised sales tax budget for FY20 is $21,464,452. Because of its importance in funding of DCTA's ongoing operations, the Board adopted a Budget Contingency Plan that outlines the Agency's response when declines in sales tax hit a specific target.

For the month of July, receipts were favorable compared to the revised budget.

- Sales tax for sales generated at retail in the month of May and received in July was $2,400,743.
- This represents an increase of 132.16% or $1,366,671 compared to budget for the month.
- Compared to the same month last year, sales tax receipts are $93,451 or 4.05% higher.

- Member city collections for the month compared to prior year are as follows:
  - City of Lewisville up 4.49%
  - City of Denton down 0.64%
  - City of Highland Village down 8.59%

Identified Need

Provides the Board of Directors a monthly status on Sales Tax collections.

Recommendation

For information only. No action required.

Exhibits

Exhibit 1: FY20 Monthly Sales Tax Report

Submitted By: Amanda Riddle

Amanda Riddle
Senior Manager of Budget

Final Review:

Marisa Perry, CPA
Chief Financial Officer/VP of Finance

DENTON COUNTY TRANSPORTATION AUTHORITY

SALES TAX REPORT
BUDGET TO ACTUAL AND PREVIOUS YEAR COMPARISON

Sales Generated in Month of:	Received in Month of:	2019-2020 Original Budget	2019-2020 Revised Budget	2019-2020 Year Actual	Variance Actual to Budget	CY Actual to CY Budget % Variance	2018-2019 Year Actual	Variance Actual to Prior Year	CY Actual to PY Actual % Variance
October	December	$ 2,353,270	$ 2,329,419	$ 2,329,419	$ -	0.00%	$ 2,307,128	$ 22,291	0.97%
November	January	$ 2,338,596	$ 2,188,220	$ 2,188,220	$ -	0.00%	$ 2,292,741	$ (104,521)	-4.56%
December	February	$ 2,888,362	$ 3,191,714	$ 3,191,714	$ -	0.00%	$ 2,831,728	$ 359,986	12.71%
January	March	$ 2,111,018	$ 2,268,362	$ 2,268,362	$ -	0.00%	$ 2,069,625	$ 198,737	9.60%
February	April	$ 2,064,564	$ 2,114,448	$ 2,114,448	$ -	0.00%	$ 2,024,082	$ 90,366	4.46%
March	May	$ 2,525,343	$ 2,503,274	$ 2,503,274	$ -	0.00%	$ 2,475,826	$ 27,448	1.11%
April	June	$ 2,534,129	$ 1,183,731	$ 2,185,555	$ 1,001,824	84.63%	$ 2,484,440	$ (298,886)	-12.03%
May	July	$ 2,234,810	$ 1,034,072	$ 2,400,743	$ 1,366,671	132.16%	$ 2,307,292	$ 93,451	4.05%
June	August	$ 2,627,865	$ 1,230,599				$ 2,656,359		
July	September	$ 2,225,018	$ 1,029,176				$ 2,447,195		
August	October	$ 2,441,366	$ 1,137,350				$ 2,312,424		
September	November	$ 2,674,843	$ 1,254,087				$ 2,552,054		
YTD Total		$ 29,019,184	$ 21,464,452	$ 19,181,734	$ 2,368,494	14.09%	$ 28,760,896	$ 388,872	2.07%

Sources: Texas Comptroller of Public Accounts and DCTA Finance Department
Prepared By: Denton County Transportation Authority Finance Department
July 14, 2020

DENTON COUNTY TRANSPORTATION AUTHORITY

MEMBER CITIES SALES TAX REPORT
MONTH ALLOCATION IS RECEIVED FROM COMPTROLLER
PREVIOUS YEAR COMPARISON

CITY OF LEWISVILLE

Sales Generated in Month of:	Received in Month of:	2018-2019 Year Actual	2019-2020 Year Actual	Variance Actual to Prior Year	CY Actual to PY Actual % Variance
October	December	$ 3,287,654	$ 3,282,870	$ (4,784)	-0.15%
November	January	$ 3,193,613	$ 2,904,782	$ (288,831)	-9.04%
December	February	$ 4,003,626	$ 4,407,090	$ 403,465	10.08%
January	March	$ 3,029,803	$ 3,148,942	$ 119,140	3.93%
February	April	$ 2,965,849	$ 2,987,194	$ 21,344	0.72%
March	May	$ 3,631,625	$ 3,733,423	$ 101,799	2.80%
April	June	$ 3,806,587	$ 3,294,690	$ (511,898)	-13.45%
May	July	$ 3,253,159	$ 3,399,328	$ 146,168	4.49%
June	August	$ 3,620,748			
July	September	$ 3,382,881			
August	October	$ 3,226,407			
September	November	$ 3,574,678			
YTD Total		$ 40,976,630	$ 27,158,318	$ (13,598)	-0.05%

CITY OF HIGHLAND VILLAGE

Sales Generated in Month of:	Received in Month of:	2018-2019 Year Actual	2019-2020 Year Actual	Variance Actual to Prior Year	CY Actual to PY Actual % Variance
October	December	$ 319,132	$ 357,488	$ 38,356	12.02%
November	January	$ 311,524	$ 356,224	$ 44,700	14.35%
December	February	$ 446,811	$ 521,121	$ 74,309	16.63%
January	March	$ 283,228	$ 338,734	$ 55,507	19.60%
February	April	$ 258,782	$ 262,811	$ 4,029	1.56%
March	May	$ 344,912	$ 322,245	$ (22,667)	-6.57%
April	June	$ 304,322	$ 267,280	$ (37,043)	-12.17%
May	July	$ 340,531	$ 311,278	$ (29,254)	-8.59%
June	August	$ 523,000			
July	September	$ 322,509			
August	October	$ 316,585			
September	November	$ 382,932			
YTD Total		$ 4,154,270	$ 2,737,180	$ 127,937	4.90%

CITY OF DENTON

Sales Generated in Month of:	Received in Month of:	2018-2019 Year Actual	2019-2020 Year Actual	Variance Actual to Prior Year	CY Actual to PY Actual % Variance
October	December	$ 2,875,467	$ 2,887,178	$ 11,711	0.41%
November	January	$ 2,933,274	$ 2,911,334	$ (21,940)	-0.75%
December	February	$ 3,667,687	$ 4,230,616	$ 562,929	15.35%
January	March	$ 2,435,272	$ 2,902,937	$ 467,665	19.20%
February	April	$ 2,397,631	$ 2,571,667	$ 174,036	7.26%
March	May	$ 3,229,426	$ 3,061,108	$ (168,318)	-5.21%
April	June	$ 2,945,196	$ 2,521,781	$ (423,415)	-14.38%
May	July	$ 2,897,074	$ 2,878,630	$ (18,444)	-0.64%
June	August	$ 3,479,089			
July	September	$ 3,190,582			
August	October	$ 2,955,618			
September	November	$ 3,396,022			
YTD Total		$ 36,402,338	$ 23,965,251	$ 584,224	2.50%

Sources: Texas Comptroller of Public Accounts and DCTA Finance Department
Prepared By: Denton County Transportation Authority Finance Department
July 14, 2020

ALL TRANSIT AGENCIES

MONTHLY SALES AND USE TAX COMPARISON SUMMARY

Transit Agency	Current Rate	Net Payment This Period	Comparable Payment Prior Year	% Change	Payments YTD (Calendar)	Prior Year Payments YTD (Calendar)	% Change
Austin MTA	1.00%	$ 19,686,848	$ 21,306,704	-7.60%	$ 151,826,580	$ 150,391,985	0.95%
Corpus Christi MTA	0.50%	$ 2,791,009	$ 2,862,654	-2.50%	$ 19,419,984	$ 19,725,301	-1.54%
Dallas MTA	1.00%	$ 45,262,179	$ 49,646,030	-8.83%	$ 355,007,280	$ 362,296,661	-2.01%
Denton CTA	0.50%	$ 2,400,743	$ 2,307,292	4.05%	$ 16,852,316	$ 16,485,735	2.22%
El Paso CTD	0.50%	$ 3,583,449	$ 3,712,677	-3.48%	$ 27,685,987	$ 27,283,797	1.47%
Fort Worth MTA	0.50%	$ 6,261,108	$ 6,352,344	-1.43%	$ 46,601,512	$ 47,534,394	-1.96%
Houston MTA	1.00%	$ 56,764,076	$ 64,188,395	-11.56%	$ 444,678,174	$ 452,647,184	-1.76%
Laredo CTD	0.25%	$ 652,428	$ 665,013	-1.89%	$ 4,770,365	$ 4,915,782	-2.95%
San Antonio ATD	0.25%	$ 5,446,477	$ 5,627,642	-3.21%	$ 40,595,672	$ 41,506,265	-2.19%
San Antonio MTA	0.50%	$ 12,115,621	$ 12,451,330	-2.69%	$ 90,564,650	$ 91,480,070	-1.00%
TOTALS		$ 154,963,939	$ 169,120,080	-8.37%	$ 1,198,002,521	$ 1,214,267,174	-1.34%

Sources: Texas Comptroller of Public Accounts and DCTA Finance Department
Prepared By: Denton County Transportation Authority Finance Department
July 14, 2020

Board of Directors Memo

July 23, 2020

SUBJECT: Monthly Mobility-as-a-Service Update

Background

A Request for Proposals (RFP) was released on January 16, 2019 for Mobility as a Service (MaaS). Firms were invited to submit proposals (for both federal and non-federal funding project categories) to provide innovative mobility service to DCTA member cities, DCTA contract communities, partner organizations, as well as large employment centers and other areas as the need arises. On March 12, 2019, DCTA received thirty-seven (37) proposals in response to the RFP. Thirty-three (33) proposals were deemed responsive and were evaluated by the evaluation team. The evaluation team rejected two proposals that scored less than seventy (70) points and recommended award to thirty-one (31) firms. The Board of Directors approved the award of Mobility-as-a-Service to thirty-one firms and reduced the total annual contract value of $2,400,000 to $75,000 for all task orders issued under the master on-call contracts. One of the recommended firms will not execute a contract due to business operational changes; therefore, thirty (30) firms remain eligible for contract execution. As requested by the Board of Directors, staff is providing a monthly update on all Mobility-as-a-Service commitments, activities and expenses.

To date, the following twenty-six contracts have been fully executed:

- AJL International
- Bird Rides
- Bubbl Investments, LLC.
- Dashboard Story dba DUET
- DemandTrans Solutions
- DoubleMap
- Downtowner Holdings, LLC.
- First Transit
- Ford Smart Mobility, LLC.
- Irving Holdings
- Iteris
- Kapsch
- Lyft
- Moovel
- Moovit
- MV Transportation
- Muve: Quebec, Inc.
- Quebec, Inc. dba Transit
- RideCo
- Rideshark Corporation
- River North (Via)
- Roundtrip
- Routematch
- Spare Labs, Inc.
- Spare Labs, Inc. (with First Transit)
- Transdev North America

The remaining four contracts, all with software companies (Passport, SeatsX, Token Transit and Transloc), have been placed on hold until a need arises to enter into a contract for software.

Financial Impact

Task Order #1 – Lewisville Lakeway Zone and Denton Evening Zone was approved for award at the June Board meeting and was issued on 6/30/2020 for a not-to-exceed amount of $200,000.

Task Order #2 – On-Demand Services was discussed at the June Board meeting and will be presented at the August Board meeting for award consideration.

Identified Need

Provides the Board of Directors a monthly status on Mobility-as-a-Service Contracts.

Recommendation

For information only. No action required.

Submitted By: _____
Sarah Martinez, Director of Procurement

Final Review: _____
Raymond Suarez, Chief Executive Officer

Board of Directors Memo

July 23, 2020

SUBJECT: Budget Information

There were no budget transfers completed in the month of June to report.

Identified Need

Provides the Board of Directors a monthly status on any budget transfers completed.

Recommendation

For information only. No action required.

Exhibits

N/A

Submitted By: Amanda Riddle

Amanda Riddle
Senior Manager of Budget

Final Review:

Marisa Perry, CPA
Chief Financial Officer/VP of Finance

Board of Directors Memo July 23, 2020

SUBJECT: Ridership Trend Report

Background

Beginning in March 2020, DCTA staff began a series of special COVID-related ridership tabulations to gain a better understanding of the ridership impacts associated with the pandemic and ensuing service changes. Exhibits 1-4 provide an overview of total monthly ridership trends across all DCTA services--comparing FY19 and FY20 with the associated COVID impacts.

Noteworthy is that A-train and Connect May-June ridership each increased by approximately 23 percent. However, should current trends remain unchanged, FY20 A-train ridership may be reduced by approximately 49 percent and Connect ridership may be reduced by approximately 34 percent when compared against FY19.

Exhibits

Exhibit 1: FY19 & FY20 Total Monthly Ridership – Rail
Exhibit 2: FY19 & FY20 Total Monthly Ridership – Bus
Exhibit 3: FY19 & FY20 Total Monthly Ridership – Access
Exhibit 4: FY19 & FY20 Total Monthly Ridership – On-Demand
Exhibit 5: A-train Ridership and Service Level Change History

Submitted By: _____
Tim Palermo, Planning & Data Analytics Manager

Approval: _____
Kristina Holcomb, Deputy CEO

FY19/FY20 Total Monthly Ridership – A-train

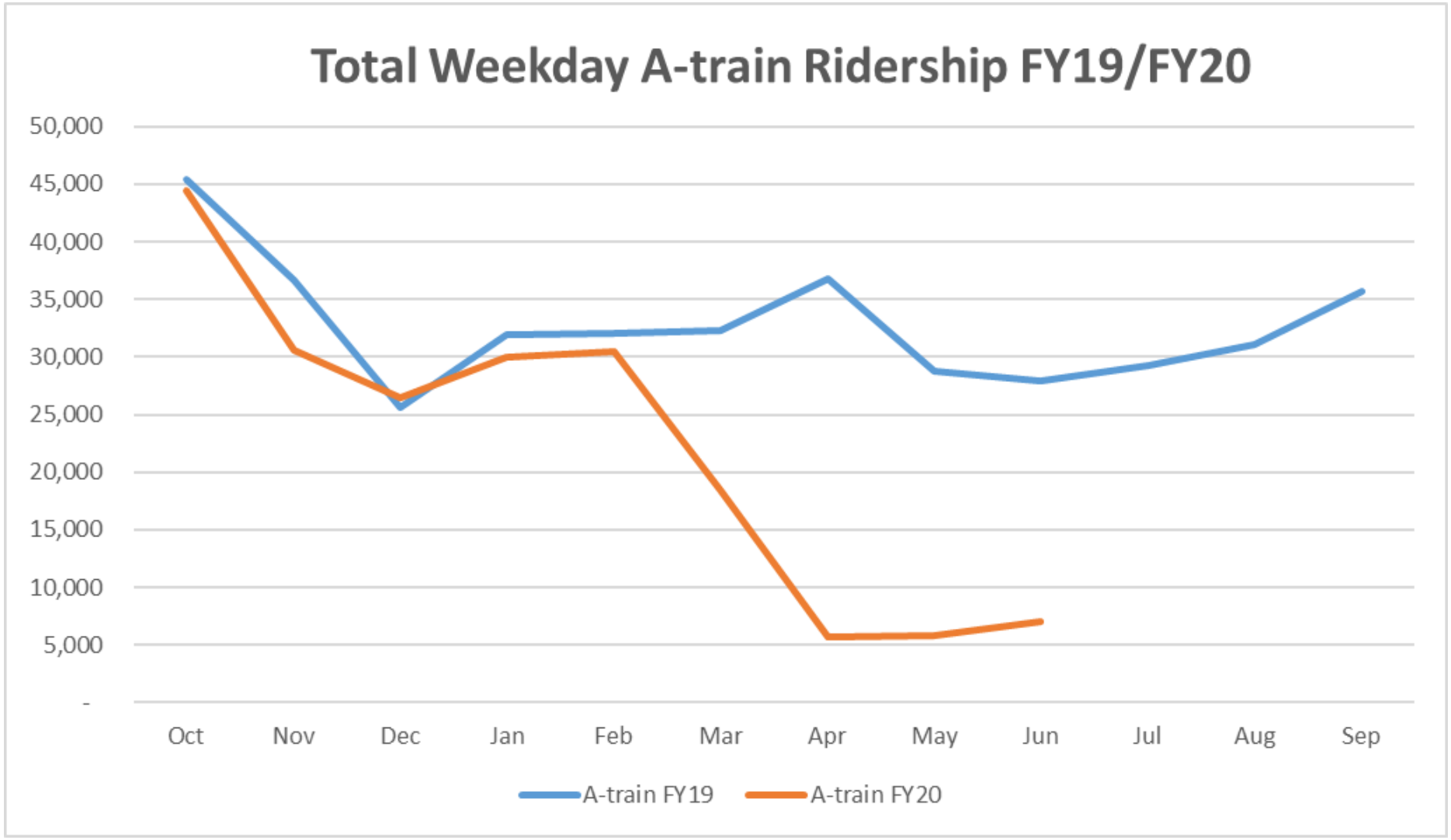

FY19/FY20 Total Monthly Ridership – Bus

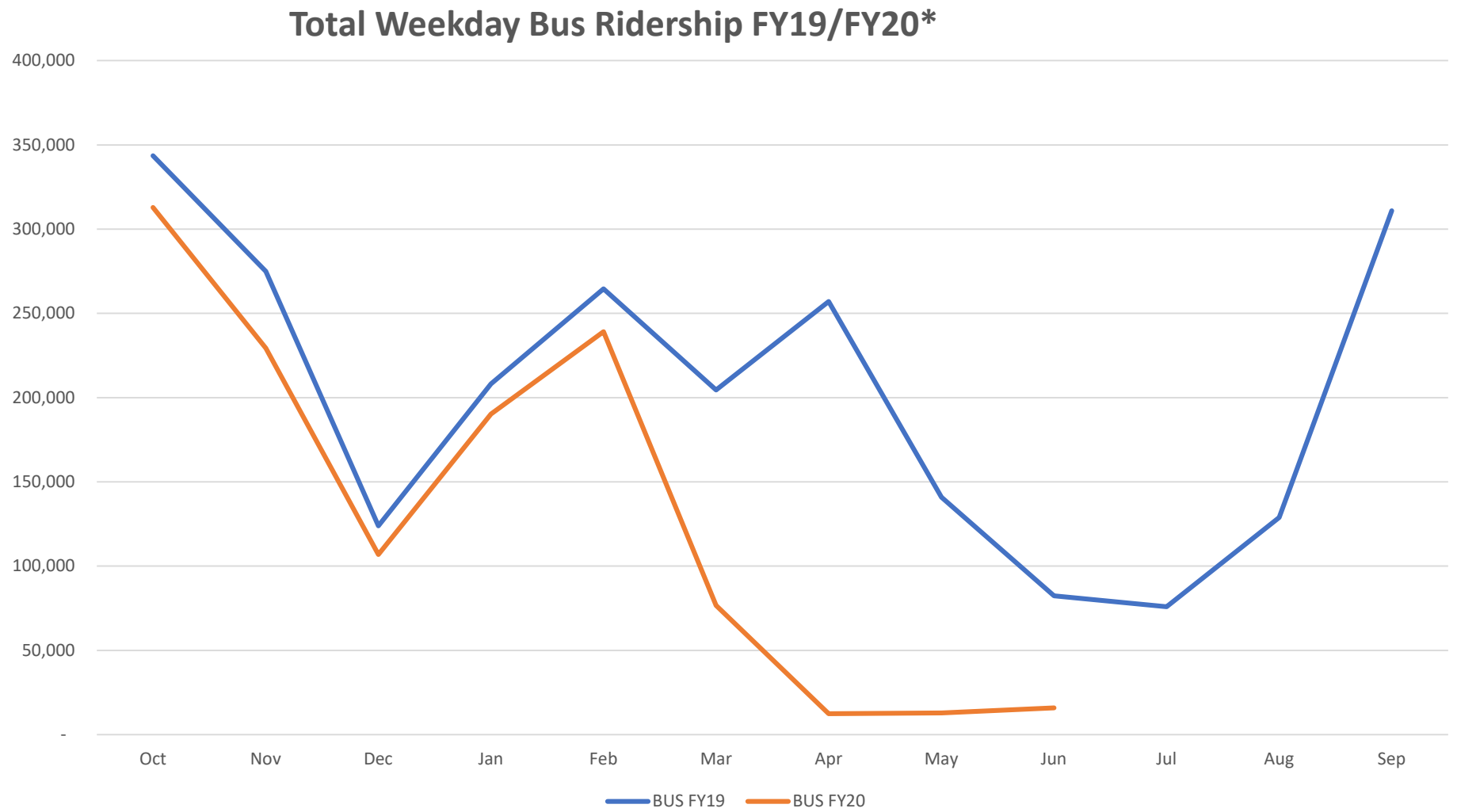

*UNT, NCTC, Denton, Lewisville, and Highland Village Connect Service.

FY19/FY20 Total Monthly Ridership – Access

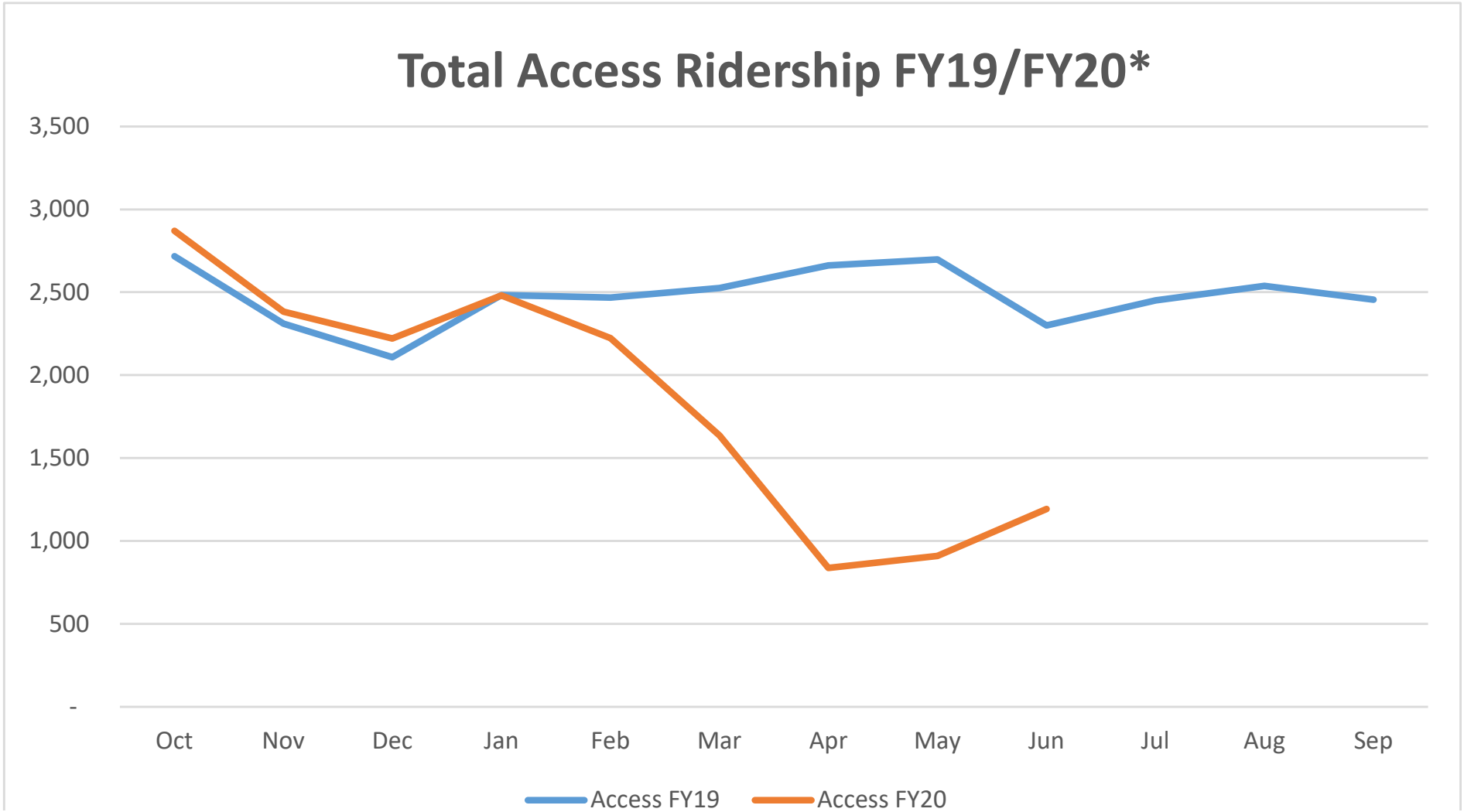

*ADA & Non-ADA Service in Denton, Lewisville & Highland Village

FY19/FY20 Total Monthly Ridership – On-Demand

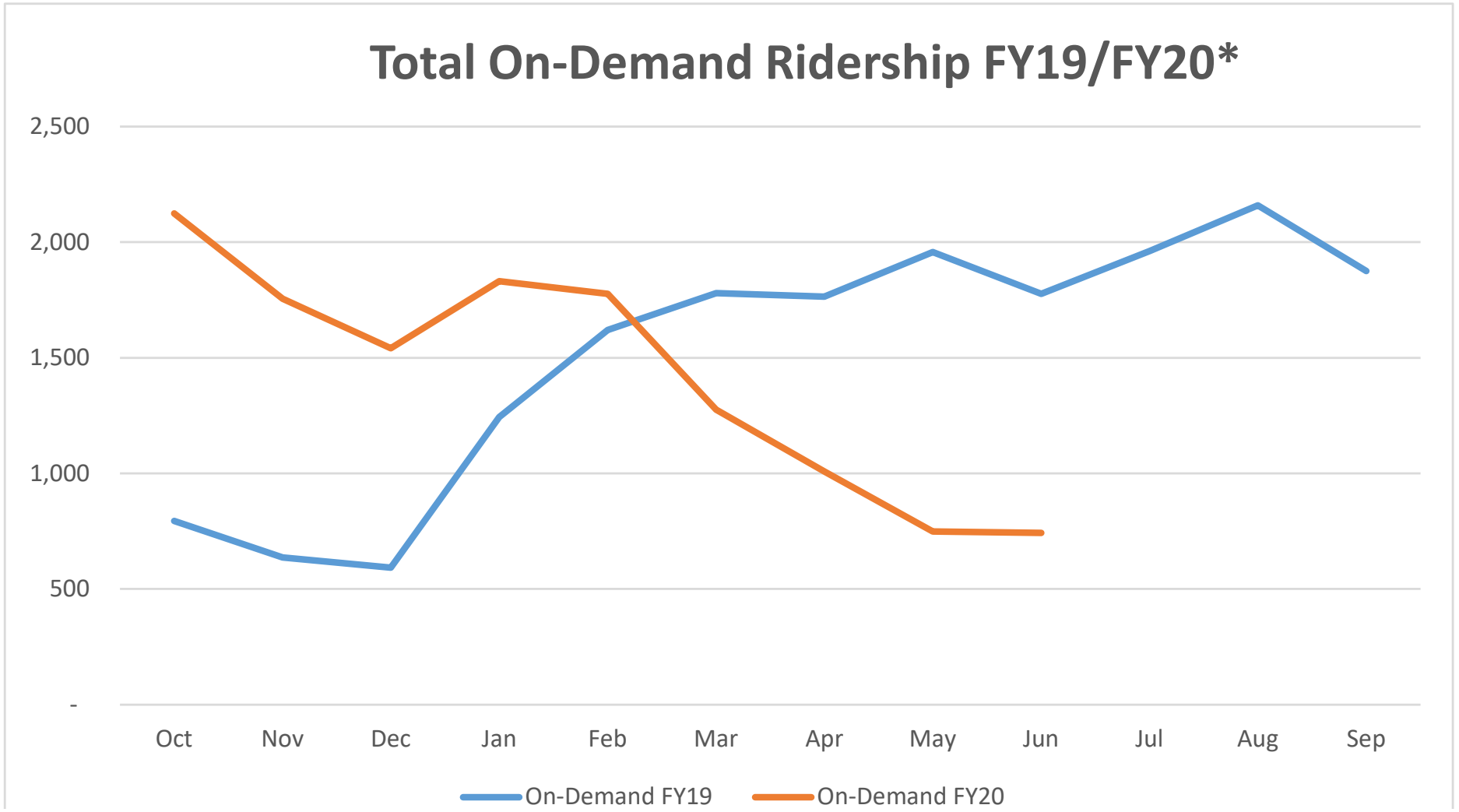

*Frisco, Collin County Transit and Zoned Service In Denton & Highland Village

A-train - Total Annual Ridership FY11-FY20

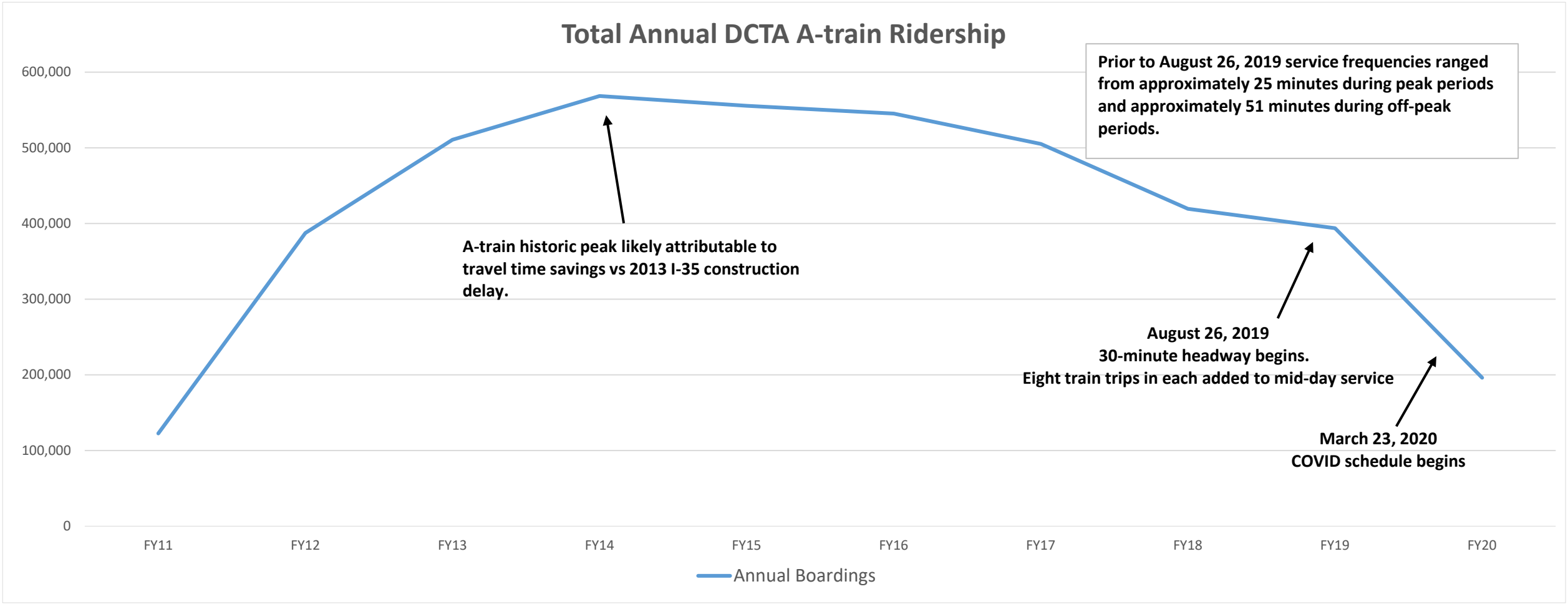

A-train Daily Passenger Counts February 2020 – July 15, 2020



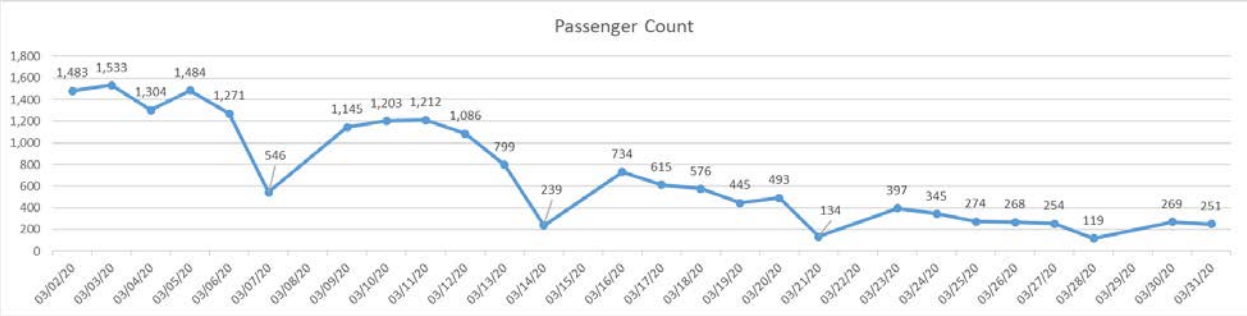



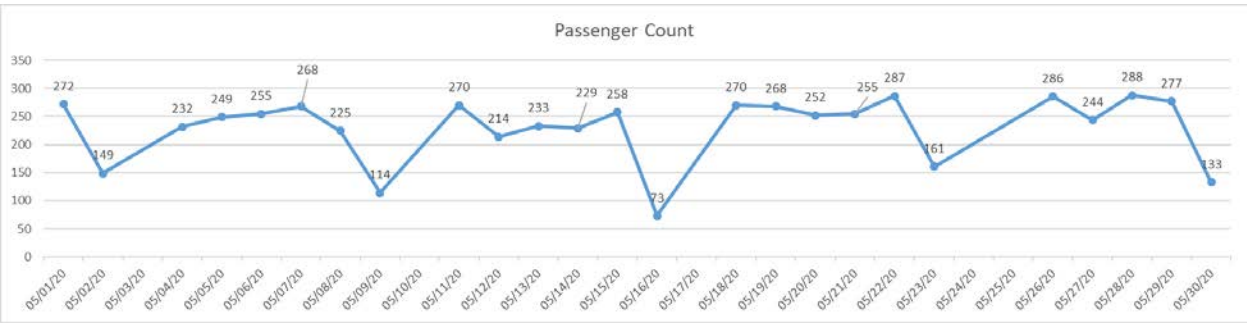

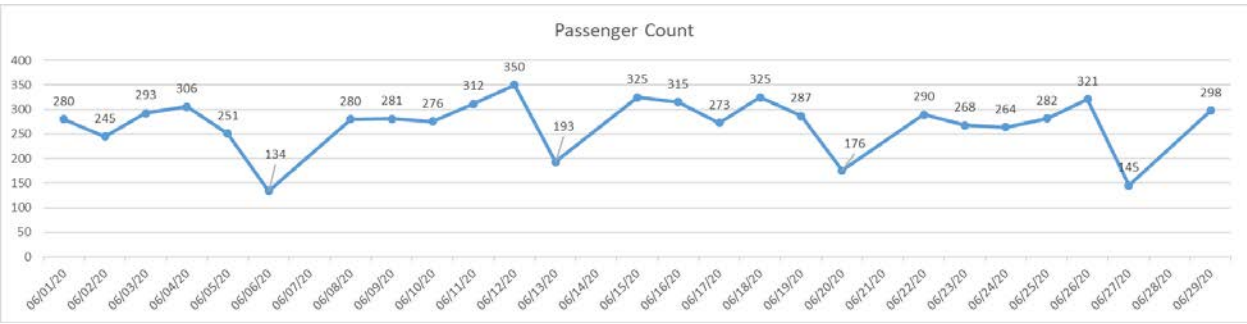



Board of Directors Memo July 23, 2020

SUBJECT: Contracted Service Agreements Monthly Progress Report

Background

At the April 2020 board meeting, the DCTA Board of Directors approved a one-month extension of both the North Central Texas College (NCTC) and City of McKinney contracted service agreements. With the new expiration date of July 31, 2020, DCTA staff has been working diligently to coordinate new contract terms in line with the agency's Cost Allocation Model and Administrative Fee Policy.

Additional contract service updates have been added to this memo to facilitate communication with the Board.

Financial Impact

The new contract terms and all related fees will be reflected in any new agreements and incorporated into the budget as needed.

City of McKinney Update

Completed Steps

- 4/24 – Communicated with City of McKinney staff regarding Board direction on 2-month extension of current ILA.
- 4/29 – Communicated with City of McKinney staff regarding Board direction related to pricing implications and scheduling an executive-level meeting.
- 5/6 – City of McKinney ILA 2-month extension fully executed.
- 5/11 – CEO communication with City of McKinney City Manager regarding executive meeting on 5/21.
- 5/21 – Initial discussion with City of McKinney leadership to walk through the Cost Allocation Model and impacts to rate for service.
- 6/5 – City of McKinney staff and DCTA staff met to prepare for the 6/17 MUTD Board meeting.
- 6/17 – MUTD Board of Directors held a meeting at which they considered and approved a proposed fourth amendment to the City of McKinney/DCTA ILA through December 31, 2020. In addition, they authorized city staff to issue an RFQ for transit services contingent upon the DCTA Board of Directors approval of the fourth Amended ILA and extension.
- 6/19 – Held follow-up meeting with City of McKinney leadership to discuss the outcome of the 6/17 MUTD Board meeting and direction provided.
- 6/25 – DCTA Board considered and approved an extension of the ILA through December 31, 2020.
- 7/14 – Held follow-up meeting with City of McKinney staff and DCTA leadership to discuss parameters of new interlocal agreement and determine what programmatic changes are necessary to align with MUTD Board direction. Staff will be working to implement a flat rate fare and identify service optimization alternatives.
- Continuous communications with City of McKinney staff on ridership data and COVID-19 response/recovery.

Next Steps

- Provide monthly updates to the DCTA Board of Directors.
- Received MUTD signature on Fourth Amended ILA; fully executed agreement attached as Exhibit 1.
- Continue to work with the City and the MUTD Board on optimizing services.

City of Frisco Update

Completed Steps

- 5/20 – Initial discussion with City of Frisco leadership to walk through the Cost Allocation Model and impacts to rate for services.
- 7/13 – The original 6/29 follow-up meeting was rescheduled to 7/13. DCTA leadership and Frisco staff met to discuss possible service changes to reduce overall costs. As many other cities are doing, Frisco is looking to cut costs in their budget due to the economic downturn that has resulted from the COVID-19 pandemic.
- Continuous communications with City of Frisco staff on ridership data and COVID-19 response/recovery.

Next Steps

- Work with City staff to assist them in finalizing council agenda backup in preparation for their August 4 City Council meeting.
- City staff will seek direction on the budget and proposed reductions in service at the August 4 City Council work session.
- Brief the DCTA Board about the direction provided by the Frisco City Council and new service parameters at the August board meeting.
- Coordinate terms of new interlocal agreement and bring forward to DCTA Board for consideration.
- Provide monthly updates to the DCTA Board of Directors.

City of Coppell Update

Completed Steps

- 4/13 – Contacted City of Coppell staff to begin discussions on whether the City is interested in continuing service after the pilot officially ends on Sept. 30, 2020.
- 5/15 – Staff followed up to check on status of Coppell internal discussions and share recent operational transitions.
- 6/9 – Coppell City Council held a discussion on this item on June 9 and indicated an interest in continuing service following the end of the pilot program, and to negotiate a new ILA with DCTA.

Next Steps

- Provide update to the Board of Directors at the July Board meeting and seek direction on continuation of service and negotiating a new ILA. Please refer to Regular Agenda Item 6 for details.
- Schedule meeting with City of Coppell staff to further discuss terms of ILA and new budgetary impacts.
- Provide monthly updates to the DCTA Board of Directors and continue to communicate with Coppell on any developments.

North Central Texas College Update

Completed Steps

- 4/30 – Communicated with NCTC staff regarding Board direction on one-month extension of current contract and sent updated documentation for signature
- 5/3 – Requested meeting with NCTC leadership to walk through the Cost Allocation Model and Administrative Fee Policy to discuss future agreement terms

- 5/4 – NCTC board meeting where discussion regarding contract extension and 5% fee increase was discussed; DCTA sent request to meet with NCTC leadership re: Cost Allocation Model and Administrative Fee Policy
- 5/18 – Followed up with NCTC leadership to fully execute contract and schedule meeting for further discussion of Cost Allocation Model and Administrative Fee Policy
- 5/19 – NCTC contract amendment fully executed
- 5/21 – Followed up with NCTC leadership to schedule meeting for further discussion of Cost Allocation Model and Administrative Fee Policy
- 6/11 – Followed up with NCTC leadership to schedule meeting for further discussion of Cost Allocation Model and Administrative Fee Policy
- 7/7 – Met with NCTC leadership to discuss their service contract. Due to a reduction in funding, a decrease in enrollment, and moving the majority of their courses online for the Fall semester, NCTC requested that we let the contract expire on July 31. This means that DCTA will no longer be providing service to NCTC until a new contract is developed.

Next Steps

- Meet with NCTC leadership in early September to (1) determine spring enrollment and (2) various service modes that might be more cost effective.
- Coordinate terms of new agreement, if needed.
- Provided a new agreement is executed, launch new services in line with the January 2021 service changes.

Exhibit 1: City of McKinney/DCTA Fourth Amended Interlocal Agreement Fully Executed

Submitted By: _____
Lindsey Baker, Director of Government Affairs

Approved By: _____
Nicole Recker, VP of Mobility Services & Administration

DocuSign Envelope ID: 75151362-9EEA-48A4-8A3A-E1272A70F59F

DOCUMENT CONTROL

Please attach this form to original documents to obtain signatures.

FROM: Akia Pichon **DEPT:** CDBG **EXT:** 3497 **DATE:** 06/30/2020

NAME OF DOCUMENT: 4th Amended ILA with DCTA for Transit Service

VENDOR: **Contact #:**

TYPE OF DOCUMENT: (check one)

- ☐ Contract/Agreement
- ☑ Contract Amendment/Additional Srvs.
- ☐ Contract Change Order
- ☐ Lien/Lien Release

Start Date:

- ☐ Grant
- ☐ Administrative Order
- ☐ Easement

End Date:

- ☐ Facility Agreement
- ☐ Other_____
- ☐ Grant

Number of Documents Attached	1	
Date and Amount Approved by City Council ***(if applicable)***	MUTD approved 06/15	
Agenda # /Resolution Number ***(if applicable)***	#20-0514	
Project Name and Project Number ***(required for all AI, CO, DR, FA, FC, FI, GR, LI, PK, ST, TR, WA, WW projects)***		
Account No. ***(if applicable)***	073-1273-463.85-16	
Contract/Grant Value ***(if applicable)***		

ROUTING

Please sign the attached documents, initial, and date form then forward to the next person checked for signature (must be routed in the order shown below):

Check box for required signatures		INITIALS	DATE
☒	**Executive Director** ***(Required for all documents)***	JT	7/2/2020
☒	**Purchasing Manager** ***(Required if goods or services are purchased)***	LL	7/2/2020
☒	**CFO/Finance Director** ***(Required for all revenue and expenses)***		7/9/2020
☐	**IT Director** ***(Required if IT related)***		
☐	**Grant Administrator** ***(Required for ALL grant related documents)***		
SUBMIT TO CITY ADMINISTRATION FOR THE FOLLOWING SIGNATURES			
☑	**City Attorney** ☐ **Review** ☑ **Sign**	MH	/9/2020
☐	**Mayor**		
☑	**City Manager / Assistant City Manager** ***(Required for all contracts)***	PGG	7/10/2020
☐	**Notary**		
☐	**City Secretary** ☐ **Copy Only** ☐ **Sign**		

RETURN *ALL* COPIES BY (date) ASAP

RETURN *ALL* COPIES TO Akia Pichon

Send original document (with all required signatures) and this completed form to the City Secretary. Date received by City Secretary: _____

STATE OF TEXAS §
§ **FOURTH AMENDMENT TO INTERLOCAL**
§ **COOPERATION AGREEMENT**
COUNTY OF COLLIN §

This Fourth Amendment to Interlocal Cooperation Agreement is made and entered into by and between City of McKinney, Texas ("McKinney") and Denton County Transportation Authority ("DCTA") (each a "Party" and collectively the "Parties"), acting by and through their authorized representatives.

WHEREAS, the Parties previously entered into that certain Interlocal Cooperation Agreement which was effective on June 1, 2017 (the "Agreement"); and

WHEREAS, the Parties entered into the First Amendment to the Agreement dated October 26, 2017; and

WHEREAS, the Parties entered into the Second Amendment to the Agreement dated February 13, 2018; and

WHEREAS, the Parties entered into the Third Amendment to the Agreement dated May 05, 2020; and

WHEREAS, the Parties desire to enter into this Fourth Amendment to the Agreement to extend the Term of the Agreement for one hundred and fifty (150) days through December 31, 2020, and

WHEREAS, the Parties are authorized to enter into this Fourth Amendment to the Agreement pursuant to the Interlocal Cooperation Act (the "Act"), Chapter 791, Texas Government Code; and

WHEREAS, DCTA and McKinney are units of local government that have the statutory authority under the Act to perform the services set forth in the Agreement and this Fourth Amendment; and

WHEREAS, pursuant to Chapter 460 of the Texas Transportation Code, McKinney is authorized to enter into this Agreement with DCTA to provide the requested transit services; and

WHEREAS, each Party will make any required payments for services from current revenues available to such Party; and

WHEREAS, the Parties agree to amend the Agreement as set forth herein;

NOW THEREFORE, in consideration of the mutual promises contained herein and other valuable consideration, the receipt and sufficiency of which are hereby acknowledged, the Parties agree as follows:

1. That Article II, **Term**, is hereby amended to read as follows:

"2.1 The Term of the Agreement shall be extended through December 31, 2020, unless sooner terminated as provided herein."

2. That Exhibit A, **Scope of Services for Transit Services**, **Scope of Services, Taxi Services,** is hereby amended as follows:

Subsection beginning with "Debit Card Issue/Reloading." is deleted in its entirety and replaced with the following section:

"Taxi Fares. The Parties acknowledge and agree that McKinney has the authority to establish fare formulas and/or rates based upon vehicle, origin, and destination, as determined by the McKinney Urban Transit District ("MUTD"). Such formulas and/or rates shall be subject to change by MUTD during the term of this Agreement . Any such changes shall become effective upon adoption by MUTD unless otherwise stated. McKinney and DCTA agree to work together to ensure that all such changes are effectuated by all relevant parties and/or third-parties immediately upon passage or effective date. The Parties agree to amend this Agreement to reflect such changes should either party request such amendment."

The following subsection is added to the end of the section entitled: **Scope of Services for Transit Services, Scope of Services, Taxi Services:**

"Operational Service Model. The Parties acknowledge and understand that McKinney has the authority to revise taxi operational service requirements within the City of McKinney, as determined by the MUTD and/or the McKinney City Council. Such operational service requirements are subject to change by MUTD and/or the McKinney City Council. Any such changes shall become effective upon adoption by MUTD and/or the City Council. McKinney and DCTA agree to work together to ensure that any such changes are effectuated by all relevant parties and/or third-parties immediately upon passage or effective date. The Parties agree to amend this Agreement to reflect such changes should either party request such amendment."

3. That Paragraph 4.1 of Article IV, entitled "**Compensation and Fees**" is hereby amended to read as follows:

"4.1 DCTA shall be compensated as set forth in its Administrative Fee Policy, attached hereto as Exhibit 1.

4. The Agreement shall continue in full force and effect except as amended herein. If any terms or conditions contained in this Fourth Amendment to the Agreement are inconsistent with the Agreement or First, Second, or Third Amendments, the terms and conditions contained in the Fourth Amendment will be controlling.

EXECUTED this 10th day of July, 2020.

City of McKinney, Texas

DocuSigned by:
Paul G. Grimes
487F6E42C872437...

By: Paul Grimes, City Manager

Approved as to form:

DocuSigned by:
Mark Houser
17085939BB3846D...

By: _____
Mark S. Houser, City Attorney

EXECUTED this 9th day of July, 2020.

Denton County Transportation Authority

By: _____
Raymond Suarez, CEO

DocuSign Envelope ID: 75151362-9EEA-48A4-8A3A-E1272A70F59F

DENTON COUNTY TRANSPORTATION AUTHORITY

Administrative Fee Policy

Section 1: Purpose

The purpose of this policy is to establish guidelines regarding contract service agreements for service provided by DCTA.

Section 2: Policy Statement

DCTA provides public transportation alternatives to improve mobility, air quality, economic development and livability in the areas it serves. DCTA supports utilization of these services through contracts in partnership with Universities, Colleges and with entities outside of the existing member city area but expects reasonable compensation.

Section 3: Administration

Contracts for service delivered to local Universities and Colleges, within member cities must recover a minimum of 75% of total operating and capital costs. Contracts for services delivered outside member cities must recover 100% of total operating and capital costs.

An overhead percentage shall be calculated annually based on DCTA's cost allocation model to determine the percentage of allocated, indirect costs in proportion to direct costs. A three percent (3%) fee shall be added to this overhead percentage for all contract services delivered outside member cities. This calculated overhead percentage, plus 3%, shall be used as the Administrative Fee added to direct costs. In no case shall the Administrative Fee be less than 60% without prior approval of the DCTA Board of Directors.

The President/CEO or designee is authorized to implement this policy and to issue more detailed procedures to facilitate implementation of the policy as needed. All agreements developed under this policy and any proposed deviations from this policy will be brought to the Board for prior review and approval.

RECEIVED

STATE OF TEXAS §
§
COUNTY OF COLLIN §

INTERLOCAL COOPERATION A i600R ETARY

This Interlocal Cooperation Agreement (the "Agreement") is made and entered into by and between Denton County Transportation Authority ("DCTA") and the City of McKinney, Texas ("McKinney';) (each a "Party" and collectively the "Parties"), acting by and through their authorized representatives.

RECITALS

WHEREAS, McKinney is a home-rule municipality and local governmental entity located within the State of Texas and DCTA is a coordinated county transportation authority created under Chapter 460 of the Texas Transportation Code; and

WHEREAS, McKinney desires to have DCTA provide limited public transportation services to eligible passengers as established by the McKinney Urban Transit District Board ("Board") to the McKinney Urbanized Area ("MUA") including the cities of McKinney, Celina, Princeton, Prosper, Melissa and Lowry Crossing; and

WHEREAS, the Parties are authorized to enter into this Agreement pursuant to the Inter-local Cooperation Act ("Act"), Chapter 791, Texas Government Code; and

WHEREAS, DCTA and McKinney are units of local government that have the statutory authority under the Act to perform the services set forth in this Agreement; and

WHEREAS, pursuant to Chapter 460 of the Texas Transp01iation Code, DCTA is authorized to enter into this Agreement with McKinney to provide the requested transit services as set forth in Exhibit "A";

NOW THEREFORE, for and in consideration of the promises and the mutual covenants set forth in this Agreement, and other valuable consideration, the receipt and sufficiency of which is hereby acknowledged, the Parties agree as follows:

Article I
Purpose of Trips; Eligibility

1.1 The purpose of this Agreement is to provide for the administration and operation of transit services program for eligible passengers as defined by the policies of the Board to destinations located within Collin County municipalities and other destinations as may be defined in the future by the MUTD Board (the "Transit Services"). DCTA shall deliver or cause to be delivered through third-parties, transportation to eligible passengers through the Transit Services as defined in Exhibit "A" of this Agreement.

Article II
Term

2.1 The initial term of this Agreement shall begin on June 1, 2017, and continue for a period of one year, unless sooner terminated as provided herein (the "Initial Term"). After the Initial Term, this Agreement shall automatically renew for successive one year terms upon the mutual agreement of both Parties (each a "Renewal Tetm'\ The Parties shall effectuate this extension in writing signed by the Parties.

2.2 Either Party may terminate this Agreement for any reason whatsoever, with or without cause, by providing the other Party with ninety (90) days prior written notice to te1minate.

Article III
Services

3.1 DCTA shall provide the Transit Services as set fotih in Exhibit "A".

3.2 Compliance with Americans with Disabilities Act and Other Laws. DCTA acknowledges and understands that it is responsible for complying with, and agrees to comply with, the requirements of the Americans with Disabilities Act, as amended, in providing the Transit Services. In addition, DCTA acknowledges and understands that it is responsible for complying with, and agrees to comply with, all other federal, state and local laws, statutes, ordinances, regulations and policies, as they exist now or may be amended in the future, applicable to DCTA and the Transit Services provided under this Agreement. DCTA shall ensure that its officers, employees, agents, contractors and other parties performing services for or on behalf of DCTA comply with all applicable laws, statutes, ordinances, regulations and policies.

3.3 Licensure. All vehicles providing Transit Services shall be operated by an operator duly licensed by the State of Texas and in current possession of said license to operate vehicles of the type and size required by this Agreement. DCTA shall ensure that all persons operating vehicles designed to transport sixteen (16) or more passengers (including the driver) have valid commercial drivers' licenses, and shall further ensure compliance with rules for employees with commercial driver's licenses as specified in 49 CFR Part 382, as amended.

Article IV
Compensation and Fees

DCTA shall be compensated as set forth in Exhibit "A".

Article V
Insurance

DCTA shall, at its own expense, procure, maintain and keep in full force and effect the types and amounts of insurance, or the self-insurance equivalent, specified in attached Exhibit "B" and incorporated herein for all purposes, during the Initial Term and any Renewal Term. DCTA shall not commence work under this Agreement until DCTA has obtained all the insurance

required under this Agreement, nor shall DCTA allow any subcontractor to commence work on its own subcontract until all similar insurance of the subcontractor has been obtained and approved. DCTA shall comply with all other requirements set forth in Exhibit "B".

Article VI
Liability

To the fullest extent permitted by law, DCTA shall be fully and solely responsible and liable for its own negligent acts and omissions, including those of its officers, agents, representatives, employees or any other third-parties for whom DCTA is legally responsible, and for any and all damage to its vehicles, equipment and other property. McKinney shall have no such responsibility or liability to DCTA or its said officers, agents, representatives, employees or other persons to whom DCTA is legally responsible. The provisions of this Article are solely for the benefit of the Parties and are not intended to create or grant any rights, contractual or otherwise, to any other person or entity.

Article VII
Miscellaneous

7.1 Entire Agreement. This Agreement constitutes the sole and only agreement between the Parties and supersedes any prior understandings written or oral agreements between the Parties with respect to this subject matter.

7.2 Assignment. This Agreement may not be assigned by either Party without the prior written consent of the other Party.

7.3 Successors and Assigns. Subject to the provisions regarding assignment, this Agreement shall be binding on and inure to the benefit of the Parties and their respective legal representatives, successors and permitted assigns.

7.4 Governing Law. The laws of the State of Texas shall govern this Agreement; and venue for any action concerning this Agreement shall exclusively be in the State District Court of Denton County, Texas. The Parties agree to submit to the personal and subject matter jurisdiction of said court.

7.5 No Waiver of Immunity. The Parties acknowledge that neither Party is an agent, servant, or employee of the other Party, and each Party agrees it is responsible for its own individual negligent acts or omissions or other tortious conduct, as well as such acts and deeds of its contractors, agents, representatives, and employees, during the performance of this Agreement without waiving any governmental immunity available to the Parties under Texas law and other applicable law, and without waiving any available defenses under Texas law and other applicable law. Further, in the execution and performance of this Agreement, the Parties do not waive, and neither Party shall be deemed to have waived, any other immunity or defense that would otherwise be available to each Party as a local governmental entity and/or political subdivision of the State of Texas.

7.6 Amendments. This Agreement may be amended by the mutual written agreement of the Paiiies.

7.7 Severability. In the event any one or more of the provisions contained in this Agreement shall for any reason be held to be invalid, illegal, or unenforceable in any respect, such invalidity, illegality or unenforceability shall not affect any other provisions, and the Agreement shall be construed as if such invalid, illegal; or unenforceable provision had never been contained in it.

7.8 Notice. Any notice required or permitted to be delivered hereunder may be sent by first class mail, overnight courier or by confirmed telefax or facsimile to the address specified below, or to such other Party or address as either Party may designate in writing, and shall be deemed received three (3) days after delivery set forth herein:

If intended for DCTA:	With Copy to:
James C. Cline, Jr., P.E. President OCTA 1955 Lakeway Drive, Suite 260 Lewisville, Texas 75057	Peter G. Smith Nichols, Jackson, Dillard, Hager & Smith, L.L.P. 1800 Ross Tower 500 N01ih Akard Dallas, Texas 75201

If intended for McKinney:	With Copy to:
Paul Grimes City Manager City of McKinney, Texas 222 North Tennessee Street McKinney, Texas 75069	Mark S. Houser City Attorney City of McKinney, Texas 222 N01ih Tennessee Street McKinney, Texas 75069

7.9 Counterparts. This Agreement may be executed by the Parties hereto in separate counterparts, each of which when so executed and delivered shall be an original, but all such counterparts shall together constitute one and the same instrument. Each counterpati may consist of any number of copies hereof each signed by less than all, but together signed by all of the Parties hereto.

7.10 Recitals. The recitals to this Agreement are incorporated herein and made a pati hereof for all purposes.

7.11 Authorization. Each Party represents that it has full capacity and authority to grant all rights and assume all obligations that are granted and assumed under this Agreement.

7.12 Survival of Covenants. Any of the representations, warranties, covenants, and obligations of the Parties, as well as any rights and benefits of the Parties, pertaining to a period of time following the termination of this Agreement shall survive termination hereof.

7.13 Approval of Parties. Whenever this Agreement requires or permits the approval or consent to be given by a Party, the Parties agree that such approval or consent shall not be umeasonably withheld, conditioned or delayed.

7.14 No Third-Paiiy Beneficiary. Nothing in this Agreement shall be construed as creating or giving rise to any rights of third-paiiies or any persons other than the Parties hereto.

7.15 Third-Paiiy Subcontractors. DCTA has the right to contract with a third-party or other contractors to perform all or any part of the Transit Services under this Agreement. The terms and conditions of this Agreement shall be binding on such third-party or contractors.

7.16 Recordkeeping and Right to Inspect Records. Each Party shall have mutual access to, and the right to examine, all books, documents, papers, and other records of the other Paiiy involving transactions relating to this Agreement. Each Party shall have access during normal business hours to all necessary facilities and shall be provided adequate and appropriate work space in order to conduct audits in compliance with the provisions of this Agreement. Each Party shall give the other Party advanced written notice of at least forty-eight (48) business hours of intended audits.

(Signature to Follow)

IN WITNESS WHEREOF, the Patties have executed this Agreement and caused this Agreement to be effective when both Paities have signed it. The date this Agreement is signed by the last Party to sign it (as indicated by the date associated with that Party's signature below) will be deemed the effective date of this Agreement ("Effective Date")..

Denton County Transportation Authority

By: _____
James C. Cline, Jr., P.E., President

Date: 15 May 2017

Approved as to form:

By: _____
Peter G. Smith, General Counsel
(05-11-17/85878)

City of McKinney, Texas

By: _____
Paul Gri[redacted] Manager

Date: 5/15/17

Approved as to form:

By: _____
Mark S. Houser, City Attorney

Exhibit A
Scope of Services for Transit Services

Overall Intent

The intent of this Agreement is for DCTA to provide or cause to be provided transit services for Elderly and Disabled residents through a contract with the City of McKinney acting on behalf of the McKinney Urban Transit District. This service will include a taxi voucher program and the provision of DCTA operated vehicles to address specific mobility needs within established hours and days of service. DCTA will provide supporting service to facilitate the implementation of the program and program compliance. This exhibit establishes a framework for the initiation of service. Changes required to meet the needs of the program may be made by mutual written agreement of the DCTA President and the City Manager or their designees.

Program Management

Overall Program Management. DCTA will be responsible for the overall management of the program and the successful delivery of the services within this scope of services.

Budget Management. DCTA will track service costs of each participating municipality to ensure the budgeted funds will be sustainable over the allotted period. Service cost reporting and all requested backup shall be made available to the City on a monthly basis. Service cost reporting for each monthly period, for all participating members of the MUTD, shall be submitted with the monthly DCTA invoice. **The initial budget is $350,000 for the first twelve-month period.**

Eligibility Certification. DCTA will certify the eligibility of qualified residents based on the current policy established by the McKinney Urban Transit District. Initial certification will be conducted at a minimum of four locations within the service area prior to the launch of service. After service implementation, certification will be conducted via mail, web, email, phone, or in person at DCTA offices. Additional on-site eligibility opportunities will be coordinated with City of McKinney staff. DCTA will utilize its appeal process for any appeals submitted by potential passengers under this program.

Hardship Requests. A passenger wishing to claim a specific hardship will be referred to City of McKinney staff (or other designated entity) for review. Based on this recommendation, DCTA will modify the match requirement in accordance with City of McKinney directives.

Compliance Reporting. DCTA will support audit, TxDOT, FTA, and National Transit Database reporting and compliance requirements.

Customer Service. DCTA will provide a phone number and electronic access for the receipt of customer requests in concert with the contract provider.

Support to City of McKinney and McKinney Urban Transit District. DCTA will participate in reasonable meetings of the City of McKinney, the McKinney Urban Transit District, and regulatory agencies in order to ensure the success of the program.

Taxi Services. DCTA will contract with a third-paiiy contractor to implement a taxi voucher program. This program will consis.t of the following elements:

- Debit Card Issue/Reloading. Issue, reload, replace lost cards (fee charged), and report all values loaded on the card. The initial guidance is to provide a 3:1 match (eligible passenger contributing $25 will receive $100 value on their debit card) with a maximum balance at any time of $400 and a maximum loading of $400 in any month. DCTA will work closely with City staff to monitor the allowable load rate to ensure budget limitations are sustained.

- Trip Dispatch. The third-party contractor will provide dispatch services during operating hours.

- Taxi Service. The third-party contractor will send clean and safe vehicles to the requested locations within promised time windows. This will include mobility device accessible vehicles if requested. Taxi service will be provided from 6 a.m. - 6 p.m., Monday to Friday. Passengers will be picked up on a return trip, even if after 6 p.m.

- Reporting. The third-party contractor will provide reports on debit card loading/balances, trip reports, and additional information necessary for compliance reporting. Administrative p01iion of taxi service costs will be noted separately.

DCTA Operated Vehicles. DCTA will initially provide demand response vehicles based on specific mobility needs of passengers. This program will consist of the following elements:

- Fare. Passengers will pay a fare established by the City for their trip on the vehicle based on origin and destination.

- Dispatch. Trips will be dispatched through DCTA's call center between the hours of 6 a.m. - 6 p.m., Monday to Friday.

- Reporting. DCTA will provide reports on trip length, vehicle hours of operations, and origin/destination.

- Vehicles. During the initial contract period, DCTA will utilize existing DCTA fleet to provide these trips. Based on demand and utilization, capital needs will be included in future contract renewal discussions.

- Vehicle Operating Hour Definition. Time the vehicle is dedicated to service including travel time to the pickup location, trip completion, and return to service.

Compensation

Program Management. Program management will be compensated through the 5% DCTA administrative fee.

Taxi Services. Invoicing for taxi services will have three components. The first is as the matching funds are loaded on to the debit card. The second is the program fee from the third party taxi provider. This is based on 15% of the fares for trips actually completed by the certified passenger during that invoice period. The third is DCTA's 5% administrative fee which will be calculated based on the sum of the fares and the program fees during the invoice period.

OCTA Operated Vehicles. Invoicing for DCTA operated vehicles will be at a rate of $50.39 per service hour. This includes $47.99 for bus operations and $2.40 for the 5% administrative fee. Fuel will be invoiced based on actual usage and cost without an administrative fee.

Invoicing. DCTA will invoice the City of McKinney monthly for the provision of transit services as defined above.

Exhibit B
Insurance Requirements

I. GENERAL INSURANCE REQUIREMENTS

A. All policies shall name the City of McKinney, Texas ("McKinney") its officers, agents, representatives and employees as additional insureds as to all applicable coverages with the exception of worker's compensation insurance.

B. All policies shall be written on an "occurrence" basis. Any policy submitted shall not be subject to limitations, conditions or restrictions deemed inconsistent with the intent of the insurance requirements to be fulfilled under this Agreement. McKinney's decision(s) thereon shall be final.

C. Such policies shall provide for a waiver of subrogation against McKinney for injuries, including death, property damage or any other loss to the extent the same is covered by the proceeds of the insurance.

II. INSURANCE COMPANY QUALIFICATION. All insurance companies providing the required insurance shall be authorized to transact business in the State of Texas, and shall have a minimum rating of "A" by A.M. Best's Key Rating Guide, or other equivalent rating service(s). Insurance coverage may also be provided by the Texas Municipal League Intergovernmental Risk Pool.

III. CERTIFICATE OF INSURANCE; ENDORSEMENTS. A Certificate of Insurance and all applicable endorsement(s) evidencing the required insurance shall be submitted prior to the Effective Date of this Agreement. If the Agreement is renewed by McKinney, a Certificate of Insurance and all applicable endorsement(s) shall also be provided to McKinney prior to the date the Agreement is renewed.

IV. INSURANCE CHECKLIST. "X" means that the following coverage is required for this Agreement:

Exhibit B
Insurance Requirements

	Coverage Required	Limits
	1. Worker's Compensation & Employer's Liability	• Statutory Limits of the State of Texas
_X_	2. General Liability	• Minimum $1,000,000.00 each occurrence; • Minimum $2,000,000.00 111 the aggregate.
_X_	3. Business Automobile Liability covering owned, hired and non-owned vehicles	• Minimum $1,000,000.00 each occurrence;
	4. Professional Liability	• Minimum $1,000,000.00 each claim; • Minimum $ 2,000,000.00 in the aggregate.
_X_	5. In Lieu of Workers Compensation & Employer's Liability for DCTA subcontractor	• Non-subscriber CSL $1,000,000

__X_ 6. McKinney and its officers, agents, representatives and employees named as additional insured on General Liability Policy, as provided above. This coverage is primary to all other coverage McKinney may possess.

__X_ 7. General Liability Insurance provides for a Waiver of Subrogation in favor of McKinney and its officers, agents, representatives and employees for injuries, including death, property damage, or any other loss to the extent that same is covered by the proceeds of the insurance.

__X_ 8. For each policy, at least thirty (30) days prior to the expiration, cancellation, non- renewal or any other material change in coverage, a notice thereof shall be given to McKinney by certified mail. The words "endeavor to" and "but failure" (to end of sentence) are to be eliminated from the Notice of Cancellation provision on standard ACORD ce1iificates.

__X_ 9. Each insurance company has a minimum rating of "A" by A.M. Best's Key Rating Guide, or other equivalent rating service(s), or is provided by the Texas Municipal League Intergovernmental Risk Pool

__X_ 10. The Certificate of Insurance must state the project title.

11. Other Insurance Requirements (State Below):

DocuSign Envelope ID: 75151362-9EEA-48A4-8A3A-E1272A70F59F

DCTA DENTON COUNTY TRANSPORTATION AUTHORITY

February 13, 2018

Anthony V. Cao, MPA
Transit Administrator
City of McKinney, Housing and Community Development
PO Box 517
McKinney, TX 75070

Re: Interlocal Cooperation Agreement for Transit Services

Mr. Cao:

Enclosed is one fully executed original amendment to the above referenced agreement.

Please call or email me if you have any questions.

Sincerely,

Athena Forrester, CPPO, CPPB
AVP of· rocurement

DocuSign SECURED

Certificate Of Completion

Envelope Id: 751513629EEA48A48A3AE1272A70F59F
Subject: DCTA_ILA Amendment #4
Source Envelope:
Document Pages: 46
Certificate Pages: 6
AutoNav: Enabled
EnvelopeId Stamping: Enabled
Time Zone: (UTC-06:00) Central Time (US & Canada)

Signatures: 2
Initials: 5

Status: Completed

Envelope Originator:
Rosanne Lemus
222 N Tennessee St
McKinney, TX 75069
rlemus@mckinneytexas.org
IP Address: 68.206.67.32

Record Tracking

Status: Original
7/2/2020 8:53:37 AM

Holder: Rosanne Lemus
rlemus@mckinneytexas.org

Location: DocuSign

Security Appliance Status: Connected
Storage Appliance Status: Connected

Pool: StateLocal
Pool: City of McKinney

Location: DocuSign

Signer Events	Signature	Timestamp
Rosanne Lemus rlemus@mckinneytexas.org Contract Administrator City of McKinney Security Level: Email, Account Authentication (None)	 Signature Adoption: Uploaded Signature Image Using IP Address: 68.206.67.32	Sent: 7/2/2020 9:58:14 AM Viewed: 7/2/2020 9:58:38 AM Signed: 7/2/2020 9:58:45 AM
Electronic Record and Signature Disclosure: Not Offered via DocuSign		
Lisa Littrell llittrell@mckinneytexas.org Procurement Services Manager City of McKinney Signing Group: Purchasing Approvers Security Level: Email, Account Authentication (None)	 Signature Adoption: Pre-selected Style Using IP Address: 174.197.71.46	Sent: 7/2/2020 9:58:51 AM Viewed: 7/2/2020 10:00:56 AM Signed: 7/2/2020 10:12:32 AM
Electronic Record and Signature Disclosure: Accepted: 4/8/2020 5:26:11 PM ID: 2b03b77f-0d65-44bf-be55-bced63fcec52		
Janay Tieken Jtieken@mckinneytexas.org Security Level: Email, Account Authentication (None)	**Completed** Using IP Address: 50.84.129.124	Sent: 7/2/2020 10:12:36 AM Viewed: 7/2/2020 10:50:58 AM Signed: 7/2/2020 10:52:27 AM
Electronic Record and Signature Disclosure: Accepted: 7/2/2020 10:50:58 AM ID: dbed3e4f-1718-446b-9c41-773ee7a5a406		
Lisa Koslan lkoslan@mckinneytexas.org Accounting Manager City of McKinney Signing Group: CFO/Finance Director Security Level: Email, Account Authentication (None)	 Signature Adoption: Pre-selected Style Using IP Address: 70.142.60.68	Sent: 7/2/2020 10:52:38 AM Resent: 7/8/2020 8:11:02 AM Resent: 7/9/2020 10:02:35 AM Viewed: 7/2/2020 11:04:25 AM Signed: 7/9/2020 11:54:15 AM
Electronic Record and Signature Disclosure: Not Offered via DocuSign		

SECOND AMENDMENT TO INTERLOCAL COOPERATION AGREEMENT BY AND BETWEEN CITY OF McKINNEY, TEXAS AND DENTON COUNTY TRANSPORTATION AUTHORITY FOR LIMITED PUBLIC TRANSPORTATION SERVICES

This Second Amendment to the Interlocal Cooperation Agreement for limited public transportation services ("Second **Amendment**") is entered into by and between the City of McKinney ("**City**") and the Denton County Transportation Authority ("**DCTA**") (collectively the "**Parties**" or "**parties**" or individually referred to as the "**Party**" or "**party**"), and this Second Amendment shall be effective on the date it is executed by all Parties hereto ("**Effective Date**").

RECITALS

WHEREAS, the Parties entered into that certain Interlocal Cooperation Agreement for limited public transportation services for the McKinney Urban Transit District ("**MUTD**") dated May 15, 2017, and thereafter amended the Agreement on September 28, 2017, to provide for the addition of Saturday service (referred to collectively as the "**Agreement**"); and

WHEREAS, pursuant to the Agreement, DCTA agreed to provide limited public transportation services to eligible passengers as established by the McKinney Urban Transit District Board ("**Board**") to the McKinney Urbanized Area ("**MUZA**") whose members include the cities of McKinney, Celina, Princeton, Prosper, Melissa, Lowry Crossing, and Collin County; and

WHEREAS, the Parties desire to amend the Agreement to add provisions required by the Federal Transit Administration ("FTA") to comply with federal contracting guidelines; and

WHEREAS, the Parties also desire to amend the Agreement to clarify DCTA's scope of services for two (2) 2014 Glaval Titan LF buses ("**Buses**") for the purpose of public transportation services for the MUTD.

NOW, THEREFORE, in consideration of the above recitals, the mutual promises that follow and other good and valuable consideration, the receipt and legal sufficiency of which are hereby acknowledged by the Parties, the Parties agree as follows:

Section 1. All of the above Recitals are found to be true and correct and are incorporated into the body of this Second Amendment by reference as if copied in their entirety herein.

Section 2. Unless specifically amended herein, all provisions of the Agreement shall continue in full force and effect.

Section 3. Paragraph 1.1 of Article I, entitled "Purpose of Trips; Eligibility," of the Agreement, is hereby amended and replaced in its entirety with the following paragraph to read as follows:

"1.1 The purpose of this Agreement is to provide for the administration and operation of transit services program for eligible passengers as defined by the policies of the Board to destinations located within Collin County municipalities and other destinations as may be defined in the future by the MUTD Board (the "Transit Services"). DCTA shall deliver or cause to be delivered through third-parties, transportation to eligible passengers through the Transit Services as defined in Exhibit "A," as previously amended, and as further modified, amended and supplemented by Exhibits "C" and "D" of this Agreement."

Section 4. Paragraph 3.1 of Article III, entitled "Services," of the Agreement is hereby amended and replaced in its entirety with the following paragraph to read as follows:

"3.1 DCTA shall provide the Transit Services as set forth in Exhibit "A," as previously amended, and as further modified, amended and supplemented by Exhibits "C" and "D" of this Agreement."

Section 5. Paragraph No. 3.2, entitled "Compliance with Americans with Disabilities and Other Laws," of the Agreement is hereby amended and replaced in its entirety with the following paragraph to read as follows:

"3.2 Compliance with Americans with Disabilities and Other Laws. DCTA acknowledges and understands that it is responsible for complying with, and agrees to comply with, the requirements of the Americans with Disabilities Act, as amended, in providing the Transit Services. In addition, DCTA acknowledges and understands that it is responsible for complying with, and agrees to comply with, all other federal, state and local laws, statutes, ordinances, regulations and policies, as they exist now or may be amended in the future, applicable to DCTA and the Transit Services provided under this Agreement specifically including, but not limited to the provisions and compliance documentation identified in Exhibit "C" to this Agreement. DCTA shall ensure that its officers, employees, agents, contractors and other parties performing services for or on behalf of DCTA comply with all applicable laws, statutes, ordinances, regulations and policies."

Section 6. Paragraph 4.1 of Article IV, entitled "Compensation and Fees," of the Agreement is hereby amended and replaced in its entirety with the following paragraph to read as follows:

"4.1 DCTA shall be compensated as set forth in Exhibit "A," as previously amended, and as further modified, amended and supplemented by Exhibits "C" and "D" of this Agreement."

Section 7. The Agreement is hereby amended by adding a new Exhibit "C" entitled "Required FTA Clauses and Compliance Documentation" together with Attachment "A" to Exhibit "C,"

Attachment "A.1" to Exhibit "C," Attachment "B" to Exhibit "C," and Attachment "B.1" to Exhibit "C" to the Agreement, which Exhibit "C" and Attachment "A" to Exhibit "C," Attachment "A.1" to Exhibit "C," Attachment "B" to Exhibit "C," and Attachment "B.1" to Exhibit "C" are attached hereto and incorporated herein by reference for all purposes allowed by law.

Section 8. The Agreement is hereby further amended by adding a new Exhibit "D" entitled "Scope of Services for Buses" to the Agreement, which Exhibit "D" is attached hereto and incorporated herein by reference for all purposes allowed by law.

Section 9. Any term not defined herein shall be deemed to have the same meaning ascribed to it under the Agreement.

Section 10. The Parties hereby ratify and confirm all of the terms, provisions, covenants and conditions of the Agreement and acknowledge and agree that the Agreement remains in full force and effect except as specifically amended hereby.

Section 11. To the extent that any provision contained in this Second Amendment conflicts with the Agreement, the provision contained in this Second Amendment shall supersede such conflicting provisions contained in the Agreement.

Section 12. This Second Amendment and the Agreement contain the entire agreement of the Parties with respect to the matters contained herein. This Second Amendment may not be modified or terminated except upon the provisions hereof or by the mutual written agreement of the parties hereto.

Section 13. The individuals executing this Second Amendment on behalf of the respective Parties below represent to each other and to others that all appropriate and necessary action has been taken to authorize the individual who is executing this Second Amendment to do so for and on behalf of the Party for which his or her signature appears, that there are no other Parties or entities required to execute this Second Amendment in order for the same to be an authorized and binding agreement on the Party for whom the individual is signing this Second Amendment and that each individual affixing his or her signature hereto is authorized to do so, and such authorization is valid and effective on the Effective Date.

Section 14. This Second Amendment may be executed in a number of identical counterparts, each of which shall be deemed an original for all purposes, and all such counterparts shall, collectively, constitute one Second Amendment. An electronic mail or facsimile signature will also be deemed to constitute an original if properly executed and delivered to the other party.

[Signatures begin on following page.]

EXECUTED to be effective on the date of the last Party to sign the Agreement, as indicated below.

CITY OF McKINNEY

By: _____
PAUL G. GRIMES
City Manager

Date Signed: 1/19/18

ATTEST:

_____ 1/22/18
SANDY HART, TRMC, MMC
City Secretary
DENISE VICE, TRMC
Assistant City Secretary

CITY OF McKINNEY TEXAS COLLIN COUNTY, TEXAS

APPROVED AS TO FORM:

_____
MARK S. HOUSER
City Attorney

DENTON COUNTY TRANSPORTATION AUTHORITY

By: _____
JAMES C. CLINE, JR., P.E.
President

Date Signed: 13 February 2018

APPROVED AS TO FORM:

_____
FOR PETER G. SMITH
General Counsel

Exhibit C
Required FTA Clauses and Compliance Documentation

For the purposes of this Exhibit C, only, the word "Purchaser" shall mean and refer to City of McKinney or City and the word "Contractor" shall mean and refer to Denton County Transportation Authority or DCTA.

1. **No Obligation by the Federal Government**

   a. The Purchaser and Contractor acknowledge and agree that, notwithstanding any concurrence by the Federal Government in or approval of the solicitation or award of the underlying contract, absent the express written consent by the Federal Government, the Federal Government is not a party to the contract and shall not be subject to any obligations or liabilities to the Purchaser Contractor or any other party (whether or not a party to that contract) pertaining to any matter resulting from the underlying contract.

   b. The Contractor agrees to include the above clause in each subcontract financed in whole or in part with Federal assistance provided by FTA. It is further agreed that the clause shall not be modified, except to identify the subcontractor who will be subject to its provisions.

2. **Program Fraud and False or Fraudulent Statements and Related Acts**

   a. The Contractor acknowledges that the provisions of the Program Fraud Civil Remedies Act of 1986, as amended, 31 U.S.C. § 3801 et seq. And U.S. DOT regulations, "Program Fraud Civil Remedies, "49 C.F.R. Part 31, apply to its actions pertaining to this Project. Upon execution of the underlying contract, the Contractor certifies or affirms the truthfulness and accuracy of any statement it has made, it makes, it may make, or causes to be made, pertaining the underlying contract or the FTA assisted project for which the contract work is being performed. In addition to other penalties that may be applicable, the Contractor further acknowledges that if it makes, or causes to be made, a false, fictitious, or fraudulent claim, statement, submission, or certification, the Federal Government reserves the right to impose the penalties of the Program Fraud Civil Remedies Act of 1986 on the Contractor to the extent the Federal Government deems appropriate.

   b. The Contractor also acknowledges that if it makes, or causes to be made, a false, fictitious, or fraudulent claim, statement, submission, or certification to the Federal Government under a contract connected with a project that is financed in whole or in part with Federal assistance originally awarded by FTA under the authority of 49 U.S.C. § 5307, the government reserves the right to impose the penalties of 18

U.S.C. § 1001 and 49 U.S.C. § 5307(n)(1) on the Contractor, to the extend the Federal Government deems appropriate.

c. The Contractor agrees to include the above two clauses in each subcontract financed in whole or in part with Federal assistance provided by FTA. It is further agreed that the clauses shall not be modified, except to identify the subcontractor who will be subject to the provisions.

3. **Access to Records**

a. Where the Purchaser is not a State but a local government and is the FTA Recipient or a subgrantee of the FTA Recipient in accordance with 49 C.F.R 18.36(i), the Contractor agrees to provide the Purchaser, the FTA Administrator, the Comptroller General of the United States or any of their authorized representatives access to any books, documents, papers and records of the Contractor which are directly pertinent to this contract for the purposes of making audits, examinations, excerpts, and transcriptions. Contractor also agrees, pursuant to 49 C.F.R 633.17 to provide the FTA Administrator or authorized representatives including any PMO Contractor access to Contractor's records and construction sites pertaining to a major capital project, define at 49 U.S.C. 5302 (a)1, which is receiving federal financial assistance through the programs described at 49 U.S.C. 5307, 5309 or 5311.

b. Where the Purchaser is a State and is the FTA Recipient or a subgrantee of the FTA Recipient in accordance with 49 C.F.R 633.17, Contractor agrees to provide the Purchaser, the FTA Administrator or authorized representatives including any PMO Contractor access to Contractor's records and construction sites pertaining to a major capital project, define at 49 U.S.C. 5302 (a)1, which is receiving federal financial assistance through the programs described at 49 U.S.C. 5307, 5309 or 5311. By definition, a major capital project excludes contracts of less than the simplified acquisition threshold currently set at $100,000.

c. Where the Purchaser enters into a negotiated contract for other than a small purchase or under the simplified acquisition threshold and is an institution of higher education, a hospital or other non-profit organization and is the FTA Recipient or a subgrantee of the FTA Recipient in accordance with 49 C.F.R 19.48, Contractor agrees to provide the Purchaser, the FTA Administrator, the Comptroller General of the United States or any of their authorized representatives access to any books, documents, papers and records of the Contractor which are directly pertinent to this contract for the purposes of making audits, examinations, excerpts, and transcriptions.

d. Where any Purchaser which is the FTA Recipient or a subgrantee of the FTA Recipient in accordance with 49 U.S.C. 5325(a) enters into a contract for a capital project or improvement (define at 49 U.S.C. 5302(a)1) through other than competitive bidding, the Contractor shall make available records related to the contract to the Purchaser, the Secretary of Transportation and the Comptroller General or any authorized officer or employee of any of them for the purposes of conducting an audit or inspection.

e. The Contractor agrees to permit any of the foregoing parties to reproduce by any means whatsoever or to copy excerpts and transcriptions as reasonably needed.

f. The Contractor agrees to maintain all books, records, accounts and reports required under this contract for a period of not less than three years after the date of termination or expiration of this contract, except in the event of litigation or settlement of claims arising from the performance of this contract, in which case Contractor agrees to maintain same until the Purchaser, the FTA Administrator, the Comptroller General, or any of their duly authorized representatives, have disposed of all such litigation, appeals, claims or exceptions related thereto. Reference 49 C.F.R. 18.39(i)11).

g. FTA does not require the inclusion of the above Access to Records requirements in subcontracts.

4. **Federal Changes**

a. Contractor shall at all times comply with all applicable FTA regulations, policies, procedures and directives, including without limitation those listed directly or by reference in the Master Agreement between Purchaser and FTA, as they may be amended or promulgated from time to time during the term of this contract. Contractor's failure to so comply shall constitute a material breach of contract.

5. **Civil Rights**

a. Nondiscrimination - - In accordance with Title VII of the Civil Rights Act, as amended, 42 U.S.C. § 2000d, section 303 of the Age Discrimination Act of 1975, as amended, 42 U.S.C. § 6102, section 202 of the Americans with Disabilities Act of 1990, 42 U.S.C. § 12132, and Federal transit law at 49 U.S.C. § 5332, the Contractor agrees that it will not discriminate against any employee or applicant for employment because of race, color, creed, national origin, sex, age, or disability. In addition, the Contractor agrees to comply with applicable Federal implementing regulations and other implementing requirements FTA may issue.

b. Equal Employment Opportunity - The following equal employment opportunity requirements apply to the underlying contract:

i. Race, Color, Creed, National Origin, Sex - In accordance with Title VII of the Civil Rights Act, as amended, 42 U.S.C. § 2000e, and Federal transit laws at 49 U.S.C. § 5332, the Contractor agrees to comply with all applicable equal employment opportunity requirements of U.S. Department of Labor (U.S. DOL) regulations, "Office of Federal Contract Compliance Programs, Equal Employment Opportunity, Department of Labor," 41 C.F.R. Parts 60 - The following equal employment opportunity requirements apply to the underlying contract: et seq 2. Age - In accordance with section 4 of the Age Discrimination in Employment Act of 1967, as amended, 29 U.S.C. § § 623 and Federal transit law at 49 U.S.C. § 5332, the Contractor agrees to refrain from discrimination against present and prospective employees for reason of age. In addition, the Contractor agrees to comply with any implementing requirements FTA may issue. ., (which implement Executive Order No. 11246, "Equal Employment Opportunity," as amended by Executive Order No. 11375, "Amending Executive Order 11246 Relating to Equal Employment Opportunity," 42 U.S.C. § 2000e note), and with any applicable Federal statutes, executive orders, regulations, and Federal policies that may in the future affect construction activities undertaken in the course of the Project. The Contractor agrees to take affirmative action to ensure that applicants are employed, and that employees are treated during employment, without regard to their race, color, creed, national origin, sex, or age. Such action shall include, but not be limited to, the following: employment, upgrading, demotion or transfer, recruitment or recruitment advertising, layoff or termination; rates of pay or other forms of compensation; and selection for training, including apprenticeship. In addition, the Contractor agrees to comply with any implementing requirements FTA may issue.

ii. Age - In accordance with section 4 of the Age Discrimination in Employment Act of 1967, as amended, 29 U.S.C. § § 623 and Federal transit law at 49 U.S.C. § 5332, the Contractor agrees to refrain from discrimination against present and prospective employees for reason of age. In addition, the Contractor agrees to comply with any implementing requirements FTA may issue.

iii. Disabilities - In accordance with section 102 of the Americans with Disabilities Act, as amended, 42 U.S.C. § 12112, the Contractor agrees that it will comply with the requirements of U.S. Equal Employment Opportunity Commission, "Regulations to Implement the Equal Employment Provisions of the Americans with Disabilities Act," 29 C.F.R.

Part 1630, pertaining to employment of persons with disabilities. In addition, the Contractor agrees to comply with any implementing requirements FTA may issue.

c. The Contractor also agrees to include these requirements in each subcontract financed in whole or in part with Federal assistance provided by FTA, modified only if necessary to identify the affected parties.

6. **Incorporation of FTA Terms**

a. The preceding provisions include, in part, certain Standard Terms and Conditions required by DOT, whether or not expressly set forth in the preceding contract provisions. All contractual provisions required by DOT, as set forth in FTA Circular 4220.1F, are hereby incorporated by reference. Anything to the contrary herein notwithstanding, all FTA mandated terms shall be deemed to control in the event of a conflict with other provisions contained in this Agreement. The Contractor shall not perform any act, fail to perform any act, or refuse to comply with any Purchaser requests which would cause Purchaser to be in violation of the FTA terms and conditions.

7. **Energy Conservation**

a. The contractor agrees to comply with mandatory standards and policies relating to energy efficiency which are contained in the state energy conservation plan issued in compliance with the Energy Policy and Conservation Act.

8. **Privacy Act**

The following requirements apply to the Contractor and its employees that administer any system of records on behalf of the Federal Government under any contract:

a. The Contractor agrees to comply with, and assures the compliance of its employees with, the information restriction and other applicable requirements of the Privacy Act of 1974, 5 U.S.C. § 552a. Among other things, the Contractor agrees to obtain the express consent of the Federal Government before the Contractor or its employees operate a system of records on behalf of the Federal Government. The Contractor understands that the requirements of the Privacy Act, including the civil and criminal penalties for violation of that Act, apply to those individuals involved, and that failure to comply with the terms of the Privacy Act may result in termination of the underlying contract.

b. The Contractor also agrees to include these requirements in each subcontract to administer any system of records on behalf of the Federal Government financed in whole or in part with Federal assistance provided by FTA.

9. **Termination Clause**

a. If the Contractor refuses or fails to execute the work or any separable part, with the diligence that will insure its completion within the time specified in this contract or any extension or fails to complete the work within this time, or if the Contractor fails to comply with any other provisions of this contract, Purchaser may terminate this contract for default. The Purchaser shall terminate by delivering to the Contractor a Notice of Termination specifying the nature of the default. In this event, the Purchaser may take over the work and compete it by contract or otherwise, and may take possession of and use any materials, appliances, and plant on the work site necessary for completing the work. The Contractor and its sureties shall be liable for any damage to Purchaser resulting from the Contractor's refusal or failure to complete the work within specified time, whether or not the Contractor's right to proceed with the work is terminated. This liability includes any increased costs incurred by the Purchaser in completing the work.

The Contractor's right to proceed shall not be terminated, nor shall the Contractor be charged with damages, under this clause if:

i. The delay in completing the work arises from unforeseeable causes beyond the control and without the fault or negligence of the Contractor. Examples of such causes include: acts of God, acts of the Recipient, acts of another Contractor in the performance of a contract with the Purchaser, epidemics, quarantine restrictions, strikes, freight embargoes; and

ii. The contractor, within [10] days from the beginning of any delay, notifies the Purchaser in writing of the causes of delay. If in the judgment of the Purchaser, the delay is excusable, the time for completing the work shall be extended. The judgment of the Purchaser shall be final and conclusive on the parties, but subject to appeal under the Disputes clauses.

10. **Debarment and Suspension**

a. Title 2 of the Code of Federal Regulations (CFR), Subtitle A, Part 180 [OMB Guidelines for Agencies on Government-wide Suspension and Debarment (Non-Procurement)] and under DOT supervision through Subtitle B, Part 1200 (Non-Procurement Debarment and Suspension) mandate that contractors and subcontractors (at any level) that enter into covered transactions are required to verify that the entity (as well as its principals and affiliates) they propose to contract

or subcontract with is not excluded or disqualified. The contract resulting from this procurement is a covered transaction for purposes of 2 CFR Part 180. The Purchaser does this by checking the Excluded Parties List System and adding a clause or condition to the contract. As such, the contractor is also required to verify that none of its principals, affiliates, or sub-contractors are excluded or disqualified and must include the requirement to comply with 2 CFR Part 180, Subpart C in any lower tier covered transaction it enters into. The Contractor and its subcontractors shall comply with special provision "Certification Requirements for Recipients of Grants and Cooperative Agreements Regarding Debarments and Suspensions," which is included as Attachment A.

11. **Buy America**

a. The contractor agrees to comply with 49 U.S.C. 5323(j) and 49 C.F.R. Part 661, which provide that Federal funds may not be obligated unless steel, iron, and manufactured products used in FTA-funded projects are produced in the United States, unless a waiver has been granted by FTA or the product is subject to a general waiver. General waivers are listed in 49 C.F.R. 661.7, and include final assembly in the United States for 15 passenger vans and 15 passenger wagons produced by Chrysler Corporation, and microcomputer equipment and software. Separate requirements for rolling stock are set out at 49 U.S.C. 5323(j)(2)(C) and 49 C.F.R. 661.11. Rolling stock must be assembled in the United States and have a 60% domestic content.

12. **Provisions for Resolution of Disputes, Breaches, or other Litigation**

a. All contracts in excess of $100,000 shall contain provisions or conditions which will allow for administrative, contractual, or legal remedies in instances where contractors violate or breach contract terms, and provide for such sanctions and penalties as may be appropriate. This may include provisions for bonding, penalties for late or inadequate performance, retained earnings, liquidated damages or other appropriate measures.

13. **Lobbying**

a. The Contractor of these funds is prohibited from using monies for lobbying purposes; the Contractor shall comply with the special provision "Lobbying," which provision is included as Attachment "B" to this Exhibit "C" to the Agreement. The Contractor shall include a statement of compliance with the Lobbying Certification and Disclosure of Lobbying Activities in applicable procurement solicitations. Lobbying Certification and Disclosure of Lobbying Activities shall be completed by subcontractors and included in subcontractor contracts, as applicable.

14. **Clean Air Requirements**

a. The Contractor agrees to comply with all applicable standards, orders or regulations issued pursuant to the Clean Air Act, as amended, 42 U.S.C. §§ 7401 et seq. The Contractor agrees to report each violation to the Purchaser and understands and agrees that the Purchaser will, in turn, report each violation as required to assure notification to FTA and the appropriate EPA Regional Office.

b. The Contractor also agrees to include these requirements in each subcontract exceeding $100,000 financed in whole or in part with Federal assistance provided by FTA

15. **Clean Water Requirements**

a. The Contractor agrees to comply with all applicable standards, orders or regulations issued pursuant to the Federal Water Pollution Control Act, as amended, 33 U.S.C. 1251 et seq. The Contractor agrees to report each violation to the Purchaser and understands and agrees that the Purchaser will, in turn, report each violation as required to assure notification to FTA and the appropriate EPA Regional Office.

b. The Contractor also agrees to include these requirements in each subcontract exceeding $100,000 financed in whole or in part with Federal assistance provided by FTA.

16. **Non-construction Employee Protection (Contact Work Hours and Safety Standards Act)**

a. Overtime requirements - No contractor or subcontractor contracting for any part of the contract work which may require or involve the employment of laborers or mechanics shall require or permit any such laborer or mechanic in any workweek in which he or she is employed on such work to work in excess of forty hours in such workweek unless such laborer or mechanic receives compensation at a rate not less than one and one-half times the basic rate of pay for all hours worked in excess of forty hours in such workweek.

b. Violation; liability for unpaid wages; liquidated damages – In the event of any violation of the clause set forth in paragraph (a) of this section the contractor and any subcontractor responsible therefore shall be liable for the unpaid wages. In addition, such contractor and subcontractor shall be liable to the United States for liquidated damages. Such liquidated damages shall be computed with respect to each individual laborer or mechanic, including watchmen and guards, employed in violation of the clause set forth in paragraph (a) of this section, in the sum of $10

for each calendar day on which such individual was required or permitted to work in excess of the standard workweek of forty hours without payment of the overtime wages required by the clause set forth in paragraph (a) of this section.

c. Withholding for unpaid wages and liquidated damages – The Purchaser shall upon its own action or upon written request of an authorized representative of the Department of Labor withhold or cause to be withheld, from any moneys payable on account of work performed by the contractor or subcontractor under any such contract or any other Federal contract with the same prime contractor, or any other federally-assisted contract subject to the Contract Work Hours and Safety Standards Act, which is held by the same prime contractor, such sums as may be determined to be necessary to satisfy any liabilities of such contractor or subcontractor for unpaid wages and liquidated damages as provided in the clause set forth in paragraph (b) of this section.

d. Subcontracts - The contractor or subcontractor shall insert in any subcontracts the clauses set forth in paragraphs (a) through (d) of this section and also a clause requiring the subcontractors to include these clauses in any lower tier subcontracts. The prime contractor shall be responsible for compliance by any subcontractor or lower tier subcontractor with the clauses set forth in paragraphs (a) through (d) of this section.

17. **Transit Employee Protective Arrangements**

The Contractor agrees to comply with applicable transit employee protective requirements as follows:

a. General Transit Employee Protective Requirements - To the extent that FTA determines that transit operations are involved, the Contractor agrees to carry out the transit operations work on the underlying contract in compliance with terms and conditions determined by the U.S. Secretary of Labor to be fair and equitable to protect the interests of employees employed under this contract and to meet the employee protective requirements of 49 USC A 5333(b), and U.S. DOL guidelines at 29 CFR Part 215, and any amendments thereto. These terms and conditions are identified in the letter of certification from the U.S. DOL to FTA applicable to the FTA Recipient's project from which Federal assistance is provided to support work on the underlying contract. The Contractor agrees to carry out that work in compliance with the conditions stated in that U.S. DOL letter. The requirements of this subsection, however, do not apply to any contract financed with Federal assistance provided by FTA either for projects for elderly individuals and individuals with disabilities authorized by 49 U.S.C. § 5310(a)(2), or for projects for non-urbanized areas authorized by 49 U.S.C. § 5311. Alternate provisions for those projects are set forth in subsections (b) and (c) of this clause.

b. Transit Employee Protective Requirements for Projects Authorized by 49 U.S.C §5310(a)(2) for Elderly Individuals and Individuals with Disabilities – If the contract involves transit operations financed in whole or in part with Federal assistance authorized by 49 U.S.C. § 5310 (a)(2),n and if the U.S. Secretary of Transportation has determined or determines in the future that the employee protective requirements of 49 U.S.C. § 5333(b) are necessary or appropriate for the state and the public body sub-recipient for which work is performed on the underlying contract, the Contractor agrees to carry out the Project in compliance with the terms and conditions determined by the U.S. Secretary of Labor to meet the requirements of 49 U.S.C. §5333(b), U.S. DOL guidelines at 29 CFR Part 215, and any amendments thereto. These terms and conditions are identified in the U.S. DOL's letter of certification to FTA, the date of which is set forth Grant Agreement or Cooperative Agreement with the state. The Contractor agrees to perform transit operations in connection with the underlying contract in compliance with the conditions stated in that U.S. DOL letter.

c. Transit Employee Protective Requirements for Projects Authorized by 49 U.S.C. §5311 in Non-urbanized Areas – If the contract involves transit operations financed in whole or in part with Federal assistance authorized by 49 U.S.C. § 5311, the Contractor agrees to comply with the terms and conditions of the Special Warranty for the Non-urbanized Area Program agreed to by the U.S. Secretaries of Transportation and Labor, dated May 31, 1979, and the procedures implemented by U.S. DOL or any revision thereto.

The Contractor also agrees to include the any applicable requirements in each subcontract involving transit operations financed in whole or in part with Federal assistance provided by FTA.

18. **Charter Service Operations**

a. The contractor agrees to comply with 49 U.S.C. 5323(d) and 49 CFR Part 604, which provides that recipients and sub-recipients of FTA assistance are prohibited from providing charter service using federally funded equipment or facilities if there is at least one private charter operator willing and able to provide the service, except under one of the exceptions at 49 CFR 604.9. Any charter service provided under one of the exceptions must be "incidental," i.e., it must not interfere with or detract from the provision of mass transportation.

19. **School Bus Operations**

a. Pursuant to 49 U.S.C. 5323(f) and 49 CFR Part 605, recipients and sub-recipients of FTA assistance may not engage in school bus operations exclusively for the

transportation of students and school personnel in competition with private school bus operators unless qualified under specified exemptions. When operating exclusive school bus service under an allowable exemption, recipients and sub-recipients may not use federally funded equipment, vehicles, or facilities.

20. **Drug and Alcohol Testing**

FTA's drug and alcohol rules, 49 CFR 653 and 654, respectively, are unique among the regulations issued by FTA. First, they require recipients to ensure that any entity performing a safety sensitive function on the recipient's behalf (usually sub-recipients and/or contractors) implement a complex drug and alcohol testing program that complies with Parts 653 and 654. Second, the rules condition the receipt of certain kinds of FTA funding on the recipient's compliance with the rules; thus, the recipient is not in compliance with the rules unless every entity that performs a safety-sensitive function on the recipient's behalf is in compliance with the rules. Third, the rules do not specify how a recipient ensures that its subrecipients and/or contractors comply with them.

How a recipient does so depends on several factors, including whether the contractor is covered independently by the drug and alcohol rules of another Department of Transportation operating administration, the nature of the relationship that the recipient has with the contractor, and the financial resources available to the recipient to oversee the contractor's drug and alcohol testing program. In short, there are a variety of ways a recipient can ensure that its sub-recipients and contractors comply with the rules. Therefore, FTA has developed three model contract provisions for recipients to use "as is" or to modify to fit their particular situations.

a. Drug and Alcohol Testing Option 1 - The contractor agrees to participate in the Purchaser's drug and alcohol program established in compliance with 49 CFR 653 and 654.

b. Drug and Alcohol Testing Option 2 - The contractor agrees to establish and implement a drug and alcohol testing program that complies with 49 CFR Parts 653 and 654, produce any documentation necessary to establish its compliance with Parts 653 and 654, and permit any authorized representative of the United States Department of Transportation or its operating administrations, or the City of McKinney, to inspect the facilities and records associated with the implementation of the drug and alcohol testing program as required under 49 CFR Parts 653 and 654 and review the testing process. The contractor agrees further to certify annually its compliance with Parts 653 and 654 before the _15th_ day of _January_, 2018_, and to submit the Management Information System (MIS) reports before the _15th__ day of _January__, 2019__, to __Anthony Cao_____, in his/her capacity as _Transit Administrator__ of the City of McKinney, Texas, at _406 N. Tennessee __, McKinney, Texas, _75069__. To certify compliance the contractor shall use the "Substance Abuse Certifications: in the "Annual List of Certifications and

Assurances for Federal Transit Administration Grants and Cooperative Agreements," which is published annually in the Federal Register.

c. Drug and Alcohol Testing Option 3 - The contractor agrees to establish and implement a drug and alcohol testing program that complies with 49 CFR Parts 653 and 654, produce any documentation necessary to establish its compliance with Parts 653 and 654, and permit any authorized representative of the United States Department of Transportation or its operating administrations, or the City of McKinney to inspect the facilities and records associated with the implementation of the drug and alcohol testing program as required under 49 CFR Parts 653 and 654 and review the testing process. The contractor agrees further to certify annually its compliance with Parts 653 and 654 before the ___ day of _____, 20___, and to submit the Management Information System (MIS) reports before the ___ day of _____, 20___, to _____, in his/her capacity as _____ of the City of McKinney, Texas, at _____, McKinney, Texas, _____. To certify compliance, the contractor shall use the "Substance Abuse Certifications" in the "Annual List of Certifications and Assurances for Federal Transit Administration Grants and Cooperative Agreements," which is published annually in the Federal Register. The Contractor agrees further to [Select a, b, or c] (a) submit before the ___ day of _____, 20___, a copy of the Policy Statement developed to implement its drug and alcohol testing program; OR (b) adopt _____ as its policy statement as required under 49 CFR 653 and 654; OR (c) submit for review and approval before the ___ day of _____, 20___, a copy of its Policy Statement developed to implement its drug and alcohol testing program. In addition, the contractor agrees to: _____ (to be determined by the recipient, but may address areas such as: the selection of the certified laboratory, substance abuse professional, or Medical Review Officer, or the use of a consortium).

21. **Disadvantaged Business Enterprise**

a. It is the police of the U.S. Department of Transportation that Disadvantaged Business Enterprises as defined in the 49 C.F.R., Part 26, Subpart A, shall have the maximum opportunity to participate in the performance of contracts financed in whole or part which federal funds under this agreement. Consequently, the DBE requirements of 49 C.F.R., Part 26, exclusive of Subpart D, apply to this agreement. The Purchaser and its subcontractors agree to ensure that Disadvantaged Business Enterprises as defined in the 49 C.F.R., Part 26, Subpart A, have the maximum opportunity to participate in the performance on contracts and subcontracts financed in whole in part with federal funds provided under this agreement. In this regard, the Purchaser and its subcontractors shall take all necessary and reasonable steps in accordance with 49 C.F.R., Part 26, exclusive of Subpart D, to ensure that

Disadvantaged Business Enterprises have the maximum opportunity to compete for and perform contracts. The Purchaser and its subcontractors shall not discriminate on the basis of race, creed, color, national origin, sex, or disability, in the award and performance of contracts funded in whole or in part with federal funds.

22. **Recycled Products**

The Recycled Products requirements apply to all procurement actions involving items designated by the EPA in their "Comprehensive Procurement Guideline for Products Containing Recovered Materials". The RCRA directs the procuring agency, for purchases over $10,000 or more, to specify a competitive preference for products containing these recycled products. FTA has developed the following language:

a. Recovered Materials – The contractor agrees to comply with all the requirements of Section 6002 of the Resource Conservation and Recovery Act (RCRA), as amended (42 U.S.C. 6962), including but not limited to the regulatory provisions of 40 CFR Part 247, and Executive Order 12873, as they apply to the procurement of the items designated in Subpart B of 40 CFR Part 247

23. **Americans with Disabilities Act**

a. The Contractor must comply with applicable requirements of the Americans with Disabilities Act of 1990 (ADA), Section 504 of the Rehabilitation Act of 1973, and US DOT/FTA implementing regulations.

Attachment A to Exhibit C
Debarment Certification

Certification Requirements for Recipients of Grants and Cooperative Agreements Regarding Debarment and Suspension

Department of Transportation (DOT) Circular 2015.1 excludes entities and individuals that the federal government has either debarred or suspended from obtaining federal assistance funds through grants, cooperative agreements, or third-party contracts. The City of McKinney has elected to include the requirements of the DOT Circular 2015.1 in all third-party contracts for federal funds. A certification process has been established by 49 C.F.R. Part 29 as a means to ensure that debarred, suspended, or voluntarily, excluded persons do not participate in a federally assisted project. The inability of a person to provide the required certification will not necessarily result in a denial of participation in a covered transaction. A person that is unable to provide a positive certification as set forth in the Circular may submit a complete explanation attached to the certification. DOT will consider the certification and any accompanying explanation in determining whether or not to provide assistance for the project. Failure to furnish a certification or any explanation may disqualify that person from participating in the project.

Each potential third-party contractor, subcontractor under a third-party contract, subgrantee, or subrecipient must provide to the grantee or recipient of a cooperative agreement, as appropriate, a certification for a lower tier participant. In general, lower-level employees or procurements of less than $25,000 will not be covered by the certification process procedures, except in the case of procurements with individuals that would have a critical influence on or substantive control over the project; nevertheless, a participant is not authorized to involve a lower-level employee or enter into a contract of less than $25,000 with a person actually known by the participant to be debarred, suspended or voluntarily excluded.

The City of McKinney requires each potential contractor, subgrantee, or subrecipient for a third-party contract to complete the certification in Attachment A.1 for itself and its principals.

If an applicant for a grant or cooperative agreement or a potential contractor for a third-party contract knowingly enters into a lower-tier covered transaction such as a third-party contract or subcontract under a major third-party contract or subgrant with a person that is suspended, debarred, ineligible, or voluntarily excluded from participation in the project, in additional to other remedies available to the federal government, DOT may terminate the grant or subcontract, the underlying grant or cooperative agreement for cause or default.

Certification Information

This certification is to be used by contractors pursuant to 49 C.F.R. 29 when any of the following occur:

- Any transaction between the contractor and a person (other than a procurement contract for goods and services), regardless of type, under a primary covered transaction
- Any procurement contract for goods or services when the estimated cost is $25,000 or more
- Any procurement contract for goods or services between the contractor and a person, regardless of the amount, under which the person will have a critical influence on or substantive control over that covered transaction. Such persons include principal investigators and providers of federally required audit services

A *procurement* transaction is the process of acquiring goods and services.

A *nonprocurement* transaction is the granting of financial assistance to entities to assist the grantor in meeting objectives that are mutually beneficial to the grantee or grantor.

A COPY OF THIS CERTIFICATION IS TO BE FURNISHED TO AUTHORIZED REPRESENTATIVES OF THE STATE OR THE U.S. DEPARTMENT OF TRANSPORTATION UPON REQUEST.

Attachment A.1 to Exhibit C
Certification

Lower Tier Participation Debarment Certification
(Negotiated Contracts)

_____, the undersigned Certifying Official, being duly sworn or under penalty of perjury under the laws of the United States. Certifies that neither _____, (the "Lower Tier Participant") nor its principals are presently:

- Debarred, suspended, proposed for debarment
- Declared ineligible
- Or voluntarily excluded from participation in this transaction by any federal department or agency

Where the above identified Lower Tier Participant is unable to certify to any of the above statements in this certification, the prospective Lower Tier Participant shall indicate below to whom the exceptions applies, the initiating agency, and dates of action.

Exceptions will not necessarily result in denial of award but will be considered in determining contractor responsibility. Providing false information may result in criminal prosecution or administrative sanctions.

EXCEPTIONS:

_____

_____

_____

_____

_____

_____

_____
Signature of Certifying Official

Name: _____

Title: _____

Date: _____

Attachment B to Exhibit C
Lobbying Certification

Restrictions on Lobbying

Section 319 of Public Law 101-121 prohibits recipients of federal contracts, grants, and loans exceeding $100,000 at any tier under a federal contract from using appropriated funds for lobbying the Executive or Legislative Branches of the federal government in connection with a specific contract, grant, or loan. Section 319 also requires each person who requests or receives a federal contract or grant in excess of $100,000 to disclose lobbying.

No appropriated funds may be expended by the recipient of a federal contract, loan, or cooperative agreement to pay any person for influencing or attempting to influence an officer or employee of any federal executive department or agency as well as any independent regulatory commission or government corporation, a Member of Congress, an officer or employee of Congress, or an employee of a Member of Congress in connection with any of the following covered federal actions: the awarding of any federal contract, the making of any federal grant, the making of any federal loan, the entering into of any cooperative agreement and the extension, continuation, renewal, amendment, or modification of any federal contract, grant, loan, or cooperative agreement.

As a recipient of a federal grant exceeding $100,000, the City of McKinney requires its subcontractors of that grant to file a certification, set for in Attachment B.1, that neither the agency nor its employees have made, or will make, any payment prohibited by the preceding paragraph.

Subcontractors are also required to file with the City of McKinney a disclosure form, set forth in Attachment B.1, if the subcontractor or its employees have made or have agreed to make any payment using non-appropriated funds (to include profits from any federal action), which would be prohibited if paid for with appropriated funds.

Attachment B.1 to Exhibit C

Lobbying Certification for Contracts, Grants, Loans, and Cooperative Agreements

The undersigned certifies to the best of his or her knowledge and belief, that:

1. No federal appropriated funds have been paid or will be paid by or on behalf of the undersigned, to any person for influencing or attempting to influence an officer or employee of any federal agency, a Member of Congress, an officer or employee of Congress, or an employee of a Member of Congress in connection with the awarding of any federal contract, the making of any federal grant, the making of any federal loan, the entering into of any cooperative agreement, and the extension continuation, renewal amendment, or modification of any federal contract, grant, loan, or cooperative agreement.

2. If any funds other than federal appropriated funds have been paid or will be paid to any person for influencing or attempting to influence an officer or employee of any agency, a Member of Congress, an officer or employee of Congress, or an employee of a Member of Congress in connection with this federal contract, grant, loan, or cooperative agreement, the undersigned shall complete and submit Standard Form – LLL, "Disclosure Form to Report Lobbying," in accordance with its instructions.

3. The undersigned shall require that the language of this certification be included in the award documents for all subawards at all tiers and that all subrecipients shall certify and disclose accordingly.

   This certification is a material representation of fact upon which reliance was placed when this transaction was made or entered into. Submission of this certification is a prerequisite for making or entering into the transaction imposed by Section 1352, Title 31, U.S. Code. Any person who fails to file the required certification shall be subject to civil penalty of not less than $10,000 and not more than $100,000 for each failure.

_____

Signature

Name: _____

Title: _____

Agency: _____

Date: _____

Exhibit D
Scope of Services for Buses

Overall Intent

The intent of this agreement is for DCTA to provide or cause to be provided bus services utilizing Glaval Titan II LF buses for residents deemed eligible by the McKinney Urban Transit District ("MUTD") through a contract with the City of McKinney acting on behalf of the MUTD. DCTA will provide bus service, maintenance and program compliance. This exhibit establishes a framework for the services to be provided by DCTA. Changes required to meet the needs of the program may be made by mutual written agreement of the DCTA President and the City Manager or their designee.

Bus Management

Overall Bus Management. DCTA will be responsible for the overall management and maintenance of the buses and the successful delivery of the services within this Scope of Services.

Budget Management. DCTA will track service costs to ensure the budgeted funds will be sustainable. Service cost reporting and all requested backup shall be made available to the City on a monthly basis. Service cost reporting for each monthly period shall be submitted with the monthly DCTA invoice.

Compliance Reporting. DCTA will support audit, TxDOT, FTA, and National Transit Database reporting and compliance requirements.

Customer Service. DCTA will provide a phone number and electronic access for the receipt of customer requests.

Support to City of McKinney and McKinney Urban Transit District. DCTA will continue to participate in reasonable meetings of the City of McKinney, MUTD, and regulatory agencies in order to ensure the success of the program.

Trip Dispatch. DCTA will provide dispatch services during normal operating hours.

Fare. If applicable, passengers will pay a fare established by the City for their trip.

Reporting. DCTA will provide reports relating to bus operations.

Compensation

Bus Management. Bus management will be compensated by a rate agreed upon by the City and DCTA on an annual basis.

Invoicing. DCTA will invoice the City of McKinney monthly for the provision of bus maintenance and transportation services as defined above.

DocuSign Envelope ID: 652D992E-1541-4574-9A1E-C8893571033A

McKINNEY TEXAS
Unique by nature.SM

DOCUMENT CONTROL

Please attach this form to original documents to obtain signatures.

FROM: Akia Pichon (DS) **DEPT:** CBDG **EXT:** 3497 **DATE:** 04/28/2020

NAME OF DOCUMENT: ILA Amendment 2 Month Extension of Service

VENDOR: DCTA **Contact #:**

TYPE OF DOCUMENT: (check one)

- ☐ Contract/Agreement
- ☑ Contract Amendment/Additional Srvs.
- ☐ Contract Change Order
- ☐ Lien/Lien Release

Start Date:

- ☐ Grant
- ☐ Administrative Order
- ☐ Easement

End Date:

- ☐ Facility Agreement
- ☐ Other _____
- ☐ Grant

Number of Documents Attached	1	
Date and Amount Approved by City Council *(if applicable)*	N/A	
Agenda # /Resolution Number *(if applicable)*	N/A	
Project Name and Project Number *(required for all AI, CO, DR, FA, FC, FI, GR, LI, PK, ST, TR, WA, WW projects)*	N/A	
Account No. *(if applicable)*	N/A	
Contract/Grant Value *(if applicable)*	N/A	

ROUTING

Please sign the attached documents, initial, and date form then forward to the next person checked for signature (must be routed in the order shown below):

Check box for required signatures		INITIALS	DATE
☒	**Executive Director** *(Required for all documents)*	JT	04/28/2020
☐	**Purchasing Manager** *(Required if goods or services are purchased)*		
☐	**CFO/Finance Director** *(Required for all revenue and expenses)*		
☐	**IT Director** *(Required if IT related)*		
☐	**Grant Administrator** *(Required for ALL grant related documents)*		
	SUBMIT TO CITY ADMINISTRATION FOR THE FOLLOWING SIGNATURES		
☐	**City Attorney** ☐ Review ☐ Sign		
☐	**Mayor**		
☑	**City Manager / Assistant City Manager** *(Required for all contracts)*	IGG (DS)	4/30/2020
☐	**Notary**		
☐	**City Secretary** ☐ Copy Only ☐ Sign		

RETURN *ALL* COPIES BY (date) ASAP

RETURN *ALL* COPIES TO Akia Pichon

Send original document (with all required signatures) and this completed form to the City Secretary. Date received by City Secretary: _____

DocuSign Envelope ID: 652D992E-1541-4574-9A1E-C8893571033A

STATE OF TEXAS §
§
§
COUNTY OF DENTON §

THIRD AMENDMENT TO INTERLOCAL COOPERATION AGREEMENT

This Third Amendment to Interlocal Cooperation Agreement is made and entered into by and between Denton County Transportation Authority ("DCTA") and City of McKinney, Texas ("McKinney") (each a "Party" and collectively the "Parties"), acting by and through their authorized representatives.

WHEREAS, the Parties previously entered into that certain Interlocal Cooperation Agreement which was effective on June 1, 2017 (the "Agreement"); and

WHEREAS, the Parties entered into the First Amendment to the Agreement dated October 26, 2017; and

WHEREAS, the Parties entered into the Second Amendment to the Agreement dated February 13, 2018; and

WHEREAS, the Parties desire to enter into this Third Amendment to the Agreement to extend the Term of the Agreement for sixty (60) days through July 31, 2020, and

WHEREAS, the Parties are authorized to enter into this Third Amendment to the Agreement pursuant to the Interlocal Cooperation Act (the "Act"), Chapter 791, Texas Government Code; and

WHEREAS, DCTA and McKinney are units of local government that have the statutory authority under the Act to perform the services set forth in the Agreement and this Third Amendment; and

WHEREAS, pursuant to Chapter 460 of the Texas Transportation Code, DCTA is authorized to enter into this Agreement with McKinney to provide the requested bus services; and

WHEREAS, each Party will make any required payments for services from current revenues available to such Party; and

WHEREAS, the Parties agree to amend the Agreement as set forth herein;

NOW THEREFORE, in consideration of the mutual promises contained herein and other valuable consideration the receipt and sufficiency of which are hereby acknowledged, the Parties agree as follows:

1. That Article II, **Term**, is hereby amended to read as follows:

DocuSign Envelope ID: 652D992E-1541-4574-9A1E-C8893571033A

"2.1 The Term of the Agreement shall be extended through July 31, 2020, unless sooner terminated as provided herein."

2. The Agreement shall continue in full force and effect except as amended herein. If any terms or conditions contained in this Third Amendment to the Agreement are inconsistent with the Agreement or First or Second Amendments, the terms and conditions contained in the Third Amendment will be controlling.

DocuSign Envelope ID: 652D992E-1541-4574-9A1E-C8893571033A

EXECUTED this 5th day of May, 2020.

Denton County Transportation Authority

By: _____
Raymond Suarez, Chief Executive Officer

Approved as to form:

By: _____
Joseph J. Gorfida, Jr., General Counsel
(04-27-2020:TM 115311)

EXECUTED this 30th day of April, 2020.

City of McKinney, Texas

DocuSigned by:
By: Paul G. Grimes
487E6E42C872437...
Name: Paul G. Grimes
Title: City Manager

Signer Events	Signature	Timestamp
Mark Houser mhouser@bhlaw.net By Alan Lathrom, Assistant City ACity Signing Group: City Attorney Security Level: Email, Account Authentication (None)	DocuSigned by: Mark Houser 17085939BB3846D... Signature Adoption: Pre-selected Style Using IP Address: 69.152.127.130	Sent: 7/9/2020 11:54:27 AM Viewed: 7/9/2020 12:09:06 PM Signed: 7/9/2020 12:09:58 PM
Electronic Record and Signature Disclosure: Accepted: 7/9/2020 12:09:06 PM ID: f7948ca9-84e4-4928-9233-fc8bad75ebad		
Paul G. Grimes pgrimes@mckinneytexas.org City Manager Security Level: Email, Account Authentication (None)	DocuSigned by: Paul G. Grimes 487F6E42C872437... Signature Adoption: Pre-selected Style Using IP Address: 50.84.129.124	Sent: 7/9/2020 12:10:04 PM Viewed: 7/10/2020 8:15:37 AM Signed: 7/10/2020 8:16:22 AM
Electronic Record and Signature Disclosure: Accepted: 7/10/2020 8:15:37 AM ID: 836046f0-f441-48bd-83f0-443643d26f81		

In Person Signer Events	Signature	Timestamp

Editor Delivery Events	Status	Timestamp

Agent Delivery Events	Status	Timestamp

Intermediary Delivery Events	Status	Timestamp

Certified Delivery Events	Status	Timestamp

Carbon Copy Events	Status	Timestamp
Angela Europe aeurope@mckinneytexas.org Jessica Redding jredding@mckinneytexas.org Records & Information Analyst City of McKinney Signing Group: Record Management Security Level: Email, Account Authentication (None) **Electronic Record and Signature Disclosure:** Not Offered via DocuSign	COPIED	Sent: 7/10/2020 8:16:30 AM Viewed: 7/10/2020 8:55:48 AM
Akia Pichon apichon@mckinneytexas.org Security Level: Email, Account Authentication (None) **Electronic Record and Signature Disclosure:** Not Offered via DocuSign	COPIED	Sent: 7/10/2020 8:16:31 AM Viewed: 7/10/2020 9:06:30 AM

Witness Events	Signature	Timestamp

Notary Events	Signature	Timestamp

Envelope Summary Events	Status	Timestamps
Envelope Sent	Hashed/Encrypted	7/10/2020 8:16:32 AM

Certified Delivered Security Checked 7/10/2020 8:16:32 AM

Envelope Summary Events	Status	Timestamps
Signing Complete	Security Checked	7/10/2020 8:16:32 AM
Completed	Security Checked	7/10/2020 8:16:32 AM

Payment Events	Status	Timestamps

Electronic Record and Signature Disclosure

ELECTRONIC RECORD AND SIGNATURE DISCLOSURE

From time to time, City of McKinney (we, us or Company) may be required by law to provide to you certain written notices or disclosures. Described below are the terms and conditions for providing to you such notices and disclosures electronically through your DocuSign, Inc. (DocuSign) Express user account. Please read the information below carefully and thoroughly, and if you can access this information electronically to your satisfaction and agree to these terms and conditions, please confirm your agreement by clicking the 'I agree' button at the bottom of this document.

Getting paper copies

At any time, you may request from us a paper copy of any record provided or made available electronically to you by us. For such copies, as long as you are an authorized user of the DocuSign system you will have the ability to download and print any documents we send to you through your DocuSign user account for a limited period of time (usually 30 days) after such documents are first sent to you. After such time, if you wish for us to send you paper copies of any such documents from our office to you, you will be charged a $0.00 per-page fee. You may request delivery of such paper copies from us by following the procedure described below.

Withdrawing your consent

If you decide to receive notices and disclosures from us electronically, you may at any time change your mind and tell us that thereafter you want to receive required notices and disclosures only in paper format. How you must inform us of your decision to receive future notices and disclosure in paper format and withdraw your consent to receive notices and disclosures electronically is described below.

Consequences of changing your mind

If you elect to receive required notices and disclosures only in paper format, it will slow the speed at which we can complete certain steps in transactions with you and delivering services to you because we will need first to send the required notices or disclosures to you in paper format, and then wait until we receive back from you your acknowledgment of your receipt of such paper notices or disclosures. To indicate to us that you are changing your mind, you must withdraw your consent using the DocuSign 'Withdraw Consent' form on the signing page of your DocuSign account. This will indicate to us that you have withdrawn your consent to receive required notices and disclosures electronically from us and you will no longer be able to use your DocuSign Express user account to receive required notices and consents electronically from us or to sign electronically documents from us.

All notices and disclosures will be sent to you electronically

Unless you tell us otherwise in accordance with the procedures described herein, we will provide electronically to you through your DocuSign user account all required notices, disclosures, authorizations, acknowledgements, and other documents that are required to be provided or made available to you during the course of our relationship with you. To reduce the chance of you inadvertently not receiving any notice or disclosure, we prefer to provide all of the required notices and disclosures to you by the same method and to the same address that you have given us. Thus, you can receive all the disclosures and notices electronically or in paper format through the paper mail delivery system. If you do not agree with this process, please let us know as described below. Please also see the paragraph immediately above that describes the consequences of your electing not to receive delivery of the notices and disclosures electronically from us.

How to contact City of McKinney:
You may contact us to let us know of your changes as to how we may contact you electronically, to request paper copies of certain information from us, and to withdraw your prior consent to receive notices and disclosures electronically as follows:
To contact us by email send messages to: dbates@mckinneytexas.org

To advise City of McKinney of your new e-mail address
To let us know of a change in your e-mail address where we should send notices and disclosures electronically to you, you must send an email message to us at dbates@mckinneytexas.org and in the body of such request you must state: your previous e-mail address, your new e-mail address. We do not require any other information from you to change your email address..
In addition, you must notify DocuSign, Inc to arrange for your new email address to be reflected in your DocuSign account by following the process for changing e-mail in DocuSign.

To request paper copies from City of McKinney
To request delivery from us of paper copies of the notices and disclosures previously provided by us to you electronically, you must send us an e-mail to dbates@mckinneytexas.org and in the body of such request you must state your e-mail address, full name, US Postal address, and telephone number. We will bill you for any fees at that time, if any.

To withdraw your consent with City of McKinney
To inform us that you no longer want to receive future notices and disclosures in electronic format you may:

i. decline to sign a document from within your DocuSign account, and on the subsequent page, select the check-box indicating you wish to withdraw your consent, or you may;
ii. send us an e-mail to dbates@mckinneytexas.org and in the body of such request you must state your e-mail, full name, IS Postal Address, telephone number, and account number. We do not need any other information from you to withdraw consent.. The consequences of your withdrawing consent for online documents will be that transactions may take a longer time to process..

Required hardware and software

Operating Systems:	Windows2000? or WindowsXP?
Browsers (for SENDERS):	Internet Explorer 6.0? or above
Browsers (for SIGNERS):	Internet Explorer 6.0?, Mozilla FireFox 1.0, NetScape 7.2 (or above)
Email:	Access to a valid email account
Screen Resolution:	800 x 600 minimum
Enabled Security Settings:	•Allow per session cookies •Users accessing the internet behind a Proxy Server must enable HTTP 1.1 settings via proxy connection

** These minimum requirements are subject to change. If these requirements change, we will provide you with an email message at the email address we have on file for you at that time providing you with the revised hardware and software requirements, at which time you will have the right to withdraw your consent.

Acknowledging your access and consent to receive materials electronically
To confirm to us that you can access this information electronically, which will be similar to other electronic notices and disclosures that we will provide to you, please verify that you were able to read this electronic disclosure and that you also were able to print on paper or electronically save this page for your future reference and access or that you were able to e-mail this disclosure and consent to an address where you will be able to print on paper or save it for your future reference and access. Further, if you consent to receiving notices and disclosures exclusively in electronic format on the terms and conditions described above, please let us know by clicking the 'I agree' button below.
By checking the 'I Agree' box, I confirm that:

- I can access and read this Electronic CONSENT TO ELECTRONIC RECEIPT OF ELECTRONIC RECORD AND SIGNATURE DISCLOSURES document; and

- I can print on paper the disclosure or save or send the disclosure to a place where I can print it, for future reference and access; and

- Until or unless I notify City of McKinney as described above, I consent to receive from exclusively through electronic means all notices, disclosures, authorizations, acknowledgements, and other documents that are required to be provided or made available to me by City of McKinney during the course of my relationship with you.

DENTON COUNTY TRANSPORTATION AUTHORITY
Salary, Wages & Benefits - Budget v. Actual 5-Year History

Description	FY 2017 Budget	FY 2017 Actuals	FY 2018 Budget	FY 2018 Actuals	DCTA FY 2019 Budget	DCTA FY 2019 Actuals	FY 2019 Budget (June-Sept 2019)	NTMC FY 2019 Actuals	Total FY 2019 Budget	Total FY 2019 Actuals	DCTA FY 2020 Working Budget	NTMC FY 2020 Working Budget	Total FY 2020 Working Budget	DCTA FY 2021 Proposed Budget	NTMC FY 2021 Proposed Budget	Total FY 2021 Proposed Budget
Salary & Wages	$ 8,092,485	$ 8,323,691	$ 9,198,754	$ 8,916,929	$ 7,679,667	$ 7,601,304	$ 2,023,816	$ 2,111,894	$ 9,703,483	$ 9,713,198	$ 3,485,136	$ 5,479,286	$ 8,964,422	$ 3,131,468	$ 4,667,626	$ 7,799,094
Benefits	2,827,844	2,102,290	2,703,518	2,220,684	2,607,469	2,080,421	650,326	574,074	3,257,795	2,654,495	1,174,598	2,052,096	3,226,694	1,061,743	1,979,019	3,040,762
	$ 10,920,329	$ 10,425,981	$ 11,902,272	$ 11,137,613	$ 10,287,136	$ 9,681,725	$ 2,674,142	$ 2,685,968	$ 12,961,278	$ 12,367,693	$ 4,659,734	$ 7,531,382	$ 12,191,116	$ 4,193,211	$ 6,646,645	$ 10,839,856
	(A)		(B)							(C)			(D)			(E)
Full Time Equivalent (FTE) - DCTA	*29.75*		*36.25*							*42.50*			*35.50*			*35.50*
	(F)		*(G)*							*(H)*			*(I)*			*(J)*
Full Time Equivalent (FTE) - TMDC/NTMC	*167.00*		*155.00*							*139.50*			*137.00*			*104.00*
	(K)		*(L)*							*(M)*			*(N)*			*(O)*

(A) FY17 Salaries, wages, and benefits increased $1.28 million from FY16 due to the addition of 23.5 FTEs as noted in (F) and (K) below; DCTA medical premiums increased 5%; TMDC medical premiums increased 3.5%

(B) FY18 Salaries, wages, and benefits increased $712k from FY17 due to the addition of 6.5 FTEs as noted in (G) below and an 11% increase in bus operations overtime prior to August 2018 service changes; DCTA medical premiums increased 2%

(C) FY19 Salaries, wages, and benefits increased $1.23 million from FY18 due to the addition of 6.25 FTEs as noted in (H) below; DCTA medical premiums increased 3%; $524k increase in bus operations salaries, wages, and employer taxes primarily due to bus operator wage rate increases outlined by the Union collective bargaining agreement (CBA) and a 19% increase in overtime hours; $217k increase in medical insurance expenses for bus operations due to increased enrollment and improved benefits as outlined in the CBA

(D) FY20 Working Budget Salaries, wages, and benefits decreased $177k from FY19 due to the reduction of 9.5 FTEs as noted in (I) and (N) below; DCTA medical premiums increased 2.7%; NTMC medical premiums increased an average 6.8%

(E) FY21 Proposed Budget Salaries, wages, and benefits decreased $1.35 million from FY20 Working Budget due to annualized savings from DCTA position eliminations noted in (I) below and reduction of 33 NTMC FTEs as noted in (O) below

Full Time Equivalent (FTE) - DCTA

(F) Net +2.5 FTEs: Addition of Grants Manager (previously performed by HR position), Business Manager of Bus Operations & Maintenance, Intern (0.5 FTE)

(G) Net +6.5 FTEs: Addition of Director of Strategic Partnerships, Business Manager of Bus Operations & Maintenance (2), Network Administrator, Director of Railway Systems, AVP of Regulatory Compliance; Conversion of Intern 0.5 FTE into Communications Coordinator 1.0 FTE

(H) Net +6.25 FTEs: Deletion of Chief Operating Officer position; Addition of Bus Operations Intern (0.5 FTE), Mobility as a Service Coordinator, Financial Analyst, and Receptionist; Conversion of Construction Inspector 0.75 FTE into Project Management Specialist 1.0 FTE; Conversion of Community Relations Intern 0.5 FTE into Community Relations Coordinator 1.0 FTE; Transfer of Operations Analysts (2) from TMDC/NTMC; Addition of Service Planner

(I) Net -7 FTEs: Addition of HR Assistant (0.5 FTE); Transfer of Procurement Specialist from NTMC budget; Elimination of 8.5 FTEs effective 5/1/2020: Community Relations Coordinator, Two Marketing Interns (1 FTE), VP of Operations, Manager of Mobility Services, Operations Analyst, Project Management Specialist, Service Planner, Bus Operations Intern (0.5 FTE), AVP of Rail Operations

(J) No changes from FY2020 working budget; position eliminations implemented in FY2020 assumed to remain in place for FY2021

Full Time Equivalent (FTE) - TMDC/NTMC

(K) Net +21 FTEs: Addition of Mechanics (4), Customer Service Rep (2) and Bus Operators (15 FTEs) to accomodate 31k increased service hours (launch of Connect Shuttle & Community On-Demand Pilot services in HV, implemented Comprehensive Operational Analysis recommendations in Lewisville, and launched North Texas Xpress)

(L) Net -12 FTEs: Reduction of Mechanics (2) and Bus Operators (10 FTEs) due to projected 19k decrease in service hours effective August 2018 (reduction of HV Connect Shuttle hours, introduced Lyft discount program that replaced HV Demand Response service and implemented Comprehensive Operational Analysis recommendations in Denton)

(M) Net -15.5 FTEs: Reduction of Bus Operators (12.5 FTEs) due to projected 29k decrease in service hours (discontinued Sam Bass route in fall 2018, consolidated Centre Place East & West to one route and improved operational efficiencies resulting in the need for fewer operators); Transfer of Operations Analysts (2) to DCTA; Deletion of Director of Customer Programs; Deletion of Finance Manager; Addition of General Manager (previously contracted position)

(N) Net -2.5 FTEs: Addition of Recruiter/HR Generalist; Conversion of Operations Specialist 0.5 FTE to full-time position 1.0 FTE; Reduction of Bus Operators (3 FTEs) due to a reduction in service hours from service changes made in March and May 2020; Deletion of General Manager position (moving to a contracted position)

(O) Net -33 FTEs: Reduction of Bus Operators (33 FTEs) due to 70k decreased service hours as a result of service reductions implemented during COVID-19

Lewisville Lakeway Zone + Lyft Ridership and Cost Data

PER BOARD REQUEST

JULY 23, 2020

Lakeway Zone Ridership*

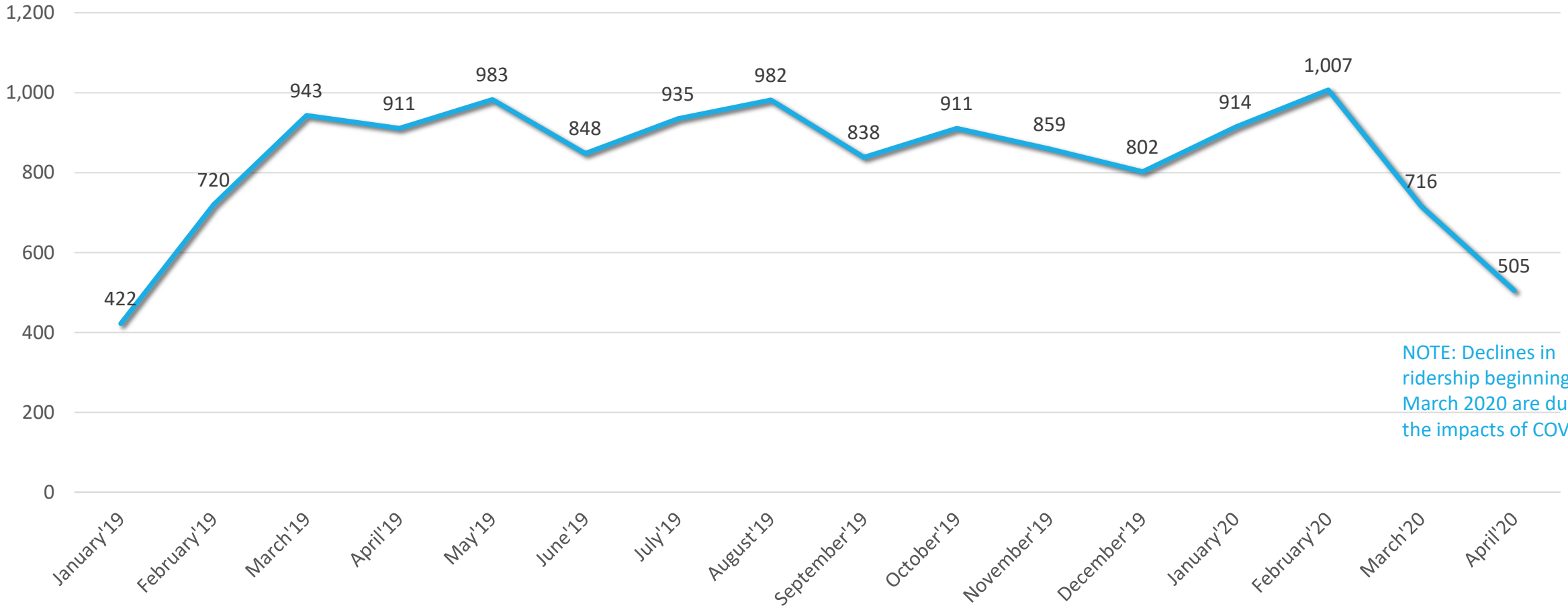

NOTE: Declines in ridership beginning in March 2020 are due to the impacts of COVID-19

**Lakeway service first began in January 2019*

Lakeway Zone Average Monthly Cost*

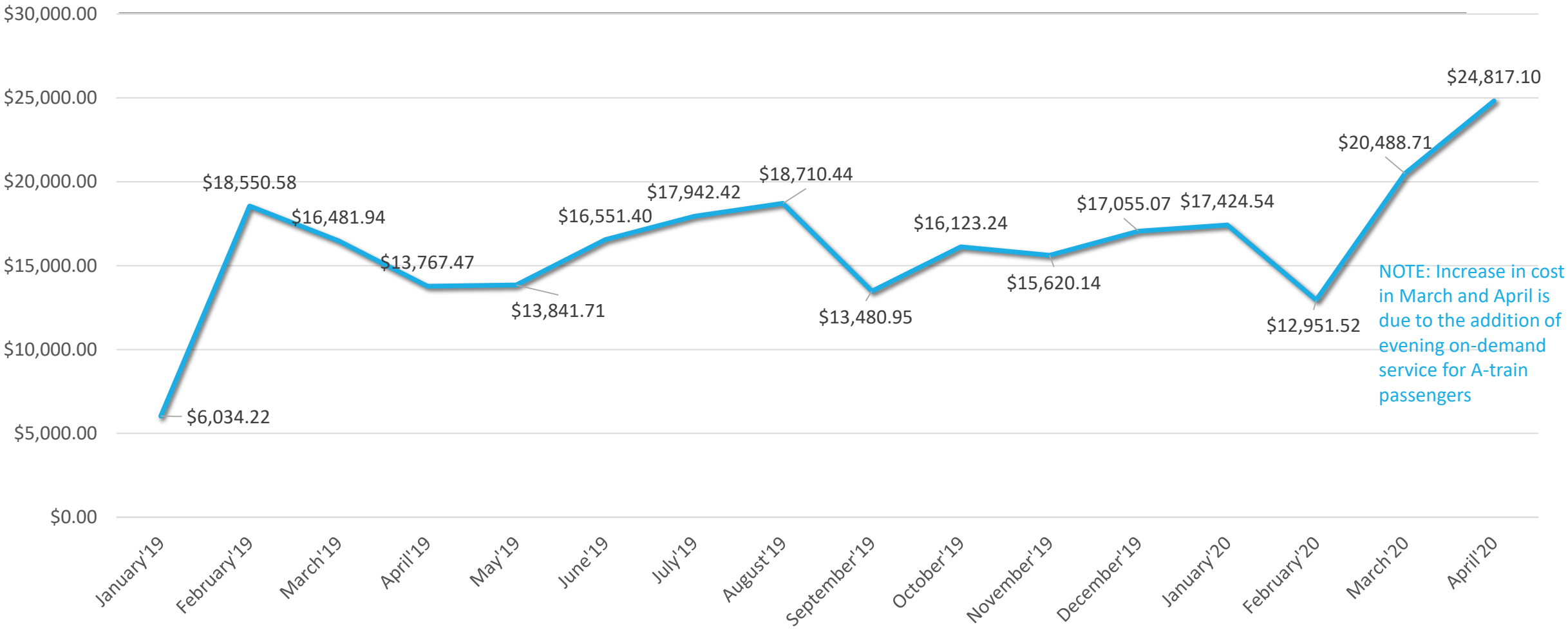

NOTE: Increase in cost in March and April is due to the addition of evening on-demand service for A-train passengers

**Cost shown reflects direct costs only (labor + fuel). Cost not representative of a fully allocated cost (i.e. admin overhead, software, etc.).*

Monthly Cost Compared to Ridership

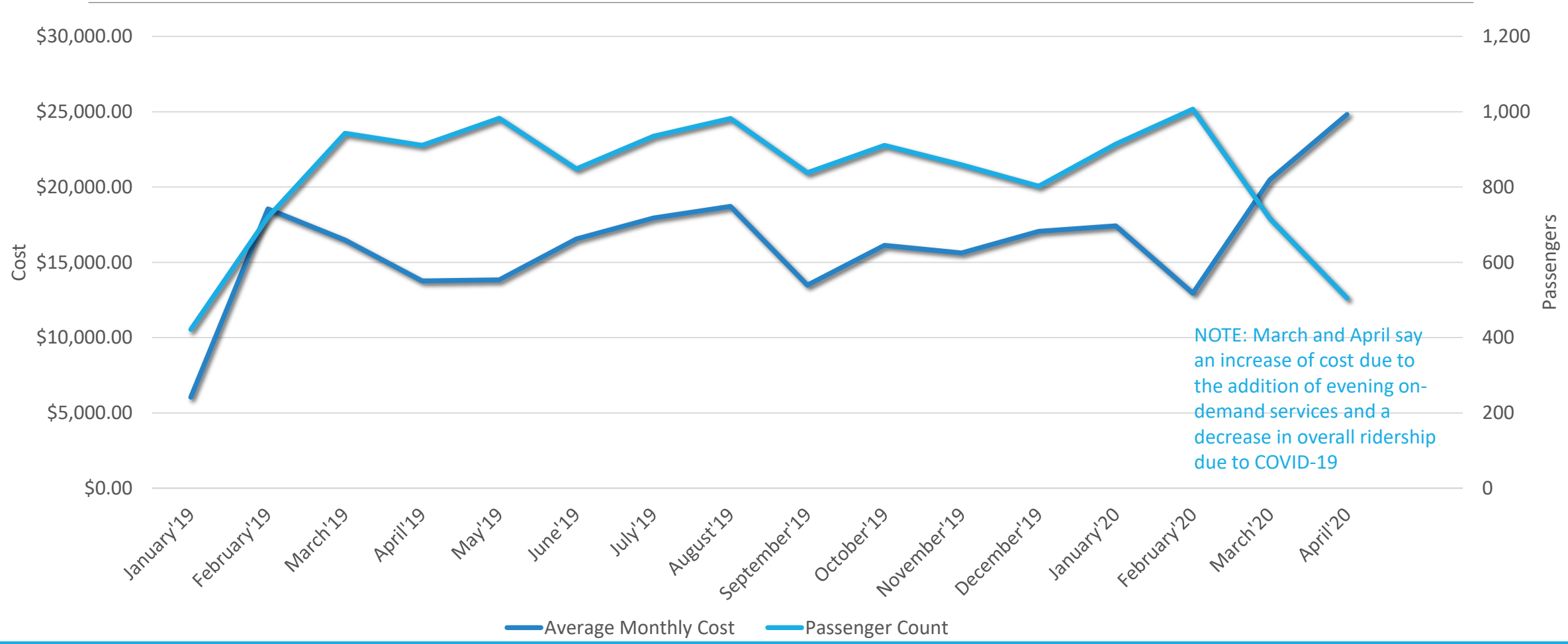

Lakeway Zone Cost Per Passenger

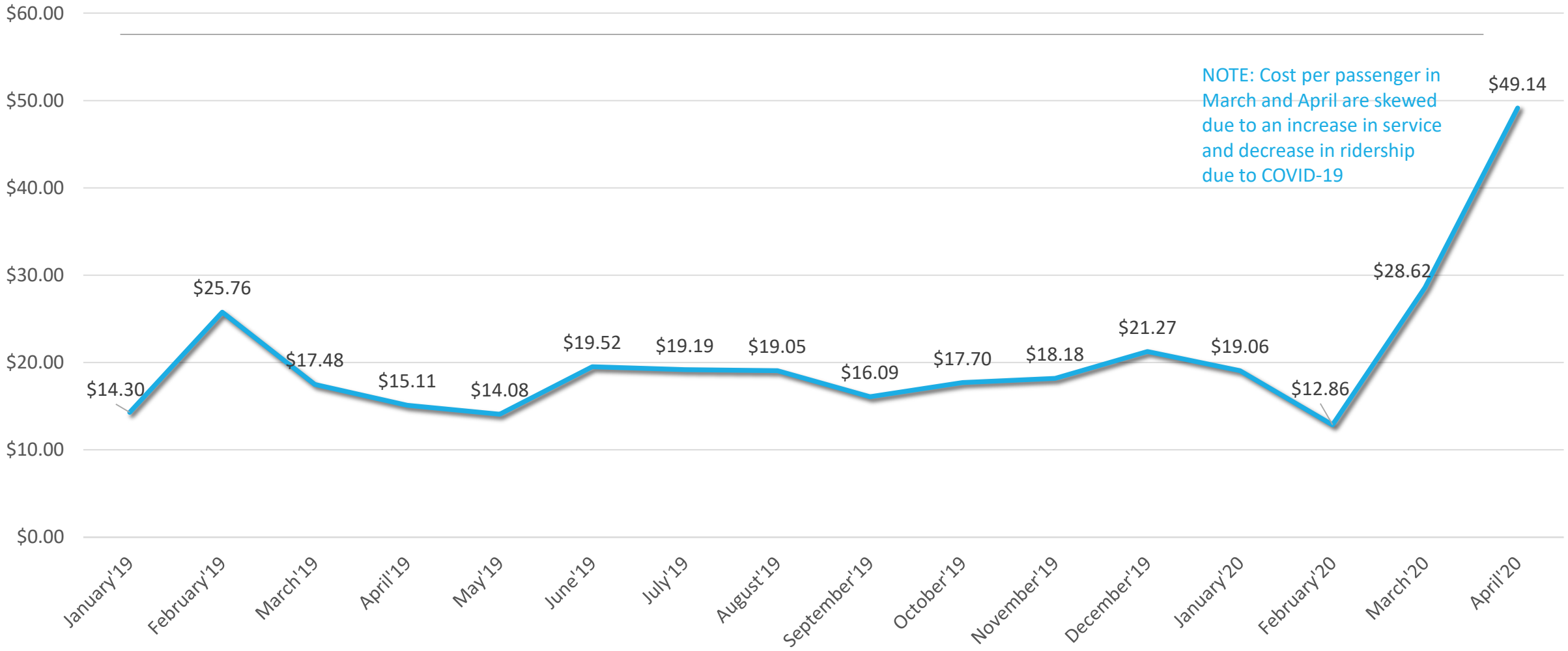

Cost per Passenger Compared to Ridership

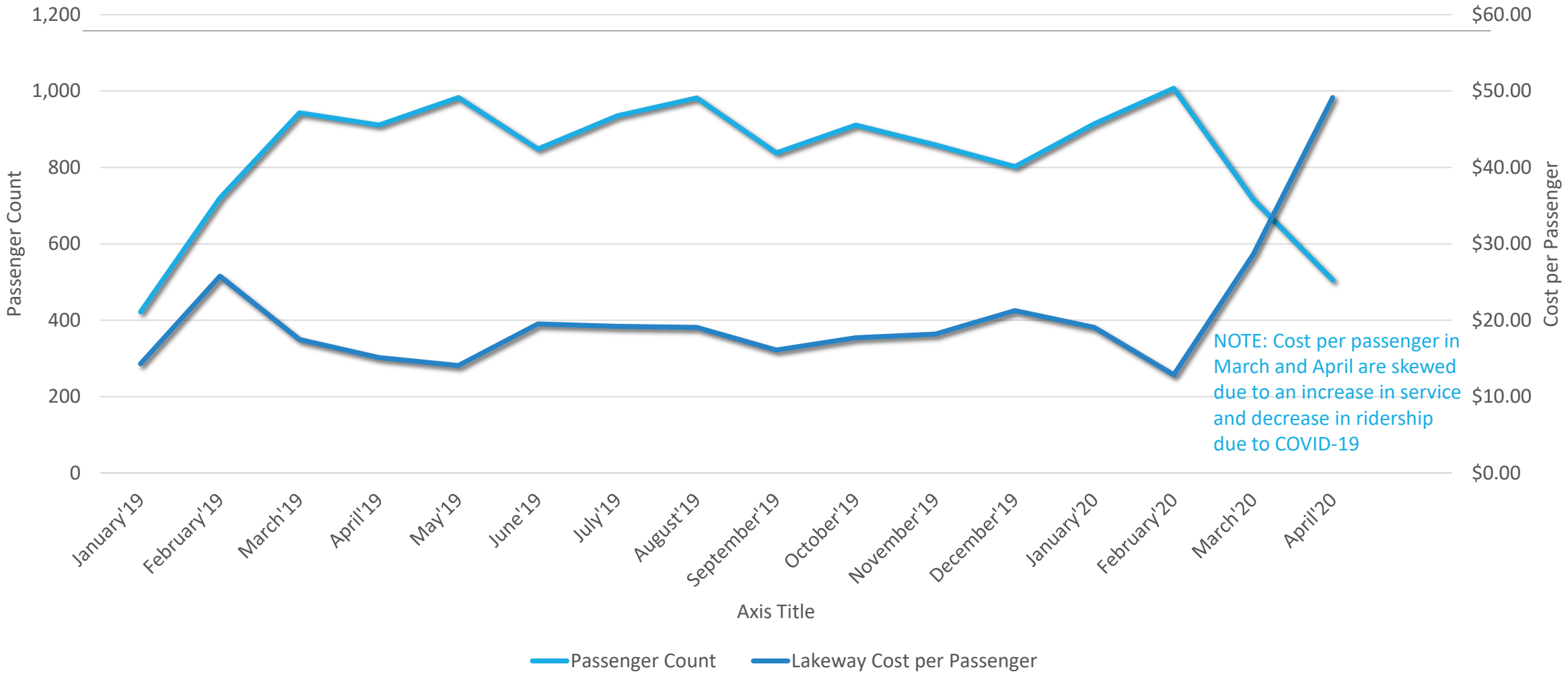

Evening On-Demand Service Ridership

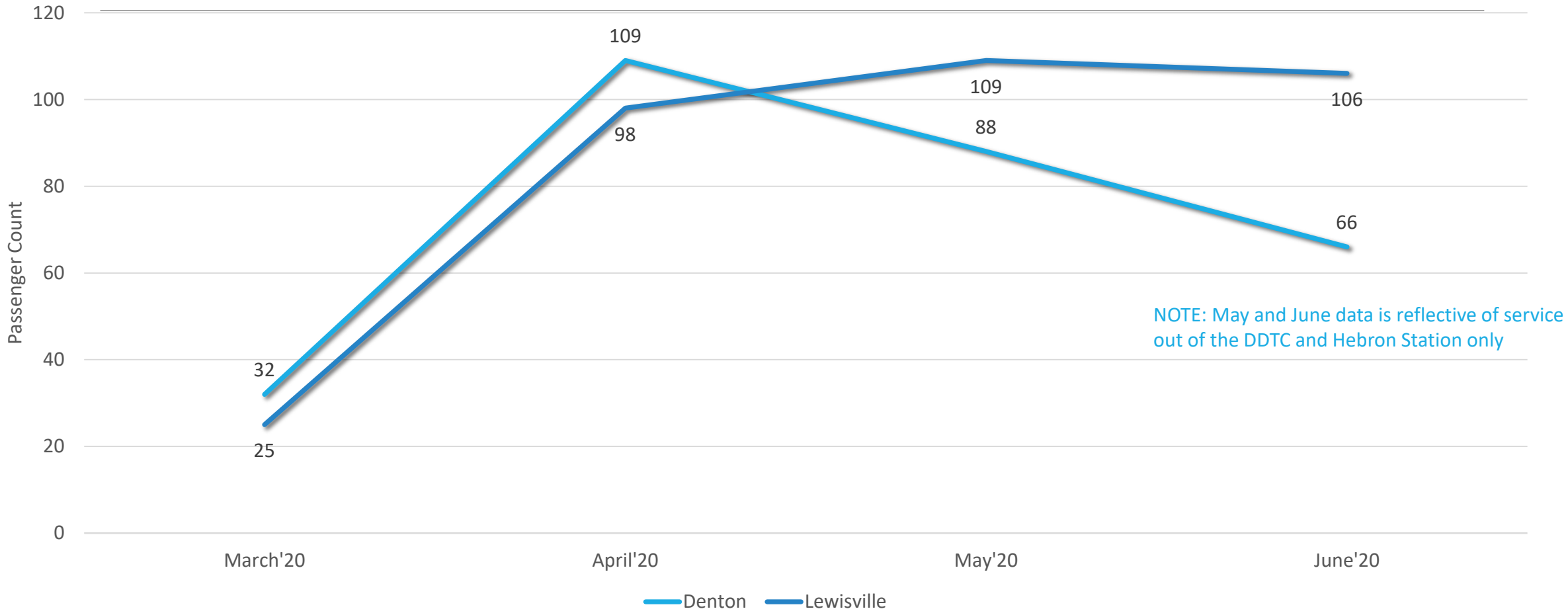

NOTE: May and June data is reflective of service out of the DDTC and Hebron Station only

**Denton includes service out of the DDTC and MedPark. Lewisville includes service out of Old Town and Hebron. In May, service from MedPark and Old Town was removed.*

Denton Evening On-Demand Service
(Monthly Cost)

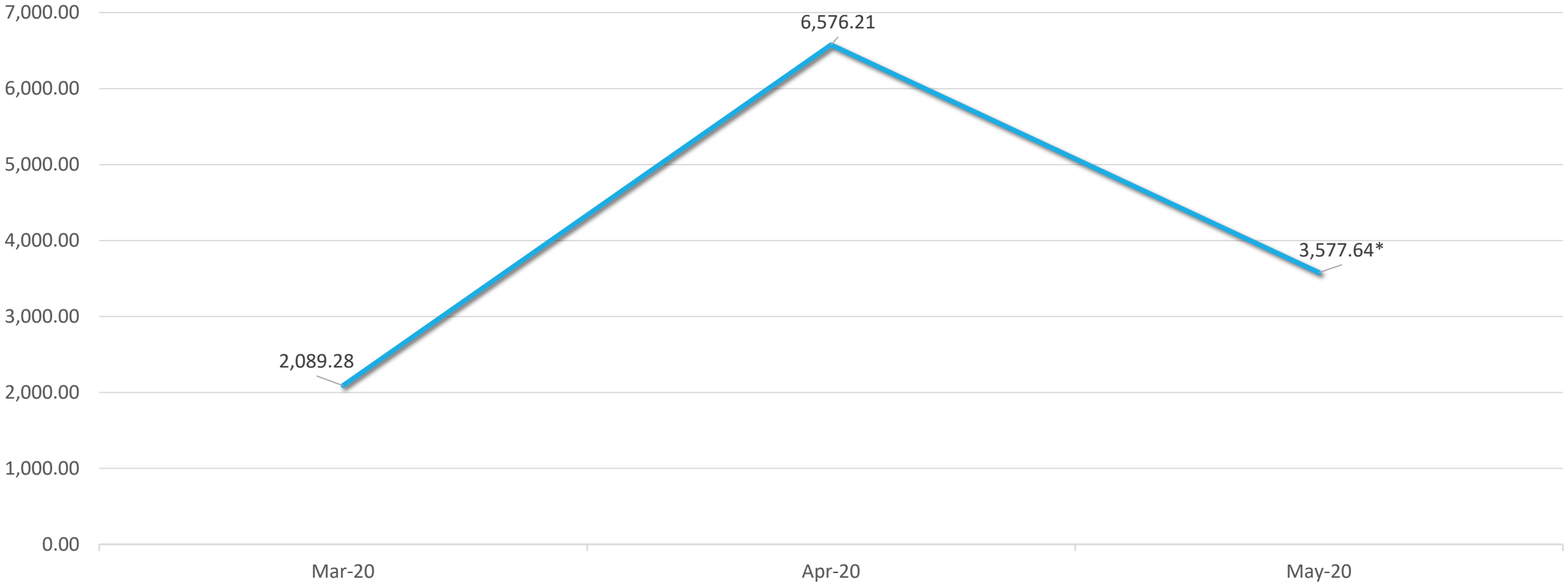

**On May 11, service was removed from MedPark, causing a decrease in cost. Louisville cost can be referenced in 'Slide 3.'*

Average Lyft Fare*

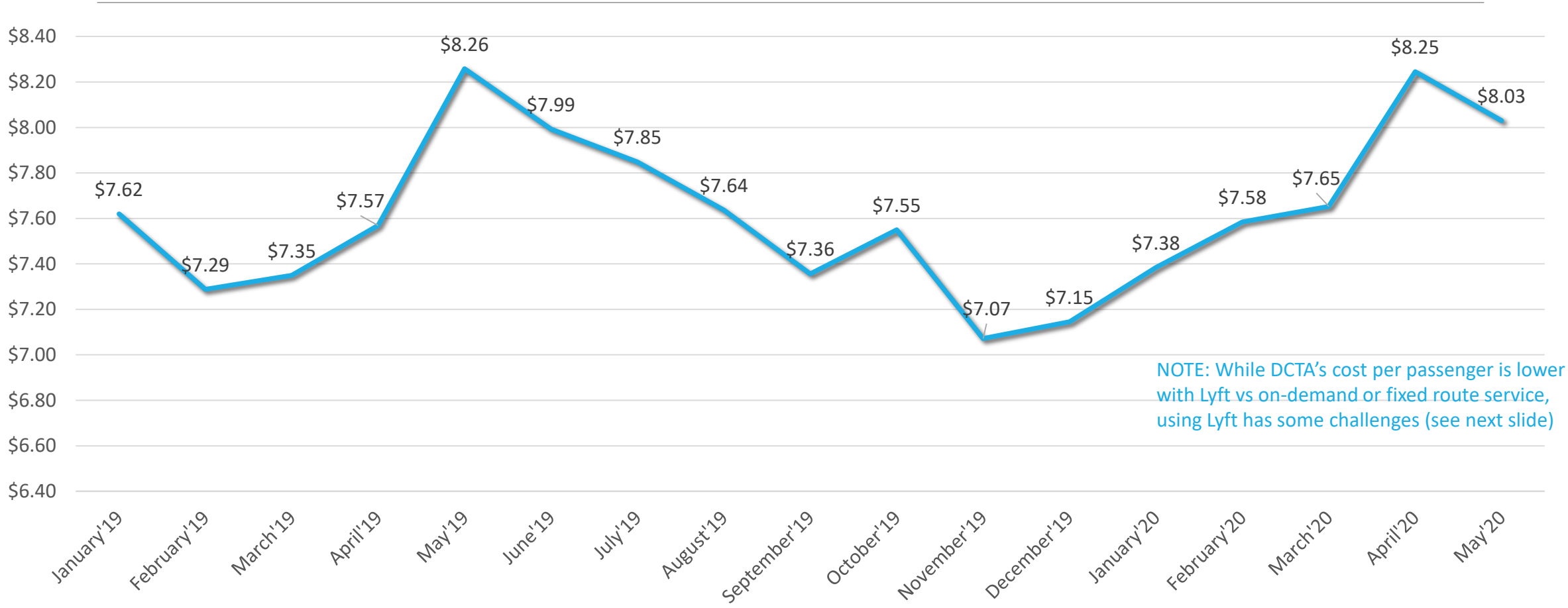

NOTE: While DCTA's cost per passenger is lower with Lyft vs on-demand or fixed route service, using Lyft has some challenges (see next slide)

**Lyft numbers used are from the Highland Village Lyft Service as it has the most comparable service area.*

Challenges with Using Lyft

PASSENGER NEEDS

- Cannot accommodate wheelchair passengers
- No ability to transport bicycles on economy rides

FARE MEDIA

- Not compatible with Day Pass fare system for people transferring from the A-train

FUNDING

- Lyft trips cannot be reimbursed using federal funds

FINANCIAL PROCESSES

- Lyft is unwilling to submit invoices by our month end due date, which results in pushing back our financial processes

TECHNOLOGY

- No white label offered (making the app look like a DCTA app)

DATA

- No analytics/KPIs
- Limited raw data
- No real time or current time data (limited ridership reporting provided 1.5 months in arrears)
- Ridership reports not have dates or times

CUSTOMER SERVICE

- No training available to our NTMC or DCTA staff
- Delay in response time

A-train Ridership and I-35E Construction Impacts

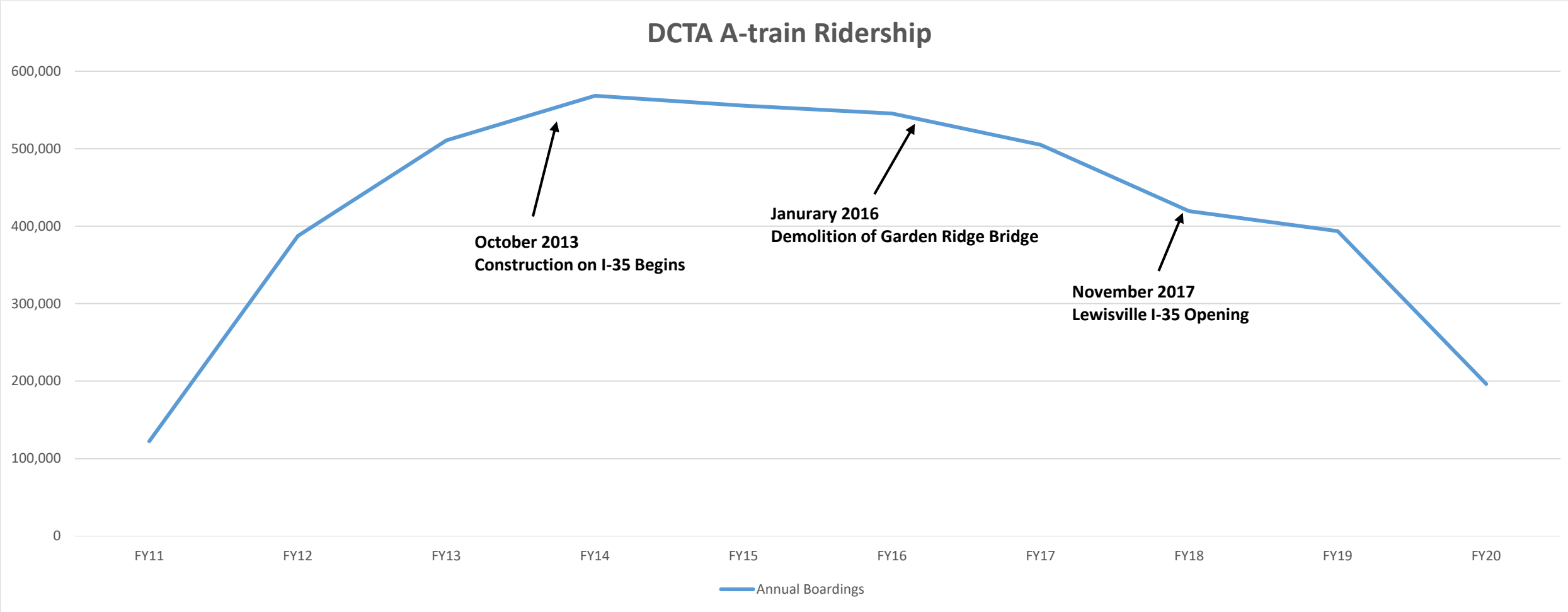

Board of Directors Memo July 23, 2020

SUBJECT: Consider Approval of Resolution R20-12 Extending COVID-19 Service Levels on Bus and Rail, Approving Modifications to Evening On-Demand Service, and Adoption of University of North Texas (UNT) Fall 2020 Semester Service Levels Through January 2021

Background

Due to COVID-19, stay-at-home orders and state-wide disaster declarations, DCTA experienced ridership declines across the system. In response to this health disaster, DCTA implemented temporary system-wide service modifications on March 23, 2020 and May 11, 2020.

Identified Need

Initially, service modifications were made due to the impacts of COVID-19. Staff has continued to monitor ridership as well as state and local COVID-19 response to adjust service delivery as needed.

Staff is recommending the extension of the existing COVID-19 service levels on fixed route and rail, modifications to evening on-demand services, and adoption of UNT Fall 2020 semester service.

These service level would be effective through January 2021, in order to:

- Collect findings from the following efforts:
  - Routine Ridership Reports
  - MaaS Task Order #2: On-Demand Service for Member Cities
  - Transformation Initiative
  - UNT Spring Semester Needs
  - Monitor workforce business model trends
  - Monitor school district COVID-19 plans
- Allow administrative time for planning and implementation, including:
  - Review ridership trends
  - Conduct an operator bid in accordance with the CBA
  - Conduct any recruitment necessary to support the service modification

Additionally, the FY '20 revised budget and FY '21 proposed budget reflects the recommended service levels. Future modifications to service will require amendments to the appropriate budgets.

Board Review

The DCTA Board of Directors has been briefed on COVID-19 service modifications during the following board meetings:

- March 26, 2020 – DCTA Board Meeting
- April 23, 2020 – DCTA Board Meeting
- May 27, 2020 – DCTA Board Meeting
- June 18, 2020 – DCTA Budget Workshop
- June 25, 2020 – DCTA Board Meeting

Financial Impact

The FY '20 revised budget and FY '21 proposed budget reflects the recommended service levels. Future modifications to service will require amendments to the appropriate budgets.

Recommendation

DCTA staff is recommending approval of the following through January 2021:

- Extension of existing COVID-19 service levels on fixed route and rail
- Modifications of evening on-demand service out of A-train stations (effective August 24, 2020)
- UNT Fall 2020 semester service levels (effective August 24, 2020)

Staff will continue to report monthly ridership to the Board of Directors and facilitate conversations regarding future service levels.

Exhibits

Exhibit 1: Resolution R20-12 Extending COVID-19 Service Levels on Bus and Rail, Approving Modifications to Evening On-Demand Service, and Adoption of University of North Texas (UNT) Fall 2020 Semester Service Levels Through January 2021
Exhibit 2: COVID-19 Service Modification Historical Timeline
Exhibit 3: Service Level Overview
Exhibit 4: June 2020 Public Involvement and Title VI Analysis Report

Submitted By: _____
Nicole Recker, VP of Mobility Services and Administration

Reviewed By: _____
Kristina Holcomb, Deputy CEO

Approval: _____
Raymond Suarez, CEO

DENTON COUNTY TRANSPORTATION AUTHORITY
RESOLUTION NO. R20-12

A RESOLUTION OF THE BOARD OF DIRECTORS OF THE DENTON COUNTY TRANSPORTATION AUTHORITY (DCTA) EXTENDING COVID-19 SERVICE LEVELS ON BUS AND RAIL, APPROVING MODIFICATIONS TO EVENING ON-DEMAND SERVICE, AND ADOPTION OF UNIVERSITY OF NORTH TEXAS (UNT) FALL 2020 SEMESTER SERVICE LEVELS THROUGH JANUARY 2021; PROVIDING A REPEALING CLAUSE AND PROVIDING AN EFFECTIVE DATE.

WHEREAS, DCTA has experienced ridership declines across its system as a result of COVID-19 stay-at-home orders and the state-wide disaster declaration; and

WHEREAS, DCTA implanted temporary system wide service modifications on March 23, 2020 and May 11, 2020; and

WHEREAS, staff will continue to monitor ridership and state and local COVID-19 response to adjust service delivery as necessary; and

NOW, THEREFORE, BE IT RESOLVED BY THE BOARD OF DIRECTORS OF THE DENTON COUNTY TRANSPORTATION AUTHORITY, THAT:

SECTION 1. The Board of Directors approves the following through January 2021:

- Extension of existing COVID-19 service levels on bus and rail;
- Modification of evening on-demand service out of A-train stations; and
- Adoption of UNT Fall 2020 semester service levels.

SECTION 2. All provisions of the resolutions of the DCTA Board of Directors in conflict with the provisions of this Resolution be, and the same are hereby, repealed, and all other provisions not in conflict with the provisions of this Resolution shall remain in full force and effect.

SECTION 3. This Resolution shall become effective immediately upon its passage and approval.

DULY PASSED AND APPROVED BY THE BOARD OF DIRECTORS OF THE DENTON COUNTY TRANSPORTATION AUTHORITY THE 23RD DAY OF JULY, 2020.

APPROVED:

Dianne Costa, Chair

ATTEST:

Sam Burke, Secretary
(07-16-2020:TM 116802)

COVID-19 SERVICE MODIFICATION HISTORY

Service Modification History

March 13, 2020

- Texas Governor Disaster Declaration Issued

March 23, 2020

- Reduced service levels and modifications implemented on bus, rail and UNT

March 24, 2020

- Denton County Stay-At-Home Order Issued

March 26, 2020 (Board of Directors Meeting)

- Board discussion of service modifications (Regular Agenda Item 1: Coronavirus (COVID-19) Response Update Regarding DCTA Operations Service Modifications & Staffing)
- Discussed frequency reductions in response to COVID-19

Service Modification History

April 23, 2020 (Board of Directors Meeting)

- Board discussion of service modifications (Regular Agenda Item 1: Suspension of Service)
- Discussed temporary removal of Routes 5 and 8 (use Routes 6 and 7 as replacements)

May 11, 2020

- Bus service modifications implemented

May 27, 2020 (Board of Directors Meeting)

- Board discussion of service modifications
  - Regular Agenda Item 1: Coronavirus (COVID-19) Response Update Regarding DCTA Operations Service Modifications & Staffing
  - Regular Agenda Item 4: Consider Approval of Resolution R20-04 Approving FY20 Budget Amendment
- Discussed continuation of service modifications during emergency pandemic, resulting in an FY '20 budget amendment

Service Modification History

June 18, 2020 (Budget Workshop)

- Board discussion of FY '21 service modifications
- Discussion of continuation of COVID-19 service levels, resulting in additional cash at bottom line
- Use of additional cash for future service levels, on-demand service and/or recommendations from the Transformation Initiative

June 25, 2020 (Board of Directors Meeting)

- Board discussion of service modifications
  - Regular Agenda Item 1: Coronavirus (COVID-19) Response Update
  - Regular Agenda Item 7: August Service Change Overview
- Discussion of continued service modifications due to COVID, the public involvement process, Title VI Analysis, and the July request for board approval
- Staff will include additional data with the July board materials to assist with board decision

July 23, 2020 (Board of Directors Meeting)

- Board discussion of service modifications (recommending approval)

DCTA Service Modification History

Service	March 23 Changes	May 11 Changes	August 24 Changes
Route 1	Saturday schedule with 60-minute frequency; additional AM run	Continued	Continue Existing Service Levels
Route 2	Saturday schedule with 60-minute frequency; additional AM run	Continued	Continue Existing Service Levels
Route 3	Saturday schedule with 60-minute frequency; additional AM run	Continued	Continue Existing Service Levels
Route 4	Saturday schedule with 60-minute frequency; additional AM run	Continued	Continue Existing Service Levels
Route 5	Saturday schedule with 60-minute frequency; additional AM run	Suspended Service	Continue Suspension of Service
Route 6	Saturday schedule with 60-minute frequency; additional AM run	Continued	Continue Existing Service Levels
Route 7	Saturday schedule with 60-minute frequency; additional AM run	Continued	Continue Existing Service Levels
Route 8	Saturday schedule with 60-minute frequency; additional AM run	Suspended Service	Continue Suspension of Service
Route 21	Saturday schedule with 60-minute frequency; additional AM run	Continued	Continue Existing Service Levels
Route 22	Saturday schedule with 60-minute frequency; additional AM run	Continued	Continue Existing Service Levels
Highland Village Connect Shuttle	Discontinued of service	N/A	N/A
A-train	A-train service provided hourly Monday through Friday from 6 a.m. to 9 p.m.; Saturday service will remain the same	Continued	Continue Existing Service Levels
DDTC Evening On-Demand Service	Launched evening service	Continued	Continue Existing Service Levels
MedPark Evening On-Demand Service	Launched evening service	Discontinued	N/A
Old Town Evening On-Demand Service	Launched evening service	Discontinued	N/A
Hebron Evening On-Demand Service	Launched evening service	Continued	Discontinued

UNT Service Modification History

Service	Pre-COVID Service	March 23 Changes	May 11 Changes	August 24 Changes
Parking Express Union (PEU)	N/A	N/A	N/A	30-minute frequency
Parking Express Victory Hall (PEVH)	N/A	N/A	N/A	30-minute frequency
Mean Green (MG)	10-minute frequency	Suspended Service	23-minute frequency	25-minute frequency
North Texan (NT)	13-minute frequency	25-minute frequency	25-minute frequency	11-minute frequency
Eagle Point (EP)	20-minute frequency	40-minute frequency	Suspended Service	35-minute frequency
Colorado Express (CE)	25-minute frequency	55-minute frequency	55-minute frequency	22-minute frequency
Centre Place (CP)	7-minute frequency	30-minute frequency	30-minute frequency	10-minute frequency
Discovery Park (DP)	15-minute frequency	60-minute frequency	40-minute frequency	10-minute frequency
Bernard Street (BST)	7-minute frequency	20-minute frequency	20-minute frequency	10-minute frequency
Mean Green Night Rider (MGNR)	14-minute frequency	30-minute frequency	Suspended Service	30-minute frequency
Mean Green Night Rider Plus (MGNR-LN)	30-minute frequency	30-minute frequency	Suspended Service	30-minute frequency

Note: All service modifications dictated by UNT and on-campus activities

DCTA DENTON COUNTY TRANSPORTATION AUTHORITY

SERVICE LEVEL OVERVIEW

DCTA Board of Directors Meeting – July 23, 2020

STAFF RECOMMENDATION

Staff Recommendation

- Approve the following:
  - Extension of existing COVID-19 service levels on bus and rail through January 2021
  - Modifications of evening on-demand service out of A-train stations
  - UNT Fall 2020 semester service levels
- Monitor state and local mandates related to COVID-19 (ex. business closures, school schedules, etc.)
- Staff will continue to report monthly ridership to the Board of Directors and facilitate conversations regarding future service levels
- Collect findings from the following to inform January service modifications:
  - MaaS Task Order #2: On-Demand Service for Member Cities
  - Transformation Initiative
  - UNT Spring Semester Needs
  - Monitor workforce business model trends
  - Monitor school district COVID-19 plans
- January 2021 service change timing allows staff to:
  - Collect findings from several sources
  - Review ridership trends
  - Conduct a bus operator bid in accordance with the CBA
  - Conduct any operations front-line staff recruitment necessary to support the service modification
- NOTE: Increased bus service levels requiring a small vehicle may be impacted by the delay in purchase and delivery of Arboc Spirit of Independence vehicles

A-TRAIN SERVICE

A-train

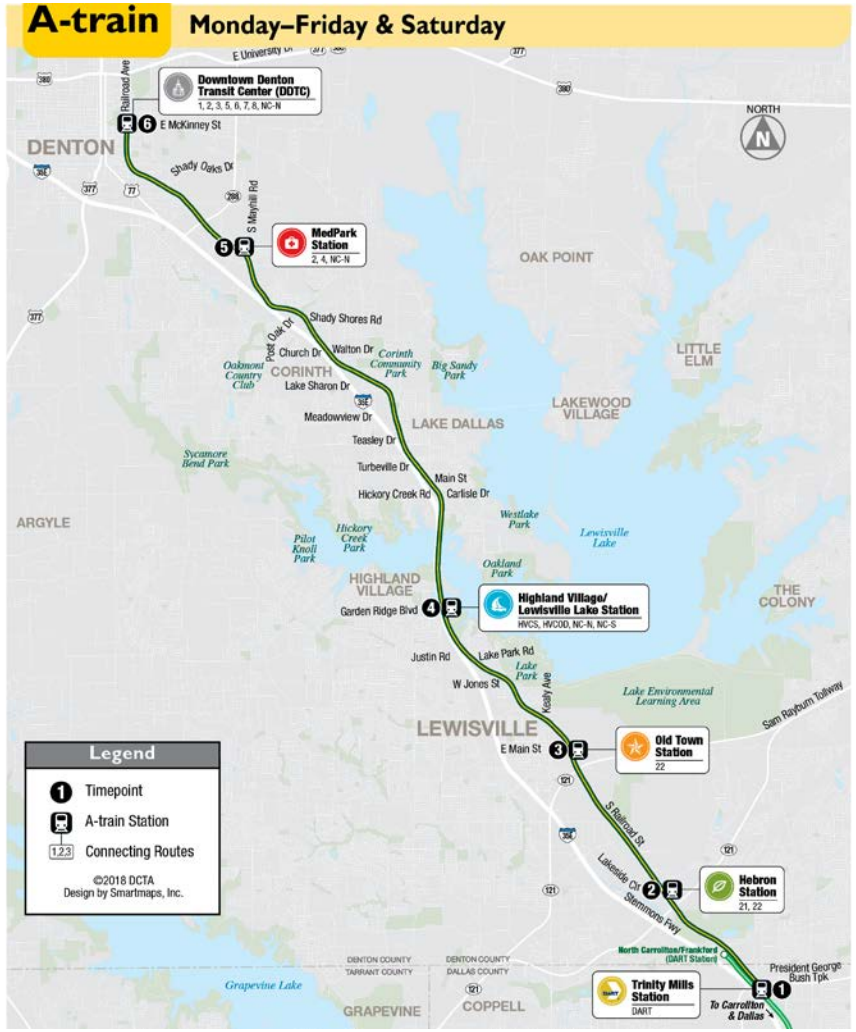

Pre-COVID Schedule *(prior to March 23, 2020)*

30 minute frequency all day M-F; 60 minute frequency Saturday

A-train Schedule: Monday-Friday / Horario de A-train: Lunes-Viernes

Northbound / Dirección Norte

	Train #	Green Line (Arrives) ID: 29816	Trinity Mills Station ID: 770397	Hebron Station ID: 770396	Old Town Station ID: 770395	Highland Village Station ID: 770394	MedPark Station ID: 770393	DDTC (Arrives) ID: 770001
		1	1	2	3	4	5	6
AM	5302	–	–	–	4:10	4:18	4:34	4:41
AM	5304	–	–	–	4:40	4:48	5:04	5:11
AM	5306	–	–	–	5:10	5:18	5:34	5:41
AM	5908	5:00	5:27	5:33	5:40	5:48	6:04	6:11
AM	5910	5:55	5:57	6:03	6:10	6:18	6:34	6:41
AM	5912	6:18	6:27	6:33	6:40	6:48	7:04	7:11
AM	5914	6:43	6:57	7:03	7:10	7:18	7:34	7:41
AM	5916	7:18	7:27	7:33	7:40	7:48	8:04	8:11
AM	5918	7:48	7:57	8:03	8:10	8:18	8:34	8:41
AM	5920	8:18	8:27	8:33	8:40	8:48	9:04	9:11
AM	5922	8:48	8:57	9:03	9:10	9:18	9:34	9:41
AM	5924	9:18	9:27	9:33	9:40	9:48	10:04	10:11
AM	5926	9:46	9:57	10:03	10:10	10:18	10:34	10:41
AM	5928	10:24	10:27	10:33	10:40	10:48	11:04	11:11
AM	5930	10:44	10:57	11:03	11:10	11:18	11:34	11:41
AM	5932	11:24	11:27	11:33	11:40	11:48	**12:04**	**12:11**
AM	5934	11:44	11:57	**12:03**	**12:10**	**12:18**	12:34	**12:41**
AM	5936	**12:24**	**12:27**	12:33	**12:40**	**12:48**	**1:04**	**1:11**
AM	5938	**12:44**	**12:57**	**1:03**	**1:10**	**1:18**	**1:34**	**1:41**
PM	5340	–	–	–	**1:40**	**1:50**	**2:09**	**2:16**
PM	5942	**1:44**	**2:02**	**2:08**	**2:15**	**2:23**	**2:39**	**2:46**
PM	5944	**2:24**	**2:32**	**2:38**	**2:45**	**2:53**	**3:09**	**3:16**
PM	5946	**2:44**	**3:02**	**3:08**	**3:15**	**3:23**	**3:39**	**3:46**
PM	5948	**3:24**	**3:32**	**3:38**	**3:45**	**3:53**	**4:09**	**4:16**
PM	5950	**3:55**	**4:02**	**4:08**	**4:15**	**4:23**	**4:39**	**4:46**
PM	5952	**4:24**	**4:32**	**4:38**	**4:45**	**4:53**	**5:09**	**5:16**
PM	5954	**4:59**	**5:02**	**5:08**	**5:15**	**5:23**	**5:39**	**5:46**
PM	5956	**5:29**	**5:32**	**5:38**	**5:45**	**5:53**	**6:09**	**6:16**
PM	5958	**5:59**	**6:02**	**6:08**	**6:15**	**6:23**	**6:39**	**6:46**
PM	5960	**6:29**	**6:32**	**6:38**	**6:45**	**6:53**	**7:09**	**7:16**
PM	5962	**6:44**	**7:02**	**7:08**	**7:15**	**7:23**	**7:39**	**7:46**
PM	5964	**7:24**	**7:32**	**7:38**	**7:45**	**7:53**	**8:09**	**8:16**
PM	5966	**7:44**	**8:02**	**8:08**	**8:15**	**8:23**	**8:39**	**8:46**
PM	5968	**8:24**	**8:32**	**8:38**	**8:45**	**8:53**	**9:09**	**9:16**
PM	5970	**10:24**	**10:32**	**10:38**	**10:45**	**10:53**	**11:09**	**11:16**

Friday only

A-train Schedule: Monday-Friday / Horario de A-train: Lunes-Viernes

Southbound / Hacia el Sur

	Train #	DDTC (Departs) ID: 770001	MedPark Station ID: 770393	Highland Village Station ID: 770394	Old Town Station ID: 770395	Hebron Station ID: 770396	Trinity Mills Station ID: 770397	Green Line (Departs) ID: 29816
		6	5	4	3	2	1	1
AM	5901	4:56	5:02	5:18	5:25	5:31	5:38	5:43
AM	5903	5:26	5:32	5:48	5:55	6:01	6:08	6:13
AM	5905	5:56	6:02	6:18	6:25	6:31	6:38	6:43
AM	5907	6:26	6:32	6:48	6:55	7:01	7:08	7:14
AM	5909	6:56	7:02	7:18	7:25	7:31	7:38	7:43
AM	5911	7:26	7:32	7:48	7:55	8:01	8:08	8:16
AM	5913	7:56	8:02	8:18	8:25	8:31	8:38	8:50
AM	5915	8:26	8:32	8:48	8:55	9:01	9:08	9:10
AM	5917	8:56	9:02	9:18	9:25	9:31	9:38	9:50
AM	5919	9:26	9:32	9:48	9:55	10:01	10:08	10:10
AM	5921	9:56	10:02	10:18	10:25	10:31	10:38	10:50
AM	5923	10:26	10:32	10:48	10:55	11:01	11:08	11:10
AM	5925	10:56	11:02	11:18	11:25	11:31	11:38	11:50
AM	5927	11:26	11:32	11:48	11:55	**12:01**	**12:08**	**12:10**
AM	5929	11:56	**12:02**	**12:18**	**12:25**	**12:31**	**12:38**	**12:50**
PM	5931	**12:26**	**12:32**	**12:48**	**12:55**	**1:01**	**1:08**	**1:10**
PM	5933	**12:56**	**1:02**	**1:18**	**1:25**	**1:31**	**1:38**	**1:50**
PM	5935	**1:26**	**1:32**	**1:50**	**1:59**	**2:08**	**2:15**	**2:30**
PM	5937	**2:01**	**2:07**	**2:23**	**2:30**	**2:36**	**2:43**	**2:50**
PM	5939	**2:31**	**2:37**	**2:53**	**3:00**	**3:06**	**3:13**	**3:28**
PM	5941	**3:01**	**3:07**	**3:23**	**3:30**	**3:36**	**3:43**	**3:56**
PM	5943	**3:31**	**3:37**	**3:53**	**4:00**	**4:06**	**4:13**	**4:26**
PM	5945	**4:01**	**4:07**	**4:23**	**4:30**	**4:36**	**4:43**	**4:56**
PM	5947	**4:31**	**4:37**	**4:53**	**5:00**	**5:06**	**5:13**	**5:30**
PM	5949	**5:01**	**5:07**	**5:23**	**5:30**	**5:36**	**5:43**	**5:48**
PM	5951	**5:31**	**5:37**	**5:53**	**6:00**	**6:06**	**6:13**	**6:30**
PM	5953	**6:01**	**6:07**	**6:23**	**6:30**	**6:36**	**6:43**	**6:50**
PM	5955	**6:31**	**6:37**	**6:53**	**7:00**	**7:06**	**7:13**	**7:30**
PM	5957	**7:01**	**7:07**	**7:23**	**7:30**	**7:36**	**7:43**	**7:50**
PM	5959	**7:31**	**7:37**	**7:53**	**8:00**	**8:06**	**8:13**	**8:30**
PM	5961	**8:01**	**8:07**	**8:23**	**8:30**	**8:36**	**8:43**	**8:50**
PM	5963	**8:31**	**8:37**	**8:53**	**9:00**	**9:06**	**9:13**	**9:30**
PM	5965	**9:01**	**9:07**	**9:23**	**9:30**	**9:36**	**9:43**	**9:57**
PM	5967	**9:31**	**9:37**	**9:53**	**10:00**	**10:06**	**10:13**	**10:27**
PM	5969*	**11:31**	**11:37**	**11:53**	12:00	12:06	12:13	12:29*

Friday only * 5969 Green Line train will terminate at Walnut Hill/Denton Station. Visit **dart.org** for full DART schedule.

A-train Schedule: Saturday / Horario de A-train: Sábado

Northbound / Dirección Norte

	Train #	Green Line (Arrives) ID: 29816	Trinity Mills Station ID: 770397	Hebron Station ID: 770396	Old Town Station ID: 770395	Highland Village Station ID: 770394	MedPark Station ID: 770393	DDTC (Arrives) ID: 770001
		1	1	2	3	4	5	6
AM	5374	–	–	–	7:30	7:36	7:52	7:58
AM	5976	9:15	9:20	9:26	9:31	9:37	9:53	9:59
AM	5978	11:05	11:10	11:16	11:21	11:27	11:43	11:49
PM	5980	**12:45**	**1:00**	**1:06**	**1:11**	**1:17**	**1:33**	**1:39**
PM	5982	**2:45**	**2:50**	**2:56**	**3:01**	**3:07**	**3:23**	**3:29**
PM	5984	**4:45**	**4:50**	**4:56**	**5:01**	**5:07**	**5:23**	**5:29**
PM	5986	**6:45**	**6:50**	**6:56**	**7:01**	**7:07**	**7:23**	**7:29**
PM	5988	**8:42**	**8:45**	**8:51**	**8:56**	**9:02**	**9:18**	**9:24**
PM	5990	**10:42**	**10:45**	**10:51**	**10:56**	**11:02**	**11:18**	**11:24**

AUGUST 2019

A-train Schedule: Saturday / Horario de A-train: Sábado

Southbound / Hacia el Sur

	Train #	DDTC (Departs) ID: 770001	MedPark Station ID: 770393	Highland Village Station ID: 770394	Old Town Station ID: 770395	Hebron Station ID: 770396	Trinity Mills Station ID: 770397	Green Line (Departs) ID: 29816
		6	5	4	3	2	1	1
AM	5975	8:05	8:11	8:27	8:32	8:37	8:44	8:50
AM	5977	10:15	10:21	10:36	10:41	10:46	10:53	11:10
PM	5979	**12:05**	**12:11**	**12:26**	**12:31**	**12:36**	**12:43**	**12:50**
PM	5981	**1:55**	**2:01**	**2:16**	**2:21**	**2:26**	**2:33**	**2:50**
PM	5983	**3:45**	**3:51**	**4:06**	**4:11**	**4:16**	**4:23**	**4:30**
PM	5985	**5:40**	**5:46**	**6:01**	**6:06**	**6:11**	**6:18**	**6:27**
PM	5987	**7:40**	**7:46**	**8:01**	**8:06**	**8:11**	**8:18**	**8:27**
PM	5989	**9:40**	**9:46**	**10:01**	**10:06**	**10:11**	**10:18**	**10:27**
PM	5991*	**11:40**	**11:46**	12:01	12:06	12:11	12:18	12:26*

* 5991 Green Line train will terminate at Victory Station. Visit **dart.org** for full DART schedule.

AUGUST 2019

A-train

Post-COVID Schedule *(as of March 23, 2020)*

60 minute frequency all day M-Sa

A-train Schedule: Monday-Friday / Horario de A-train: Lunes-Viernes

Northbound / Dirección Norte

	Train #	Green Line (Arrives) 1 ID: 29816	Trinity Mills Station 1 ID: 770397	Hebron Station 2 ID: 770396	Old Town Station 3 ID: 770395	Highland Village Station 4 ID: 770394	MedPark Station 5 ID: 770393	DDTC (Arrives) 6 ID: 770001
AM	7302	-	-	-	5:20	5:27	5:44	5:50
	7904	5:55	6:00	6:08	6:13	6:22	6:38	6:44
	7906	6:43	7:00	7:08	7:13	7:22	7:38	7:44
	7908	7:48	8:00	8:08	8:13	8:22	8:38	8:44
	7910	8:48	9:00	9:08	9:13	9:22	9:38	9:44
	7912	9:45	10:00	10:08	10:13	10:22	10:38	10:44
	7914	10:44	11:00	11:08	11:13	11:22	11:38	11:44
	7916	11:44	**12:00**	**12:08**	**12:13**	**12:22**	**12:38**	**12:44**
PM	7918	**12:44**	**1:00**	**1:08**	**1:13**	**1:22**	**1:38**	**1:44**
	7920	**1:44**	**2:00**	**2:08**	**2:13**	**2:22**	**2:38**	**2:44**
	7922	**2:44**	**3:00**	**3:08**	**3:13**	**3:22**	**3:38**	**3:44**
	7924	**3:44**	**4:00**	**4:08**	**4:13**	**4:22**	**4:38**	**4:44**
	7926	**4:44**	**5:00**	**5:08**	**5:13**	**5:22**	**5:38**	**5:44**
	7928	**5:44**	**6:00**	**6:08**	**6:13**	**6:22**	**6:38**	**6:44**
	7930	**6:45**	**7:00**	**7:08**	**7:13**	**7:22**	**7:38**	**7:44**
	7932	**7:44**	**8:00**	**8:08**	**8:13**	**8:22**	**8:38**	**8:44**
	7934	**8:44**	**9:00**	**9:08**	**9:13**	**9:22**	**9:38**	**9:44**

Southbound / Hacia el Sur

	Train #	DDTC (Departs) 6 ID: 770001	MedPark Station 5 ID: 770393	Highland Village Station 4 ID: 770394	Old Town Station 3 ID: 770395	Hebron Station 2 ID: 770396	Trinity Mills Station 1 ID: 770397	Green Line (Departs) 1 ID: 29816
AM	7901	6:00	6:06	6:22	6:27	6:32	6:39	6:43
	7903	7:00	7:06	7:22	7:27	7:32	7:39	7:43
	7905	8:00	8:06	8:22	8:27	8:32	8:39	8:50
	7907	9:00	9:06	9:22	9:27	9:32	9:39	9:50
	7909	10:00	10:06	10:22	10:27	10:32	10:39	10:50
	7911	11:00	11:06	11:22	11:27	11:32	11:39	11:50
PM	7913	**12:00**	**12:06**	**12:22**	**12:27**	**12:32**	**12:39**	**12:50**
	7915	**1:00**	**1:06**	**1:22**	**1:27**	**1:32**	**1:39**	**1:50**
	7917	**2:00**	**2:06**	**2:22**	**2:27**	**2:32**	**2:39**	**2:50**
	7919	**3:00**	**3:06**	**3:22**	**3:27**	**3:32**	**3:39**	**3:56**
	7921	**4:00**	**4:06**	**4:22**	**4:27**	**4:32**	**4:39**	**4:56**
	7923	**5:00**	**5:06**	**5:22**	**5:27**	**5:32**	**5:39**	**5:48**
	7925	**6:00**	**6:06**	**6:22**	**6:27**	**6:32**	**6:39**	**6:50**
	7927	**7:00**	**7:06**	**7:22**	**7:27**	**7:32**	**7:39**	**7:50**
	7929	**8:00**	**8:06**	**8:22**	**8:27**	**8:32**	**8:39**	**8:50**
	7931	**9:00**	**9:06**	**9:22**	**9:27**	**9:32**	**9:39**	**9:57**

A-train Schedule: Saturday / Horario de A-train: Sábado

Northbound / Dirección Norte

	Train #	Green Line (Arrives) 1 ID: 29816	Trinity Mills Station 1 ID: 770397	Hebron Station 2 ID: 770396	Old Town Station 3 ID: 770395	Highland Village Station 4 ID: 770394	MedPark Station 5 ID: 770393	DDTC (Arrives) 6 ID: 770001
AM	5374	—	—	—	7:30	7:36	7:52	7:58
	5976	9:15	9:20	9:26	9:31	9:37	9:53	9:59
	5978	11:05	11:10	11:16	11:21	11:27	11:43	11:49
PM	5980	**12:45**	**1:00**	**1:06**	**1:11**	**1:17**	**1:33**	**1:39**
	5982	**2:45**	**2:50**	**2:56**	**3:01**	**3:07**	**3:23**	**3:29**
	5984	**4:45**	**4:50**	**4:56**	**5:01**	**5:07**	**5:23**	**5:29**
	5986	**6:45**	**6:50**	**6:56**	**7:01**	**7:07**	**7:23**	**7:29**
	5988	**8:42**	**8:45**	**8:51**	**8:56**	**9:02**	**9:18**	**9:24**
	5990	**10:42**	**10:45**	**10:51**	**10:56**	**11:02**	**11:18**	**11:24**

Southbound / Hacia el Sur

	Train #	DDTC (Departs) 6 ID: 770001	MedPark Station 5 ID: 770393	Highland Village Station 4 ID: 770394	Old Town Station 3 ID: 770395	Hebron Station 2 ID: 770396	Trinity Mills Station 1 ID: 770397	Green Line (Departs) 1 ID: 29816
AM	5975	8:05	8:11	8:27	8:32	8:37	8:44	8:50
	5977	10:15	10:21	10:36	10:41	10:46	10:53	11:10
PM	5979	**12:05**	**12:11**	**12:26**	**12:31**	**12:36**	**12:43**	**12:50**
	5981	**1:55**	**2:01**	**2:16**	**2:21**	**2:26**	**2:33**	**2:50**
	5983	**3:45**	**3:51**	**4:06**	**4:11**	**4:16**	**4:23**	**4:30**
	5985	**5:40**	**5:46**	**6:01**	**6:06**	**6:11**	**6:18**	**6:27**
	5987	**7:40**	**7:46**	**8:01**	**8:06**	**8:11**	**8:18**	**8:27**
	5989	**9:40**	**9:46**	**10:01**	**10:06**	**10:11**	**10:18**	**10:27**
	5991*	**11:40**	**11:46**	12:01	12:06	12:11	12:18	12:26 *

* 5991 Green Line train will terminate at Victory Station. Visit **dart.org** for full DART schedule.

A-train

Service	Pre-COVID-19	March 23 Changes	May 11 Changes	August 24 Changes
A-train	**Weekday Frequency** – *30 min.* **Average Monthly Ridership** – *31,768* **Annualized Cost for Service** – *(Information on Following Slides)*	**Weekday Frequency** – *60 min.* **Monthly Ridership** – *(Detailed Information on Following Slides)* **Annualized Cost of Service** - *(Information on Following Slides)*	No Changes to A-train Service; Continued March 23rd Service Levels	Propose to Continue Existing Service Levels until January 2021

A-train

AVERAGE MONTHLY RAIL (Pre-COVID--June '19-Feb '20)	31,768
TOTAL MONTHLY RAIL (March 2020)	18,479
TOTAL MONTHLY RAIL (April 2020)	5,649
TOTAL MONTHLY RAIL (May 2020)	5,762
TOTAL MONTHLY RAIL (June 2020)	7,069
AVERAGE MONTHLY RAIL (March-June 2020)	9,240
AVERAGE MONTHLY RAIL (April-June 2020)	6,160
% Change March-June 2020 and June 2019-Feb 2020	-71%
% Change April-June 2020 and June 2019-Feb 2020	-81%

A-train

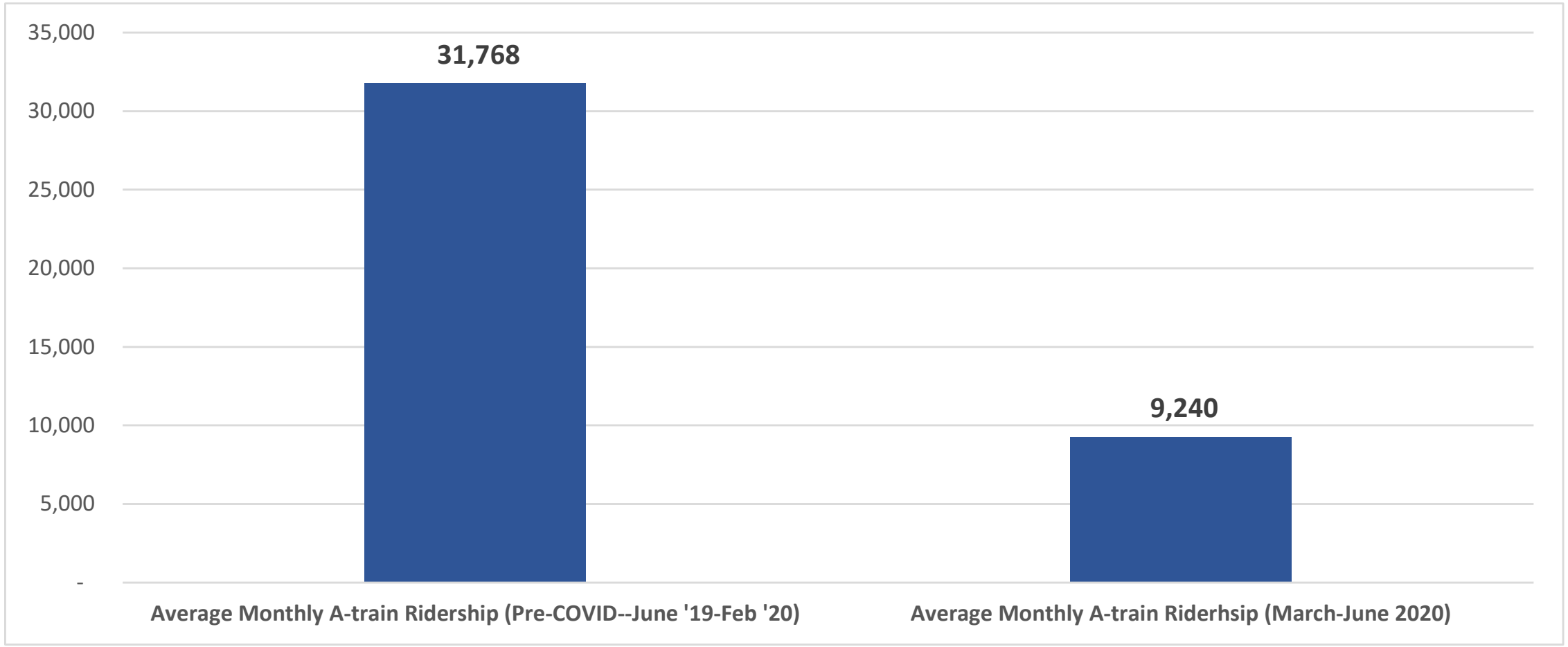
35,000
30,000
25,000
20,000
15,000
10,000
5,000
-
31,768
9,240
Average Monthly A-train Ridership (Pre-COVID--June '19-Feb '20)
Average Monthly A-train Riderhsip (March-June 2020)

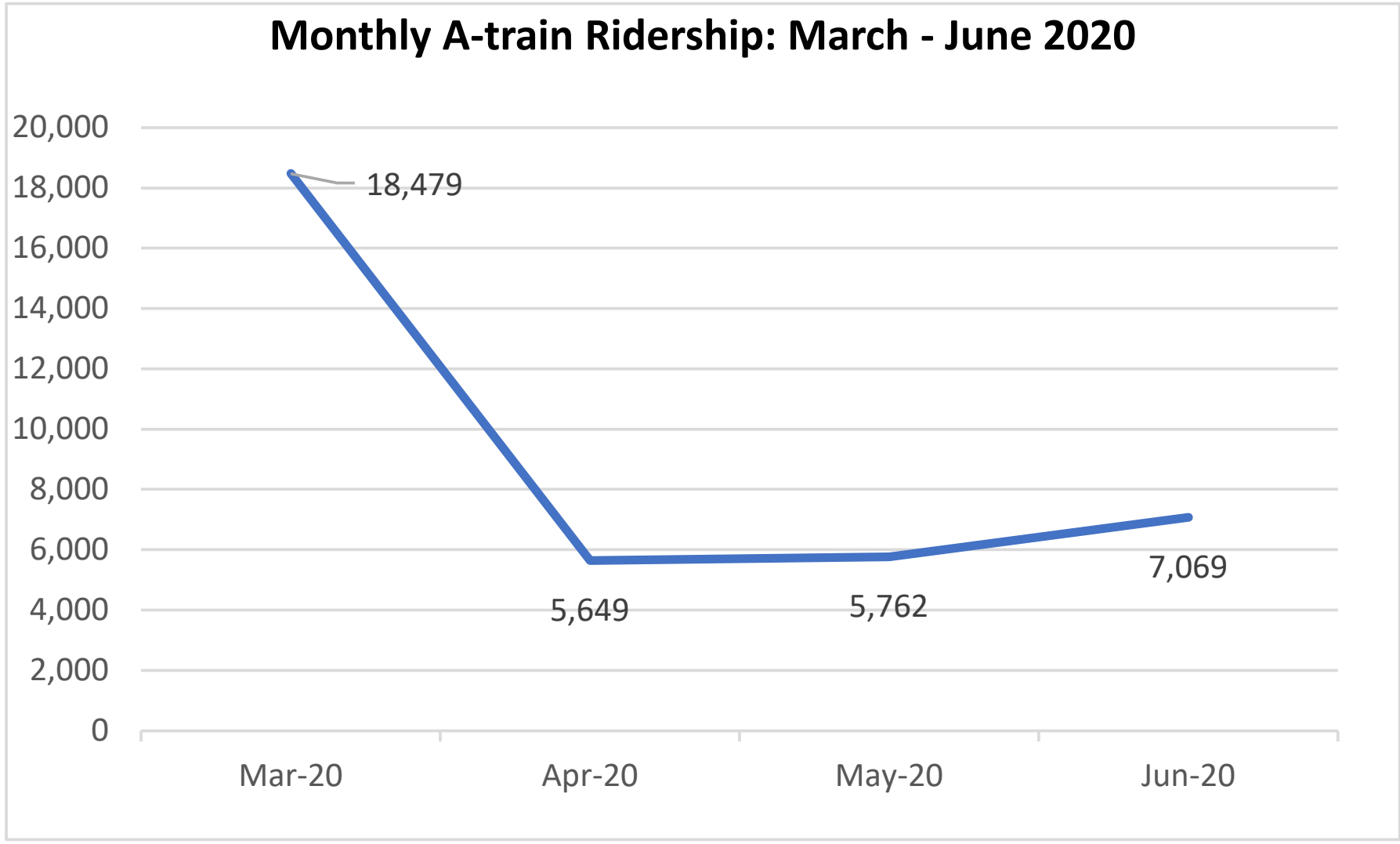
Monthly A-train Ridership: March - June 2020
20,000
18,000
16,000
14,000
12,000
10,000
8,000
6,000
4,000
2,000
0
18,479
5,649
5,762
7,069
Mar-20
Apr-20
May-20
Jun-20

A-train

Daily Ridership Counts February 2020 through July 15, 2020

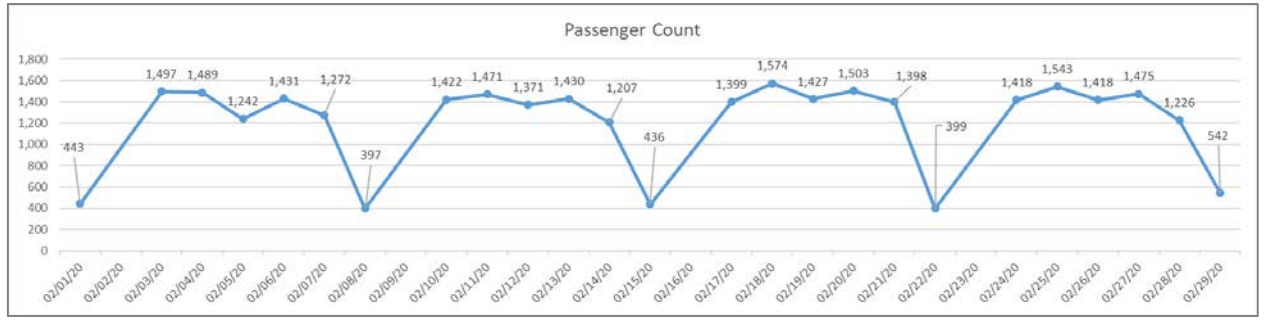

May 2020

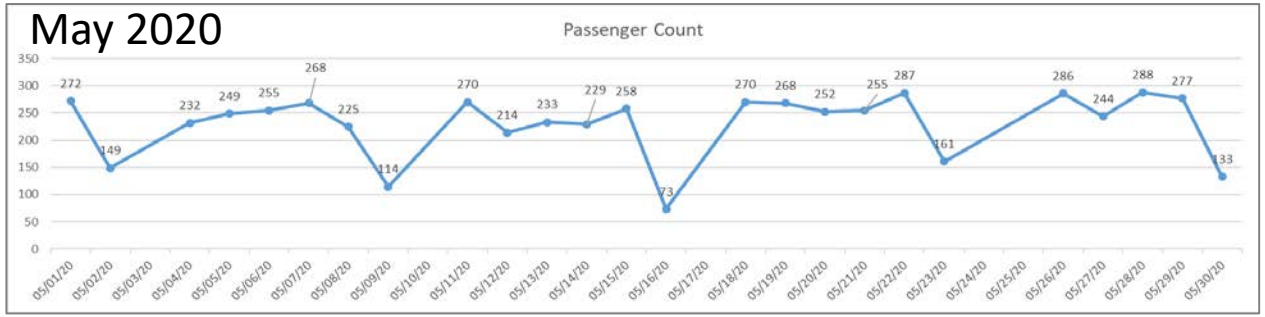

March 2020

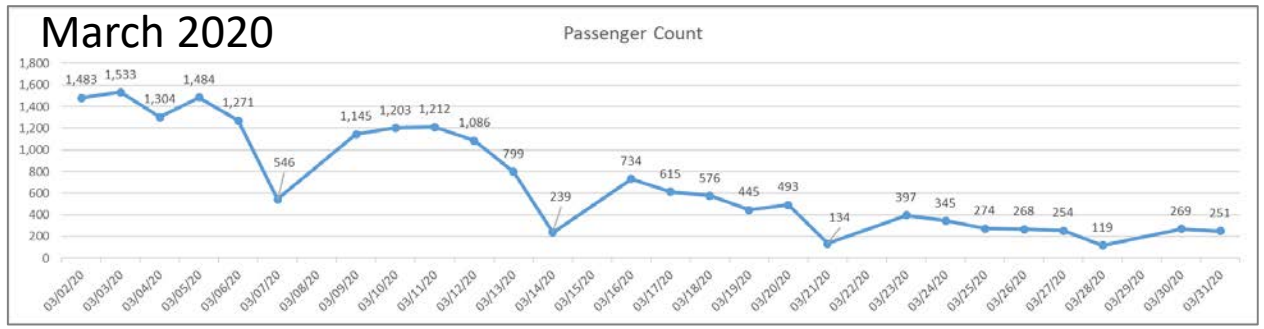

June 2020

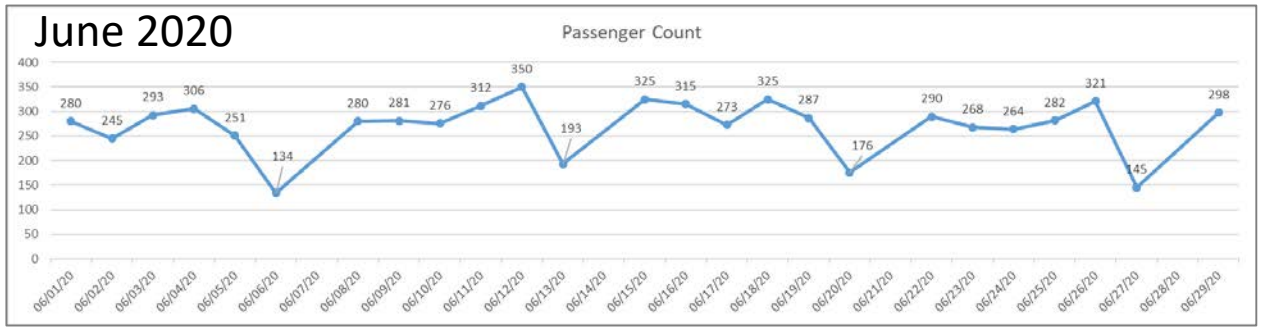

April 2020



July 1 -15, 2020

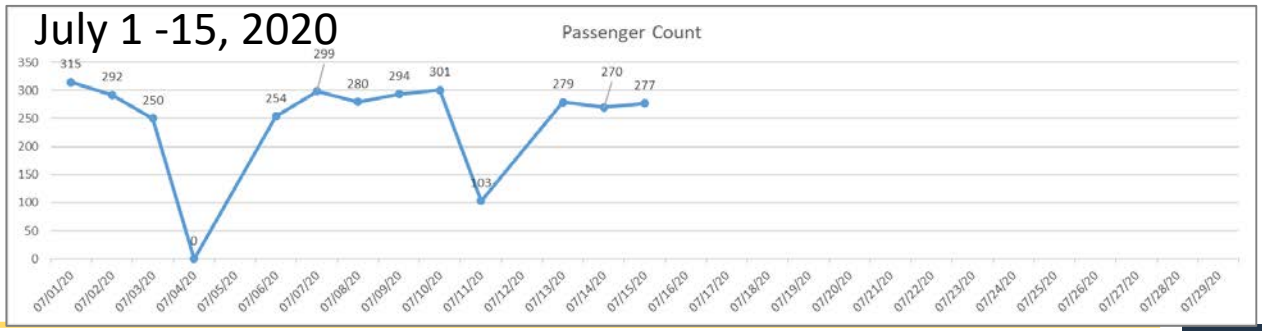

A-train

Service Level	# Daily Train Trips		# Cars	Estimated Monthly Car Miles	Car Mile Rate	Estimated Monthly Crew Hours	Crew Rate	Estimated Monthly Fuel Gallons	Budgeted Fuel Rate	Estimated Annualized Total Cost ***
30 Minute Frequency*	68 (+2)	M-Th (F)	1	32,000	$3.50	1,700	$142.21	24,000	$2.75	**$5,037,084.00**
All Day	16	Sa								
30 Minute Frequency*	68 (+2)	M-Th (F)	2	64,000	$3.50	1,700	$142.21	48,000	$2.75	**$7,173,084.00**
All Day	16	Sa								
60 Minute Frequency**	34	M-F	1	17,000	$7.62	850	$171.80	12,500	$2.75	**$3,719,340.00**
All Day (Current Service Level)	16	Sa								
60 Minute Frequency**	34	M-F	2	34,000	$4.48	850	$171.80	25,000	$2.75	**$4,405,200.00**
All Day (Current Service Level)	16	Sa								

* Car Mile Rate and Crew Rate are based on FY20 contracted rates with First Transit

** Current Service Car Mile Rate and Crew Rate were negotiated with First Transit as DCTA implemented reduced service levels in response to the COVID-19 pandemic.

*** For cost comparison simplicity, only cost-driving variables impacted by service levels (number of cars and estimated car miles, crew hours and fuel) are calculated in Estimated Annualized Cost. Additional costs built into the First Transit contract (administration, dispatch, technology and maintenace on facilities, vehicles, ROW and ticket vending machines) are not included as they are fixed costs and not impacted by service level.

CONNECT FIXED ROUTE SERVICE

DCTA

Denton Connect – Route 1



Pre-COVID Schedule (before March 23, 2020)

Route 1 Schedule: Monday-Friday / Horario de Ruta 1: Lunes-Viernes

Outbound to Unicorn Lake / Hacia Unicorn Lake				Inbound to DDTC / Hacia DDTC				
DDTC (Departs)	Bell at Industrial	Teasley at Londonderry	Windriver at Unicorn Lake	Shoreline at Windriver	Teasley at Londonderry	Teasley at Shady Oaks	Dallas at Smith	Bell at Prairie
1	2	3	4	5	3	6	7	8
ID: 770540	ID: 770183	ID: 770171	ID: 770403	ID: 770404	ID: 770415	ID: 770547	ID: 770179	ID: 770182
–	–	–	–	6:06	6:11	6:15	6:17	6:19
6:36	6:39	6:44	6:51	6:56	7:01	7:05	7:07	7:09
7:16	7:19	7:24	7:31	7:36	7:41	7:45	7:47	7:49
8:06	8:09	8:14	8:21	8:26	8:31	8:35	8:37	8:39
8:46	8:49	8:54	9:01	9:06	9:11	9:15	9:17	9:19
9:34	9:37	9:42	9:49	9:54	9:59	10:03	10:05	10:07
10:24	10:27	10:32	10:39	10:44	10:49	10:53	10:55	10:57
11:04	11:07	11:12	11:19	11:24	11:29	11:33	11:35	11:37
11:54	11:57	12:02	12:09	12:14	12:19	12:23	12:25	12:27
12:34	12:37	12:42	12:49	12:54	12:59	1:03	1:05	1:07
1:14	1:17	1:22	1:29	1:34	1:39	1:43	1:45	1:47
2:04	2:07	2:12	2:19	2:24	2:29	2:33	2:35	2:37
2:44	2:47	2:52	2:59	3:04	3:09	3:13	3:15	3:17
3:29	3:32	3:37	3:44	3:49	3:54	3:58	4:00	4:02
4:21	4:24	4:29	4:36	4:41	4:46	4:50	4:52	4:54
5:01	5:04	5:09	5:16	5:21	5:26	5:30	5:32	5:34
5:51	5:54	5:59	6:06	6:11	6:16	6:20	6:22	6:24
6:27	6:30	6:35	6:41	6:50	6:54	6:57	6:59	7:01
7:12	7:15	7:20	7:26	7:35	7:39	7:42	7:44	7:46
7:57	8:00	8:05	8:11	8:20	8:24	8:27	8:29	8:31
8:42	8:45	8:50	8:56	9:05	9:09	9:12	9:14	9:16

Route 1 Schedule: Saturday / Horario de Ruta 1: Sábado

Outbound to Unicorn Lake / Hacia Unicorn Lake				Inbound to DDTC / Hacia DDTC				
DDTC (Departs)	Bell at Industrial	Teasley at Londonderry	Windriver at Unicorn Lake	Shoreline at Windriver	Teasley at Londonderry	Teasley at Shady Oaks	Dallas at Smith	Bell at Prairie
1	2	3	4	5	3	6	7	8
ID: 770540	ID: 770183	ID: 770171	ID: 770403	ID: 770404	ID: 770415	ID: 770547	ID: 770179	ID: 770182
–	–	–	–	7:39	7:45	7:47	7:48	7:50
8:05	8:08	8:12	8:18	8:24	8:30	8:32	8:33	8:35
8:47	8:50	8:54	9:00	9:09	9:15	9:17	9:18	9:20
9:32	9:35	9:39	9:45	9:54	10:00	10:02	10:03	10:05
10:17	10:20	10:24	10:30	10:39	10:45	10:47	10:48	10:50
11:02	11:05	11:09	11:15	11:24	11:30	11:32	11:33	11:35
11:56	11:59	12:03	12:09	12:10	12:16	12:18	12:19	12:21
12:32	12:35	12:39	12:45	12:54	1:00	1:02	1:03	1:05
1:17	1:20	1:24	1:30	1:35	1:41	1:43	1:44	1:46
2:02	2:05	2:09	2:15	2:24	2:30	2:32	2:33	2:35
2:47	2:50	2:54	3:00	3:09	3:15	3:17	3:18	3:20
3:36	3:39	3:43	3:49	3:54	4:00	4:02	4:03	4:05
4:17	4:20	4:24	4:30	4:39	4:45	4:47	4:48	4:50
5:02	5:05	5:09	5:15	5:20	5:26	5:20	5:29	5:31
5:47	5:50	5:54	6:00	6:09	6:15	6:17	6:18	6:20
6:32	6:35	6:39	6:45	6:50	6:56	6:58	6:59	7:01

Post-COVID Schedule (as of May 11, 2020)

Route 1 Schedule: Monday-Saturday / Lunes-Sábado

Outbound to Unicorn Lake / Hacia Unicorn Lake			
DDTC (Arrives)	Bell at Industrial	Teasley at Londonderry	Windriver at Unicorn Lake
1	2	3	4
ID: 770540	ID: 770183	ID: 770171	ID: 770403
–	–	7:24	7:31
8:05	8:08	8:12	8:18
8:47	8:50	8:54	9:00
9:32	9:35	9:39	9:45
10:17	10:20	10:24	10:30
11:02	11:05	11:09	11:15
11:56	11:59	12:03	12:09
12:32	12:35	12:39	12:45
1:17	1:20	1:24	1:30
2:02	2:05	2:09	2:15
2:47	2:50	2:54	3:00
3:36	3:39	3:43	3:49
4:17	4:18	4:24	4:30
5:02	5:05	5:09	5:15
5:47	5:50	5:54	6:00
6:32	6:35	6:39	6:45

This trip is Monday-Friday **ONLY**. Not operated on Saturday.

Inbound to DDTC / Hacia DDTC				
Shoreline at Windriver	Teasley at Londonderry	Teasley at Shady Oaks	Dallas at Smith	Bell at Prairie
5	3	6	7	8
ID: 770404	ID: 770415	ID: 770547	ID: 770179	ID: 770182
6:54	7:00	7:02	7:03	7:05
7:39	7:45	7:47	7:48	7:50
8:24	8:30	8:32	8:33	8:35
9:09	9:15	9:17	9:18	9:20
9:54	10:00	10:02	10:03	10:05
10:39	10:45	10:47	10:48	10:50
11:24	11:30	11:32	11:33	11:35
12:10	12:16	12:18	12:19	12:21
12:54	1:00	1:02	1:03	1:05
1:35	1:41	1:43	1:44	1:46
2:24	2:30	2:32	2:33	2:35
3:09	3:15	3:17	3:18	3:20
3:54	4:00	4:02	4:03	4:05
4:39	4:45	4:47	4:48	4:50
5:20	5:26	5:20	5:29	5:31
6:09	6:15	6:17	6:18	6:20
6:50	6:56	6:58	6:59	7:01

This trip is Monday-Friday **ONLY**. Not operated on Saturday.

Denton Connect – Route 1

Service	Pre-COVID-19	March 23 Changes	May 11 Changes	August 24 Changes
Route 1	**Frequency** – 50 minutes **Average Monthly Ridership** – 2,176 **Average Daily Ridership** – 85 **Average Monthly Cost for Service*** – $14,162.02	Saturday schedule with additional morning run **Frequency** – 50 minutes **Ridership (3/23 – 5/10)** – 24 {daily average} **Average Cost of Service for 42 days* (3/23 – 5/10)** – $21,579.81	Saturday schedule with additional morning run **Frequency** – 50 minutes **Ridership (5/11 – 6/30)** – 31 {daily average} **Average Cost of Service for 43 days* (5/11 – 6/30)** – $22,414.85	Saturday schedule with additional morning run **Frequency** – 50 minutes **Estimated Average Monthly Cost of Service*** – $12,863.52

**Costs calculated utilizing an average of the posted FY20 fuel costs and allocating out by miles of service plus the average of the posted FY20 Salaries and Wages, Fringe Benefits, Workers Compensation Insurance and Auto Liability Insurance and allocating them by hours of service. The costs shown are not representative of a fully allocated cost.*

Denton Connect – Route 2

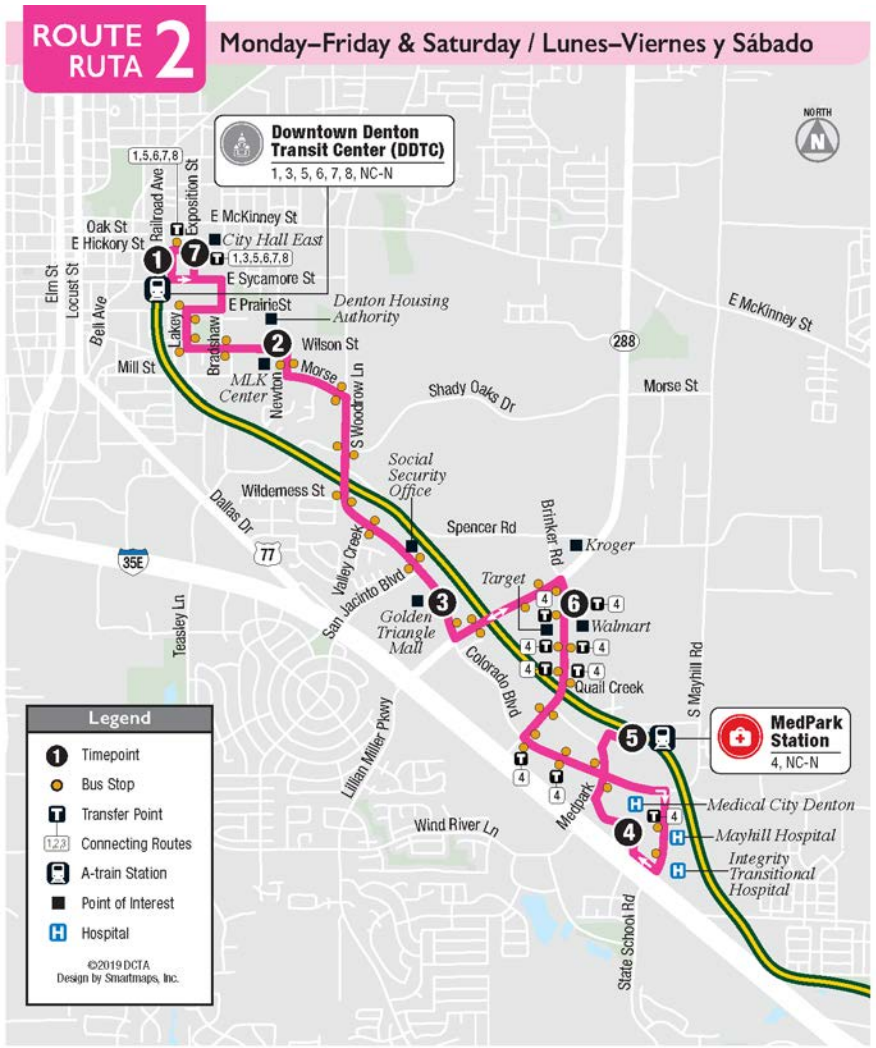

Pre-COVID Schedule (before March 23, 2020)

Route 2 Schedule: Monday-Friday / Horario de Ruta 2: Lunes-Viernes

	Outbound to MedPark / Salida hacia MedPark				Inbound to DDTC / Hacia DDTC				
	DDTC (Departs)	MLK Center	Golden Triangle Mall	Med. City Denton	Med Park Station	Brinker at Loop 288	Golden Triangle Mall	MLK Center	Exposition at Hickory
	1 ID: 770540	2 ID: 770189	3 ID: 770196	4 ID: 770210	5 ID: 770541	6 ID: 770199	3 ID: 770221	2 ID: 770228	7 ID: 770501
AM	5:34	5:37	5:44	5:54	6:11	6:16	6:19	6:26	6:30
	6:08	6:11	6:18	6:28	6:45	6:50	6:53	7:00	7:04
	6:42	6:45	6:52	7:02	7:19	7:24	7:27	7:34	7:38
	7:16	7:19	7:26	7:36	7:53	7:58	8:01	8:08	8:12
	7:50	7:53	8:00	8:10	8:27	8:32	8:35	8:42	8:46
	8:24	8:27	8:34	8:44	9:01	9:06	9:09	9:16	9:20
	8:58	9:01	9:08	9:18	9:35	9:40	9:43	9:50	9:54
	9:32	9:35	9:42	9:52	10:09	10:14	10:17	10:24	10:28
	10:00	10:03	10:10	10:20	10:24	10:29	10:32	10:39	10:43
	10:55	10:58	11:05	11:15	11:24	11:29	11:33	11:39	11:43
PM	11:55	11:58	12:05	12:15	12:24	12:29	12:33	12:39	12:43
	12:55	12:58	1:05	1:15	1:24	1:29	1:33	1:39	1:43
	1:55	1:58	2:05	2:15	2:24	2:29	2:33	2:39	2:43
	2:55	2:58	3:05	3:15	3:24	3:29	3:32	3:39	3:43
	3:33	3:36	3:43	3:53	4:05	4:10	4:13	4:20	4:24
	3:58	4:01	4:08	4:18	4:30	4:35	4:39	4:45	4:49
	4:39	4:42	4:49	4:59	5:11	5:16	5:19	5:26	5:30
	4:58	5:01	5:08	5:18	5:30	5:35	5:39	5:45	5:49
	5:39	5:42	5:49	5:59	6:11	6:16	6:19	6:26	6:30
	5:58	6:01	6:08	6:18	6:26	6:31	6:34	6:41	6:45
	6:56	6:59	7:06	7:16	7:25	7:30	7:34	7:40	7:44
	7:56	7:59	8:06	8:16	8:25	8:30	8:34	8:40	8:44
	8:56	8:59	9:06	9:16	9:25	9:30	9:33	9:40	9:44

Route 2 Schedule: Saturday / Horario de Ruta 2: Sábado

	Outbound to MedPark / Salida hacia MedPark				Inbound to DDTC / Hacia DDTC				
	DDTC (Departs)	MLK Center	Golden Triangle Mall	Med. City Denton	Med Park Station	Brinker at Loop 288	Golden Triangle Mall	MLK Center	Exposition at Hickory
	1 ID: 770540	2 ID: 770189	3 ID: 770196	4 ID: 770210	5 ID: 770541	6 ID: 770199	3 ID: 770221	2 ID: 770228	7 ID: 770501
AM	7:44	7:49	7:53	8:04	8:11	8:20	8:25	8:30	8:34
	8:44	8:49	8:53	9:04	9:11	9:20	9:25	9:30	9:34
	9:44	9:49	9:53	10:04	10:11	10:20	10:25	10:30	10:34
	10:45	10:50	10:54	11:05	11:11	11:20	11:25	11:30	11:34
	11:44	11:49	11:53	12:04	12:11	12:20	12:25	12:30	12:34
PM	12:45	12:50	12:54	1:05	1:11	1:20	1:25	1:30	1:34
	1:45	1:50	1:54	2:05	2:11	2:20	2:25	2:30	2:34
	2:45	2:50	2:54	3:05	3:11	3:20	3:25	3:30	3:34
	3:45	3:50	3:54	4:05	4:11	4:20	4:25	4:30	4:34
	4:44	4:49	4:53	5:04	5:11	5:20	5:25	5:30	5:34
	5:45	5:50	5:54	6:05	6:11	6:20	6:25	6:30	6:34
	6:46	6:51	6:55	7:06	7:11	7:20	7:25	7:30	7:34

Post-COVID Schedule (as of May 11, 2020)

Route 2 Schedule: Monday-Saturday / Lunes-Sábado

	Outbound to MedPark / Salida hacia MedPark			
	DDTC (Departs)	MLK Center	Golden Triangle Mall	Med. City Denton
	1 ID: 770540	2 ID: 770189	3 ID: 770196	4 ID: 770210
AM	6:44	6:49	6:53	7:04
	7:44	7:49	7:53	8:04
	8:44	8:49	8:53	9:04
	9:44	9:49	9:53	10:04
	10:45	10:50	10:54	11:05
	11:44	11:49	11:53	**12:04**
PM	**12:45**	**12:50**	**12:54**	**1:05**
	1:45	**1:50**	**1:54**	**2:05**
	2:45	**2:50**	**2:54**	**3:05**
	3:45	**3:50**	**3:54**	**4:05**
	4:44	**4:49**	**4:53**	**5:04**
	5:45	**5:50**	**5:54**	**6:05**
	6:46	**6:51**	**6:55**	**7:06**

This trip is Monday-Friday **ONLY**; Not operated on Saturday.

	Inbound to DDTC / Hacia DDTC				
	Med Park Station	Brinker at Loop 288	Golden Triangle Mall	MLK Center	Exposition at Hickory
	5 ID: 770541	3 ID: 770199	6 ID: 770221	7 ID: 770228	8 ID: 770501
AM	7:11	7:20	7:25	7:30	7:34
	8:11	8:20	8:25	8:30	8:34
	9:11	9:20	9:25	9:30	9:34
	10:11	10:20	10:25	10:30	10:34
	11:11	11:20	11:25	11:30	11:34
PM	**12:11**	**12:20**	**12:25**	**12:30**	**12:34**
	1:11	**1:20**	**1:25**	**1:30**	**1:34**
	2:11	**2:20**	**2:25**	**2:30**	**2:34**
	3:11	**3:20**	**3:25**	**3:30**	**3:34**
	4:11	**4:20**	**4:25**	**4:30**	**4:34**
	5:11	**5:20**	**5:25**	**5:30**	**5:34**
	6:11	**6:20**	**6:25**	**6:30**	**6:34**
	7:11	**7:20**	**7:25**	**7:30**	**7:34**

This trip is Monday-Friday **ONLY**; Not operated on Saturday.

Denton Connect – Route 2

Service	Pre-COVID-19	March 23 Changes	May 11 Changes	August 24 Changes
Route 2	**Frequency** – 30 minutes **Average Monthly Ridership** – 3,932 **Average Daily Ridership** – 154 **Monthly Cost for Service*** –$21,384.91	Saturday schedule with additional morning run **Frequency** – 60-minutes **Ridership (3/23 – 5/10)** – 54 {daily average} **Cost of Service for 42 days* (3/23 – 5/10) –** $23,149.06	Saturday schedule with additional morning run **Frequency** – 60-minutes **Ridership (5/11 – 6/30)** – 64 {daily average} **Cost of Service for 43 days* (5/11 – 6/30)** – $22,911.77	Saturday schedule with additional morning run **Frequency** – 60-minutes **Estimated Average Monthly Cost of Service*** – $13,245.91

**Costs calculated utilizing an average of the posted FY20 fuel costs and allocating out by miles of service plus the average of the posted FY20 Salaries and Wages, Fringe Benefits, Workers Compensation Insurance and Auto Liability Insurance and allocating them by hours of service. The costs shown are not representative of a fully allocated cost.*

Denton Connect – Route 3



Pre-COVID Schedule (before March 23, 2020)

Route 3 Schedule: Monday-Friday / Horario de Ruta 3: Lunes-Viernes

	Outbound to Trinity / Salida hacia Trinity					Inbound to DDTC / Hacia DDTC					
	DDTC (Departs)	Hickory at Bradshaw	McKinney at Fountains of Denton	Cardinal at Oriole	McKinney at Ashli Oaks	Trinity at McKinney	McKinney at Ashli Oaks	McKinney at Dutchess	Cardinal at Oriole	McKinney at Springtree	McKinney at Audra
	1	2	3	4	5	6	5	7	4	8	9
	ID: 770540	ID: 770120	ID: 770123	ID: 770142	ID: 770135	ID: 770132	ID: 770135	ID: 770692	ID: 770142	ID: 770123	ID: 770146
AM	5:55	5:57	6:01	6:03	6:09	6:13	6:15	6:18	6:22	6:26	6:28
	6:17	6:19	6:23	6:25	6:31	6:35	6:37	6:40	6:44	6:48	6:50
	6:39	6:41	6:45	6:47	6:53	6:57	6:59	7:02	7:06	7:10	7:12
	7:01	7:03	7:07	7:09	7:15	7:19	7:21	7:24	7:28	7:32	7:34
	7:23	7:25	7:29	7:31	7:37	7:41	7:43	7:46	7:50	7:54	7:56
	7:45	7:47	7:51	7:53	7:59	8:03	8:05	8:08	8:12	8:16	8:18
	8:07	8:09	8:13	8:15	8:21	8:25	8:27	8:30	8:34	8:38	8:40
	8:29	8:31	8:35	8:37	8:43	8:47	8:49	8:52	8:56	9:00	9:02
	8:47	8:49	8:53	8:55	9:01	9:05	9:07	9:10	9:14	9:18	9:20
	9:32	9:34	9:38	9:40	9:46	9:50	9:52	9:55	9:59	10:03	10:05
	10:17	10:19	10:23	10:25	10:31	10:35	10:37	10:40	10:44	10:48	10:50
	11:02	11:04	11:08	11:10	11:16	11:20	11:22	11:25	11:29	11:33	11:35
	11:47	11:49	11:53	11:55	12:01	12:05	12:07	12:10	12:14	12:18	12:20
PM	12:32	12:34	12:38	12:40	12:46	12:50	12:52	12:55	12:59	1:03	1:05
	1:17	1:19	1:23	1:25	1:31	1:35	1:37	1:40	1:44	1:48	1:50
	2:02	2:04	2:08	2:10	2:16	2:20	2:22	2:25	2:29	2:33	2:35
	2:47	2:49	2:53	2:55	3:01	3:04	3:06	3:09	3:13	3:17	3:19
	3:28	3:30	3:34	3:36	3:42	3:45	3:47	3:50	3:54	3:58	3:59
	3:44	3:46	3:50	3:52	3:58	4:01	4:03	4:06	4:10	4:14	4:15
	4:06	4:08	4:12	4:14	4:20	4:23	4:25	4:28	4:32	4:36	4:37
	4:28	4:30	4:34	4:36	4:42	4:45	4:47	4:50	4:54	4:58	4:59
	4:50	4:52	4:56	4:58	5:04	5:07	5:09	5:12	5:16	5:20	5:21
	5:12	5:14	5:18	5:20	5:26	5:29	5:31	5:34	5:38	5:42	5:43
	5:34	5:36	5:40	5:42	5:48	5:51	5:53	5:56	6:00	6:04	6:05
	5:56	5:58	6:02	6:04	6:10	6:13	6:15	6:18	6:22	6:26	6:27
	6:18	6:20	6:24	6:26	6:32	6:35	6:37	6:40	6:44	6:48	6:49
	6:40	6:42	6:46	6:48	6:54	6:57	6:59	7:02	7:06	7:10	7:11
	7:02	7:04	7:08	7:10	7:16	7:19	7:21	7:24	7:28	7:32	7:33
	7:24	7:26	7:30	7:32	7:38	7:41	7:43	7:46	7:50	7:54	7:55
	8:09	8:11	8:15	8:17	8:23	8:26	8:28	8:31	8:35	8:39	8:40
	8:54	8:56	9:00	9:02	9:08	9:11	9:13	9:16	9:20	9:24	9:25

Route 3 Schedule: Saturday / Horario de Ruta 3: Sábado

	Outbound to Trinity / Salida hacia Trinity					Inbound to DDTC / Hacia DDTC					
	DDTC (Departs)	Hickory at Bradshaw	McKinney at Fountains of Denton	Cardinal at Oriole	McKinney at Ashli Oaks	Trinity at McKinney	McKinney at Ashli Oaks	McKinney at Dutchess	Cardinal at Oriole	McKinney at Springtree	McKinney at Audra
	1	2	3	4	5	6	5	7	4	8	9
	ID: 770540	ID: 770120	ID: 770123	ID: 770142	ID: 770135	ID: 770132	ID: 770135	ID: 770692	ID: 770142	ID: 770123	ID: 770146
AM	8:05	8:07	8:11	8:15	8:21	8:23	8:28	8:30	8:33	8:37	8:39
	9:05	9:07	9:11	9:15	9:21	9:23	9:28	9:30	9:33	9:37	9:39
	10:05	10:07	10:11	10:15	10:21	10:23	10:28	10:30	10:33	10:37	10:39
	11:05	11:07	11:11	11:15	11:21	11:23	11:28	11:30	11:33	11:37	11:39
PM	12:05	12:07	12:11	12:15	12:21	12:23	12:28	12:30	12:33	12:37	12:39
	1:05	1:07	1:11	1:15	1:21	1:23	1:28	1:30	1:33	1:37	1:39
	2:05	2:07	2:11	2:15	2:21	2:23	2:28	2:30	2:33	2:37	2:38
	3:05	3:07	3:11	3:15	3:21	3:23	3:28	3:30	3:33	3:37	3:38
	4:05	4:07	4:11	4:15	4:21	4:23	4:28	4:30	4:33	4:37	4:39
	5:05	5:07	5:11	5:15	5:21	5:23	5:28	5:30	5:33	5:37	5:39
	6:05	6:07	6:11	6:15	6:21	6:23	6:28	6:30	6:33	6:37	6:39

Post-COVID Schedule (as of May 11, 2020)

Route 3 Schedule: Monday-Saturday / Lunes-Sábado

	Outbound to Trinity / Salida hacia Trinity				
	DDTC (Departs)	Hickory at Bradshaw	McKinney at Fountains of Denton	Cardinal at Oriole	McKinney at Ashli Oaks
	1	2	3	4	5
	ID: 770540	ID: 770120	ID: 770123	ID: 770142	ID: 770135
AM	7:05	7:07	7:11	7:15	7:21
	8:05	8:07	8:11	8:15	8:21
	9:05	9:07	9:11	9:15	9:21
	10:05	10:07	10:11	10:15	10:21
	11:05	11:07	11:11	11:15	11:21
PM	12:05	12:07	12:11	12:15	12:21
	1:05	1:07	1:11	1:15	1:21
	2:05	2:07	2:11	2:15	2:21
	3:05	3:07	3:11	3:15	3:21
	4:05	4:07	4:11	4:15	4:21
	5:05	5:07	5:11	5:15	5:21
	6:05	6:07	6:11	6:15	6:21

This trip is Monday-Friday **ONLY**; Not operated on Saturday.

	Inbound to DDTC / Hacia DDTC					
	Trinity at McKinney	McKinney at Ashli Oaks	McKinney at Dutchess	Cardinal at Oriole	McKinney at Springtree	McKinney at Audra
	6	5	7	4	8	9
	ID: 770132	ID: 770135	ID: 770692	ID: 770142	ID: 770123	ID: 770146
AM	7:23	7:28	7:30	7:33	7:37	7:39
	8:23	8:28	8:30	8:33	8:37	8:39
	9:23	9:28	9:30	9:33	9:37	9:39
	10:23	10:28	10:30	10:33	10:37	10:39
	11:23	11:28	11:30	11:33	11:37	11:39
PM	12:23	12:28	12:30	12:33	12:37	12:39
	1:23	1:28	1:30	1:33	1:37	1:39
	2:23	2:28	2:30	2:33	2:37	2:39
	3:23	3:28	3:30	3:33	3:37	3:39
	4:23	4:28	4:30	4:33	4:37	4:39
	5:23	5:28	5:30	5:33	5:37	5:39
	6:23	6:28	6:30	6:33	6:37	6:39

This trip is Monday-Friday **ONLY**; Not operated on Saturday.

Denton Connect – Route 3

Service	Pre-COVID-19	March 23 Changes	May 11 Changes	August 24 Changes
Route 3	**Frequency** – 33 minutes **Average Monthly Ridership** – 5,486 **Average Daily Ridership** – 214 **Monthly Cost for Service*** – $20,629.54	Saturday schedule with additional morning run **Frequency** – 60-minutes **Ridership (3/23 – 5/10)** – 38 {daily average} **Cost of Service for 42 days* (3/23 – 5/10)** – $32,356.16	Saturday schedule with additional morning run **Frequency** – 60-minutes **Ridership (5/11 – 6/30)** – 45 {daily average} **Cost of Service for 43 days* (5/11 – 6/30)** – $22,248.28	Saturday schedule with additional morning run **Frequency** – 60-minutes **Estimated Average Monthly Cost of Service*** – $12,172.31

**Costs calculated utilizing an average of the posted FY20 fuel costs and allocating out by miles of service plus the average of the posted FY20 Salaries and Wages, Fringe Benefits, Workers Compensation Insurance and Auto Liability Insurance and allocating them by hours of service. The costs shown are not representative of a fully allocated cost.*

Denton Connect – Route 4 (Northbound)

Northbound



Pre-COVID Schedule (before March 23, 2020)

Route 4 Schedule: Monday-Friday / Horario de Ruta 4: Lunes-Viernes

Northbound to Mesa Dr / Hacia el norte a Mesa Dr

	Shoreline Wind River (Departs) ① ID: 770402	MedPark Station ② ID: 770541	Brinker at Loop 288 ③ ID: 770682	Loop 288 at McKinney ④ ID: 770690	University at Bell ⑤ ID: 770699	University at Ector ⑥ ID: 770450	Mesa at Los Colinas ⑦ ID: 770507
AM	5:18	5:26	5:30	5:36	5:53	5:58	6:02
	5:48	5:56	6:00	6:06	6:23	6:28	6:32
	6:18	6:26	6:30	6:36	6:53	6:58	7:02
	6:48	6:56	7:00	7:06	7:23	7:28	7:32
	7:18	7:26	7:30	7:36	7:53	7:58	8:02
	7:48	7:56	8:00	8:06	8:23	8:28	8:32
	8:18	8:26	8:30	8:36	8:53	8:58	9:02
	8:48	8:56	9:00	9:06	9:23	9:28	9:32
	9:18	9:26	9:30	9:36	9:53	9:58	10:02
	9:48	9:56	10:00	10:06	10:23	10:28	10:32
	10:48	10:56	11:00	11:06	11:23	11:28	11:32
	11:48	11:56	**12:00**	**12:06**	**12:23**	**12:28**	**12:32**
PM	**12:48**	**12:56**	**1:00**	**1:06**	**1:23**	**1:28**	**1:32**
	1:48	**1:56**	**2:00**	**2:06**	**2:23**	**2:28**	**2:32**
	2:48	**2:56**	**3:00**	**3:06**	**3:23**	**3:28**	**3:32**
	3:18	**3:26**	**3:30**	**3:36**	**3:53**	**3:58**	**4:04**
	3:48	**3:56**	**4:00**	**4:06**	**4:23**	**4:28**	**4:32**
	4:18	**4:26**	**4:30**	**4:36**	**4:53**	**4:58**	**5:02**
	4:48	**4:56**	**5:00**	**5:06**	**5:23**	**5:28**	**5:32**
	5:18	**5:26**	**5:30**	**5:36**	**5:53**	**5:58**	**6:02**
	5:48	**5:56**	**6:00**	**6:06**	**6:23**	**6:28**	**6:32**
	6:18	**6:26**	**6:30**	**6:36**	**6:53**	**6:58**	**7:02**
	6:48	**6:56**	**7:00**	**7:06**	**7:23**	**7:28**	**7:32**
	7:48	**7:56**	**8:00**	**8:06**	**8:23**	**8:28**	**8:32**
	8:48	**8:56**	**9:00**	**9:06**	**9:23**	**9:28**	**9:32**

Route 4 Schedule: Saturday / Horario de Ruta 4: Sábado

Northbound to Mesa Dr / Hacia el norte a Mesa Dr

	Shoreline Wind River (Departs) ① ID: 770402	MedPark Station ② ID: 770541	Brinker at Loop 288 ③ ID: 770682	Loop 288 at McKinney ④ ID: 770690	University at Bell ⑤ ID: 770699	University at Ector ⑥ ID: 770450	Mesa at Los Colinas ⑦ ID: 770507
AM	7:45	7:52	7:55	8:02	8:23	8:29	8:35
	8:45	8:52	8:55	9:02	9:23	9:28	9:34
	9:45	9:52	9:55	10:02	10:23	10:29	10:35
	10:45	10:52	10:55	11:02	11:23	11:28	11:34
	11:45	11:52	11:55	**12:02**	**12:23**	**12:28**	**12:34**
PM	**12:45**	**12:52**	**12:55**	**1:02**	**1:23**	**1:28**	**1:34**
	1:45	**1:52**	**1:55**	**2:02**	**2:23**	**2:28**	**2:34**
	2:45	**2:52**	**2:55**	**3:02**	**3:23**	**3:28**	**3:34**
	3:45	**3:52**	**3:55**	**4:02**	**4:23**	**4:28**	**4:34**
	4:45	**4:52**	**4:55**	**5:02**	**5:23**	**5:28**	**5:34**
	5:45	**5:52**	**5:55**	**6:02**	**6:23**	**6:28**	**6:34**

Post-COVID Schedule (as of May 11, 2020)

Route 4 Schedule: Monday-Saturday / Lunes-Sábado

Northbound to Mesa Dr / Hacia el norte a Mesa Dr

	Shoreline Wind River (Departs) ① ID: 770402	MedPark Station ② ID: 770541	Brinker at Loop 288 ③ ID: 770682	Loop 288 at McKinney ④ ID: 770690	University at Bell ⑤ ID: 770699	University at Ector ⑥ ID: 770450	Mesa at Los Colinas ⑦ ID: 770507
AM	6:45	6:52	6:55	7:02	7:23	7:29	7:35
	7:45	7:52	7:55	8:02	8:23	8:28	8:34
	8:45	8:52	8:55	9:02	9:23	9:29	9:35
	9:45	9:52	9:55	10:02	10:23	10:28	10:34
	10:45	10:52	10:55	11:02	11:23	11:28	11:34
	11:45	11:52	11:55	**12:02**	**12:23**	**12:28**	**12:34**
PM	**12:45**	**12:52**	**12:55**	**1:02**	**1:23**	**1:28**	**1:34**
	1:45	**1:52**	**1:55**	**2:02**	**2:23**	**2:28**	**2:34**
	2:45	**2:52**	**2:55**	**3:02**	**3:23**	**3:28**	**3:34**
	3:45	**3:52**	**3:55**	**4:02**	**4:23**	**4:28**	**4:34**
	4:45	**4:52**	**4:55**	**5:02**	**5:23**	**5:28**	**5:34**
	5:45	**5:52**	**5:55**	**6:02**	**6:23**	**6:28**	**6:34**

This trip is Monday-Friday **ONLY**; Not operated on Saturday.

Denton Connect – Route 4 (Southbound)

Southbound



Pre-COVID Schedule (before March 23, 2020)

Route 4 Schedule: Monday-Friday / Horario de Ruta 4: Lunes-Viernes

Southbound to Unicorn Lake / Hacia el sur a Unicorn Lake

	Mesa at Barcelona (Departs) 7 ID: 770506	University at Bonnie Brae 6 ID: 770391	University at Bell 5 ID: 770700	Loop 288 at McKinney 4 ID: 770691	Brinker at Spencer 3 ID: 770683	MedPark Station 2 ID: 770541	Unicorn Lake at Shoreline 1 ID: 770404
AM	6:20	6:23	6:31	6:49	6:53	7:00	7:05
	6:50	6:53	7:01	7:19	7:23	7:30	7:35
	7:20	7:23	7:31	7:49	7:53	8:00	8:05
	7:50	7:53	8:01	8:19	8:23	8:30	8:35
	8:20	8:23	8:31	8:49	8:53	9:00	9:05
	8:50	8:53	9:01	9:19	9:23	9:30	9:35
	9:20	9:23	9:31	9:49	9:53	10:00	10:05
	9:50	9:53	10:01	10:19	10:23	10:30	10:35
	10:20	10:23	10:31	10:49	10:53	11:00	11:05
	10:50	10:53	11:01	11:19	11:23	11:30	11:35
	11:50	11:53	12:01	12:19	12:23	12:30	12:35
PM	12:50	12:53	1:01	1:19	1:23	1:30	1:35
	1:50	1:53	2:01	2:19	2:23	2:30	2:35
	2:50	2:53	3:01	3:19	3:23	3:30	3:35
	3:50	3:53	4:01	4:19	4:23	4:30	4:35
	4:20	4:23	4:31	4:49	4:53	5:00	5:05
	4:50	4:53	5:01	5:19	5:23	5:30	5:35
	5:20	5:23	5:31	5:49	5:53	6:00	6:05
	5:50	5:53	6:01	6:19	6:23	6:30	6:35
	6:20	6:23	6:31	6:49	6:53	7:00	7:05
	6:50	6:53	7:01	7:19	7:23	7:30	7:35
	7:20	7:23	7:31	7:49	7:53	8:00	8:05
	7:50	7:53	8:01	8:19	8:23	8:30	8:35
	8:50	8:53	9:01	9:19	9:23	9:30	9:35
	9:50	9:53	10:01	10:19	10:23	10:30	10:35

Route 4 Schedule: Saturday / Horario de Ruta 4: Sábado

Southbound to Unicorn Lake / Hacia el sur a Unicorn Lake

	Mesa at Barcelona (Departs) 7 ID: 770506	University at Bonnie Brae 6 ID: 770391	University at Bell 5 ID: 770700	Loop 288 at McKinney 4 ID: 770691	Brinker at Spencer 3 ID: 770683	MedPark Station 2 ID: 770541	Unicorn Lake at Shoreline 1 ID: 770404
AM	8:42	8:47	8:55	9:14	9:20	9:26	9:32
	9:42	9:47	9:55	10:14	10:20	10:26	10:32
	10:42	10:47	10:55	11:14	11:20	11:26	11:32
	11:42	11:47	11:55	12:14	12:20	12:26	12:32
PM	12:42	12:47	12:55	1:14	1:20	1:26	1:32
	1:42	1:47	1:55	2:14	2:20	2:26	2:32
	2:42	2:47	2:55	3:14	3:20	3:26	3:32
	3:42	3:47	3:55	4:14	4:20	4:26	4:32
	4:42	4:47	4:55	5:14	5:20	5:26	5:32
	5:42	5:47	5:55	6:14	6:20	6:26	6:32
	6:42	6:47	6:55	7:14	7:20	7:26	7:32

Post-COVID Schedule (as of May 11, 2020)

Route 4 Schedule: Monday-Saturday / Lunes-Sábado

Southbound to Unicorn Lake / Hacia el sur a Unicorn Lake

	Mesa at Barcelona (Departs) 7 ID: 770506	University at Bonnie Brae 6 ID: 770391	University at Bell 5 ID: 770700	Loop 288 at McKinney 4 ID: 770691	Brinker at Spencer 3 ID: 770683	MedPark Station 2 ID: 770541	Unicorn Lake at Shoreline 1 ID: 770404
AM	7:42	7:47	7:55	8:14	8:20	8:26	8:32
	8:42	8:47	8:55	9:14	9:20	9:26	9:32
	9:42	9:47	9:55	10:14	10:20	10:26	10:32
	10:42	10:47	10:55	11:14	11:20	11:26	11:32
	11:42	11:47	11:55	12:14	12:20	12:26	12:32
PM	12:42	12:47	12:55	1:14	1:20	1:26	1:32
	1:42	1:47	1:55	2:14	2:20	2:26	2:32
	2:42	2:47	2:55	3:14	3:20	3:26	3:32
	3:42	3:47	3:55	4:14	4:20	4:26	4:32
	4:42	4:47	4:55	5:14	5:20	5:26	5:32
	5:42	5:47	5:55	6:14	6:20	6:26	6:32
	6:42	6:47	6:55	7:14	7:20	7:26	7:32

This trip is Monday-Friday **ONLY**; Not operated on Saturday.

Denton Connect – Route 4

Service	Pre-COVID-19	March 23 Changes	May 11 Changes	August 24 Changes
Route 4	**Frequency** – 30 minutes **Average Monthly Ridership** – 4,832 **Average Daily Ridership** – 189 **Monthly Cost for Service*** – $37,307.46	Saturday schedule with additional morning run **Frequency** – 60-minutes **Ridership (3/23 – 5/10)** – 72 {daily average} **Cost of Service for 42 days* (3/23 – 5/10)** – $42,955.22	Saturday schedule with additional morning run **Frequency** – 60-minutes **Ridership (5/11 – 6/30)** – 86 {daily average} **Cost of Service for 43 days* (5/11 – 6/30)** – $44,142.82	Saturday schedule with additional morning run **Frequency** – 60-minutes **Estimated Average Monthly Cost of Service* –** $25,342.29

**Costs calculated utilizing an average of the posted FY20 fuel costs and allocating out by miles of service plus the average of the posted FY20 Salaries and Wages, Fringe Benefits, Workers Compensation Insurance and Auto Liability Insurance and allocating them by hours of service. The costs shown are not representative of a fully allocated cost.*

Denton Connect – Route 5

Route Map as of March 23, 2020 (Service currently suspended)

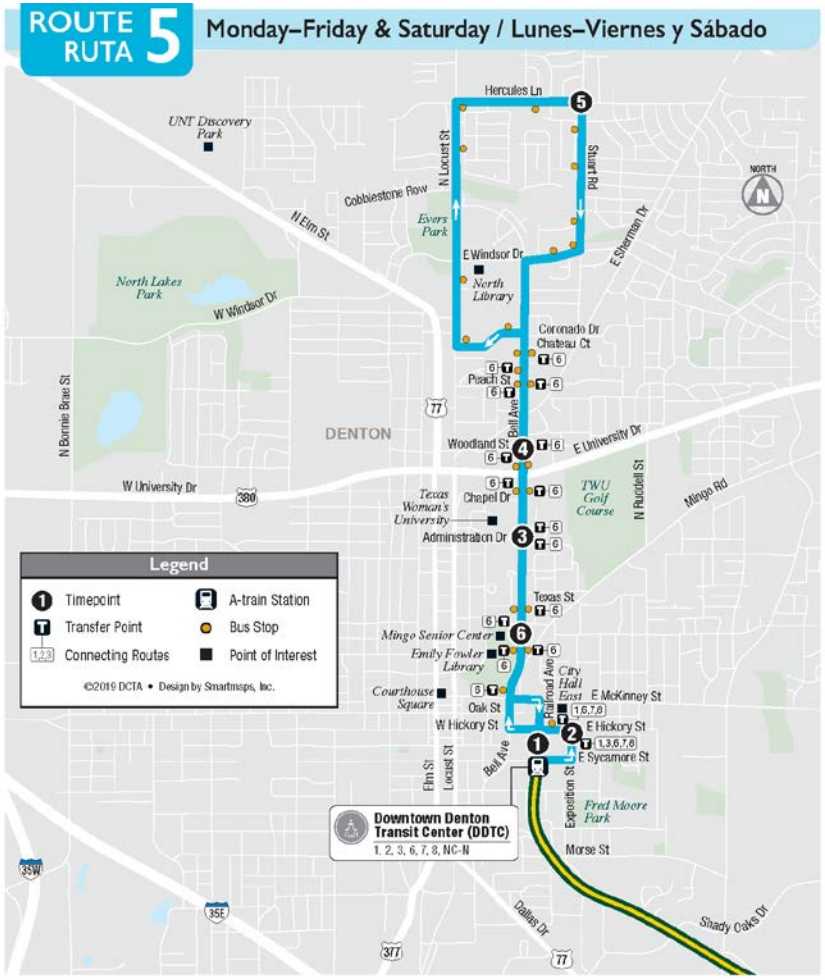

Pre-COVID Schedule (before March 23, 2020)

Route 5 Schedule: Monday-Friday / Horario de Ruta 5: Lunes-Viernes

	Outbound to Hercules / Salida hacia Hercules					Inbound to DDTC / Hacia DDTC		
	DDTC (Departs)	Exposition at Hickory	Bell at Administration	Bell at Woodland	Hercules at Stuart	Bell at Woodland	Bell at Administration	Bell at Mingo
	1	2	3	4	5	4	3	6
	ID: 770540	ID: 770501	ID: 770057	ID: 770061	ID: 770079	ID: 770089	ID: 770057	ID: 770031
AM	5:28	5:30	5:35	5:37	5:43	5:49	5:50	5:52
	5:46	5:48	5:53	5:55	6:01	6:07	6:08	6:10
	6:04	6:06	6:11	6:13	6:19	6:25	6:26	6:28
	6:17	6:19	6:24	6:26	6:32	6:38	6:39	6:41
	6:40	6:42	6:47	6:49	6:55	7:01	7:02	7:04
	6:53	6:55	7:00	7:02	7:08	7:14	7:15	7:17
	7:16	7:18	7:23	7:25	7:31	7:37	7:38	7:40
	7:29	7:31	7:36	7:38	7:44	7:50	7:51	7:53
	7:47	7:49	7:54	7:56	8:02	8:08	8:09	8:11
	8:11	8:13	8:18	8:20	8:26	8:32	8:33	8:35
	8:23	8:25	8:30	8:32	8:38	8:44	8:45	8:47
	8:59	9:01	9:06	9:08	9:15	9:21	9:22	9:24
	9:35	9:37	9:42	9:44	9:51	9:57	9:58	10:00
	10:11	10:13	10:18	10:20	10:27	10:33	10:34	10:36
	10:47	10:49	10:54	10:56	11:03	11:09	11:10	11:12
	11:23	11:25	11:30	11:32	11:39	11:45	11:46	11:48
PM	11:59	12:01	12:06	12:08	12:15	12:21	12:22	12:24
	12:35	12:37	12:42	12:44	12:51	12:57	12:58	1:00
	1:11	1:13	1:18	1:20	1:27	1:33	1:34	1:36
	1:47	1:49	1:54	1:56	2:03	2:09	2:10	2:12
	2:23	2:25	2:30	2:32	2:39	2:45	2:46	2:48
	2:58	2:59	3:04	3:06	3:13	3:19	3:20	3:22
	3:20	3:21	3:26	3:28	3:35	3:41	3:42	3:44
	3:36	3:37	3:42	3:44	3:51	3:57	3:58	4:00
	3:58	3:59	4:04	4:06	4:13	4:19	4:20	4:22
	4:19	4:20	4:25	4:27	4:34	4:40	4:41	4:43
	4:36	4:37	4:42	4:44	4:51	4:57	4:58	5:00
	4:57	4:58	5:03	5:05	5:12	5:18	5:19	5:21
	5:14	5:15	5:20	5:22	5:29	5:35	5:36	5:38
	5:35	5:36	5:41	5:43	5:50	5:56	5:57	5:59
	5:52	5:53	5:58	6:00	6:07	6:13	6:14	6:16
	6:20	6:21	6:26	6:28	6:35	6:41	6:42	6:44
	6:30	6:31	6:36	6:38	6:45	6:51	6:52	6:54
	6:58	6:59	7:04	7:06	7:13	7:19	7:20	7:22
	7:08	7:10	7:15	7:17	7:23	7:29	7:30	7:32
	7:44	7:46	7:51	7:53	7:59	8:05	8:06	8:08
	8:20	8:22	8:27	8:29	8:35	8:41	8:42	8:44
	8:56	8:58	9:03	9:05	9:11	9:17	9:18	9:20

Route 5 Schedule: Saturday / Horario de Ruta 5: Sábado

	Outbound to Hercules / Salida hacia Hercules					Inbound to DDTC / Hacia DDTC		
	DDTC (Departs)	Exposition at Hickory	Bell at Administration	Bell at Woodland	Hercules at Stuart	Bell at Woodland	Bell at Administration	Bell at Mingo
	1	2	3	4	5	4	3	6
	ID: 770540	ID: 770501	ID: 770057	ID: 770061	ID: 770079	ID: 770089	ID: 770057	ID: 770031
AM	8:09	8:11	8:16	8:18	8:25	8:30	8:32	8:34
	8:49	8:51	8:56	8:58	9:05	9:11	9:12	9:14
	9:29	9:31	9:36	9:38	9:45	9:51	9:52	9:54
	10:09	10:11	10:16	10:18	10:25	10:31	10:32	10:34
	10:49	10:51	10:56	10:58	11:05	11:11	11:12	11:14
	11:29	11:31	11:36	11:38	11:45	11:51	11:52	11:54
PM	12:09	12:11	12:16	12:18	12:25	12:31	12:32	12:34
	12:49	12:51	12:56	12:58	1:05	1:11	1:12	1:14
	1:24	1:26	1:31	1:33	1:40	1:46	1:47	1:49
	2:09	2:11	2:16	2:18	2:25	2:31	2:32	2:34
	2:49	2:51	2:56	2:58	3:05	3:11	3:12	3:14
	3:16	3:18	3:23	3:25	3:32	3:38	3:39	3:41
	4:09	4:11	4:16	4:18	4:25	4:31	4:32	4:34
	4:49	4:51	4:56	4:58	5:05	5:11	5:12	5:14
	5:19	5:21	5:26	5:28	5:35	5:41	5:42	5:44
	6:09	6:11	6:16	6:18	6:25	6:31	6:32	6:34

Post-COVID Schedule (as of March 23, 2020)

Route 5 Schedule: Monday-Saturday / Lunes-Sábado

	Outbound to Hercules / Salida hacia Hercules				
	DDTC (Departs)	Exposition at Hickory	Bell at Administration	Bell at Woodland	Hercules at Stuart
	1	2	3	4	5
	ID: 770540	ID: 770501	ID: 770057	ID: 770061	ID: 770079
AM	7:29	7:31	7:36	7:38	7:45
	8:09	8:11	8:16	8:18	8:25
	8:49	8:51	8:56	8:58	9:05
	9:29	9:31	9:36	9:38	9:45
	10:09	10:11	10:16	10:18	10:25
	10:49	10:51	10:56	10:58	11:05
	11:29	11:31	11:36	11:38	11:45
PM	12:09	12:11	12:16	12:18	12:25
	12:49	12:51	12:56	12:58	1:05
	1:24	1:26	1:31	1:33	1:40
	2:09	2:11	2:16	2:18	2:25
	2:49	2:51	2:56	2:58	3:05
	3:16	3:18	3:23	3:25	3:32
	4:09	4:11	4:16	4:18	4:25
	4:49	4:51	4:56	4:58	5:05
	5:19	5:21	5:26	5:28	5:35
	6:09	6:11	6:16	6:18	6:25

This trip is Monday-Friday **ONLY**; Not operated on Saturday.

	Inbound to DDTC / Hacia DDTC		
	Bell at Woodland	Bell at Administration	Bell at Mingo
	4	3	6
	ID: 770089	ID: 770057	ID: 770031
AM	7:50	7:52	7:54
	8:30	8:32	8:34
	9:10	9:12	9:14
	9:50	9:52	9:54
	10:30	10:32	10:34
	11:10	11:12	11:14
	11:50	11:52	11:54
PM	12:30	12:32	12:34
	1:10	1:12	1:14
	1:45	1:47	1:49
	2:30	2:32	2:34
	3:10	3:12	3:14
	3:37	3:39	3:41
	4:30	4:32	4:34
	5:10	5:12	5:14
	5:40	5:42	5:44
	6:30	6:32	6:34

This trip is Monday-Friday **ONLY**; Not operated on Saturday.

Denton Connect – Route 5

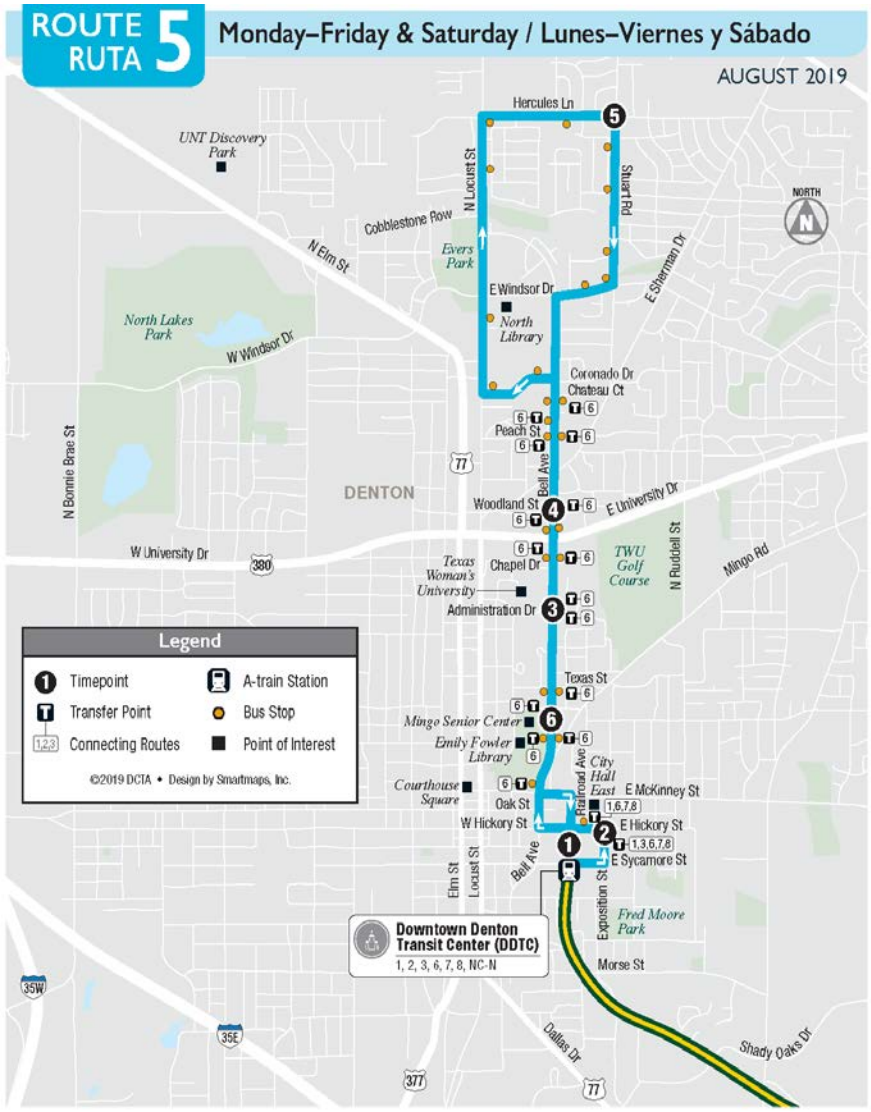

Passengers who previously utilized Denton Connect Route 5 can utilize Denton Connect Route 6 to get to the majority of destinations.



Denton Connect – Route 5

Service	Pre-COVID-19	March 23 Changes	May 11 Changes	August 24 Changes
Route 5	**Frequency** – 30 minutes **Average Monthly Ridership** – 3,723 **Average Daily Ridership** – 145 **Monthly Cost for Service*** – $20,161.13	Saturday schedule with additional morning run **Frequency** – 60-minutes **Ridership (3/23 – 5/10) –** 22 {daily average} **Cost of Service for 42 days* (3/23 – 5/10)** – $20,025.49	Suspended Service	Removal of Route

**Costs calculated utilizing an average of the posted FY20 fuel costs and allocating out by miles of service plus the average of the posted FY20 Salaries and Wages, Fringe Benefits, Workers Compensation Insurance and Auto Liability Insurance and allocating them by hours of service. The costs shown are not representative of a fully allocated cost.*

Denton Connect – Route 6

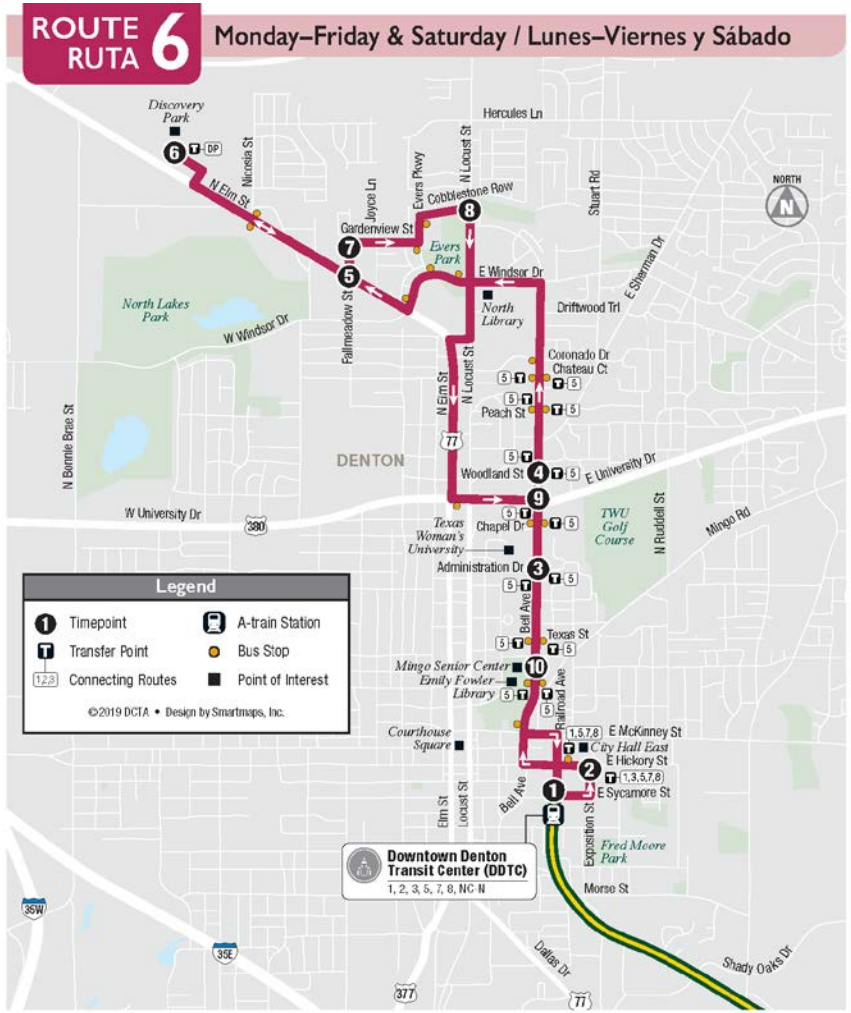

Pre-COVID Schedule (before March 23, 2020)

Route 6 Schedule: Monday-Friday / Horario de Ruta 6: Lunes-Viernes

	Outbound to Discovery Park / Salida a Discovery Park					Inbound to DDTC / Hacia DDTC					
	DDTC (Departs)	Exposition at Hickory	Bell at Administration	Bell at Woodland	Elm at Fallmeadow	Discovery Park	Fallmeadow at Gardenview	Cobblestone at Locust	University at Bell	Bell at Administration	Bell at Mingo
	1	2	3	4	5	6	7	8	9	3	10
	ID: 770540	ID: 770501	ID: 770057	ID: 770061	ID: 770070	ID: 148403	ID: 770071	ID: 770075	ID: 770070	ID: 770057	ID: 770031
AM	5:29	5:31	5:35	5:36	5:43	5:58	6:02	6:04	6:10	6:12	6:13
	5:57	5:59	6:03	6:04	6:11	6:26	6:30	6:32	6:38	6:40	6:41
	6:25	6:27	6:31	6:32	6:39	6:54	6:58	7:00	7:06	7:08	7:09
	6:53	6:55	6:59	7:00	7:07	7:22	7:26	7:28	7:34	7:36	7:37
	7:21	7:23	7:27	7:28	7:35	7:50	7:54	7:56	8:02	8:04	8:05
	7:49	7:51	7:55	7:56	8:03	8:18	8:22	8:24	8:30	8:32	8:33
	8:20	8:22	8:26	8:27	8:34	8:49	8:53	8:55	9:01	9:03	9:04
	8:48	8:50	8:54	8:55	9:02	9:14	9:18	9:20	9:26	9:28	9:29
	9:18	9:20	9:24	9:25	9:32	9:45	9:49	9:51	9:57	9:59	10:00
	9:48	9:50	9:54	9:55	10:02	10:13	10:17	10:19	10:25	10:27	10:28
	10:15	10:16	10:20	10:21	10:28	10:42	10:46	10:48	10:54	10:56	10:57
	11:04	11:06	11:10	11:11	11:18	11:30	11:34	11:36	11:42	11:44	11:45
PM	11:59	12:01	12:05	12:06	12:13	12:30	12:34	12:36	12:42	12:44	12:45
	12:52	12:54	12:58	12:59	1:06	1:24	1:28	1:30	1:36	1:38	1:39
	1:51	1:52	1:56	1:57	2:04	2:18	2:22	2:24	2:30	2:32	2:33
	2:45	2:47	2:51	2:52	2:59	3:09	3:13	3:15	3:21	3:23	3:24
	3:21	3:23	3:27	3:28	3:35	3:41	3:45	3:47	3:53	3:55	3:56
	3:35	3:37	3:41	3:42	3:49	4:00	4:04	4:06	4:12	4:14	4:15
	4:05	4:07	4:11	4:12	4:19	4:30	4:34	4:36	4:42	4:44	4:45
	4:27	4:29	4:33	4:34	4:41	4:55	4:59	5:01	5:07	5:09	5:10
	5:04	5:06	5:10	5:11	5:18	5:24	5:28	5:30	5:36	5:38	5:39
	5:23	5:25	5:29	5:30	5:37	5:55	5:59	6:01	6:07	6:09	6:10
	5:55	5:57	6:01	6:02	6:09	6:15	6:19	6:21	6:27	6:29	6:30
	6:16	6:18	6:22	6:23	6:30	6:41	6:45	6:47	6:53	6:55	6:56
	6:39	6:41	6:45	6:46	6:53	7:04	7:08	7:10	7:16	7:18	7:19
	7:09	7:11	7:15	7:16	7:23	7:34	7:38	7:40	7:46	7:48	7:49
	7:27	7:29	7:33	7:34	7:41	7:56	8:00	8:02	8:08	8:10	8:11
	8:21	8:23	8:27	8:28	8:35	8:50	8:54	8:56	9:02	9:04	9:05
	9:15	9:17	9:21	9:22	9:29	9:44	9:48	9:50	9:56	9:58	9:59

Route 6 Schedule: Saturday / Horario de Ruta 6: Sábado

	Outbound to Discovery Park / Salida a Discovery Park					Inbound to DDTC / Hacia DDTC					
	DDTC (Departs)	Exposition at Hickory	Bell at Administration	Bell at Woodland	Elm at Fallmeadow	Discovery Park	Fallmeadow at Gardenview	Cobblestone at Locust	University at Bell	Bell at Administration	Bell at Mingo
	1	2	3	4	5	6	7	8	9	3	10
	ID: 770540	ID: 770501	ID: 770057	ID: 770061	ID: 770070	ID: 148403	ID: 770071	ID: 770075	ID: 770070	ID: 770057	ID: 770031
AM	8:35	8:37	8:42	8:43	8:49	8:55	9:00	9:03	9:10	9:12	9:13
	9:27	9:29	9:34	9:35	9:41	9:47	9:52	9:55	10:02	10:04	10:05
	10:19	10:21	10:26	10:27	10:33	10:39	10:44	10:47	10:54	10:56	10:57
	11:11	11:13	11:18	11:19	11:25	11:31	11:36	11:39	11:46	11:48	11:49
PM	12:03	12:05	12:10	12:11	12:17	12:23	12:28	12:31	12:38	12:40	12:41
	12:55	12:57	1:02	1:03	1:09	1:15	1:20	1:23	1:30	1:32	1:33
	1:47	1:49	1:54	1:55	2:01	2:07	2:12	2:15	2:22	2:24	2:25
	2:39	2:41	2:46	2:47	2:53	2:59	3:04	3:07	3:14	3:16	3:17
	3:31	3:33	3:38	3:39	3:45	3:51	3:56	3:59	4:06	4:08	4:09
	4:23	4:25	4:30	4:31	4:37	4:43	4:48	4:51	4:58	5:00	5:01
	5:15	5:17	5:22	5:23	5:29	5:35	5:40	5:43	5:50	5:52	5:53

AUGUST 2019

Post-COVID Schedule (as of May 11, 2020)

Route 6 Schedule: Monday-Saturday / Lunes-Sábado

	Outbound to Discovery Park / Hacia Discovery Park				
	DDTC (Departs)	Exposition at Hickory	Bell at Administration	Bell at Woodland	Elm at Fallmeadow
	1	2	3	4	5
	ID: 770540	ID: 770501	ID: 770057	ID: 770061	ID: 770070
AM	7:43	7:45	7:50	7:51	7:57
	8:35	8:37	8:42	8:43	8:49
	9:27	9:29	9:34	9:35	9:41
	10:19	10:21	10:26	10:27	10:33
	11:11	11:13	11:18	11:19	11:25
PM	12:03	12:05	12:10	12:11	12:17
	12:55	12:57	1:02	1:03	1:09
	1:47	1:49	1:54	1:55	2:01
	2:39	2:41	2:46	2:47	2:53
	3:31	3:33	3:38	3:39	3:45
	4:23	4:25	4:30	4:31	4:37
	5:15	5:17	5:22	5:23	5:29

This trip is Monday-Friday **ONLY**; Not operated on Saturday.

	Inbound to DDTC / Hacia DDTC					
	Discovery Park	Fallmeadow at Gardenview	Cobblestone at Locust	University at Bell	Bell at Administration	Bell at Mingo
	6	7	8	9	3	10
	ID: 148403	ID: 770071	ID: 770075	ID: 770070	ID: 770057	ID: 770031
AM	8:03	8:08	8:11	8:18	8:20	8:21
	8:55	9:00	9:03	9:10	9:12	9:13
	9:47	9:52	9:55	10:02	10:04	10:05
	10:39	10:44	10:47	10:54	10:56	10:57
	11:31	11:36	11:39	11:46	11:48	11:49
PM	12:23	12:28	12:31	12:38	12:40	12:41
	1:15	1:20	1:23	1:30	1:32	1:33
	2:07	2:12	2:15	2:22	2:24	2:25
	2:59	3:04	3:07	3:14	3:16	3:17
	3:51	3:56	3:59	4:06	4:08	4:09
	4:43	4:48	4:51	4:58	5:00	5:01
	5:35	5:40	5:43	5:50	5:52	5:53

This trip is Monday-Friday **ONLY**; Not operated on Saturday.

Denton Connect – Route 6

Service	Pre-COVID-19	March 23 Changes	May 11 Changes	August 24 Changes
Route 6	**Frequency** – 30 minutes **Average Monthly Ridership** – 3,682 **Average Daily Ridership** – 144 **Monthly Cost for Service*** – $21,901.76	Saturday schedule with additional morning run **Frequency** – 60-minutes **Ridership (3/23 – 5/10)** – 16 {daily average} **Cost of Service for 42 days* (3/23 – 5/10)** – $18,001.44	Saturday schedule with additional morning run **Frequency** – 60-minutes **Ridership (5/11 – 6/30) –** 40 {daily average} **Cost of Service for 43 days* (5/11 – 6/30)** – $18,062.73	Saturday schedule with additional morning run **Frequency** – 60-minutes **Estimated Average Monthly Cost of Service*** – $10,207.08

**Costs calculated utilizing an average of the posted FY20 fuel costs and allocating out by miles of service plus the average of the posted FY20 Salaries and Wages, Fringe Benefits, Workers Compensation Insurance and Auto Liability Insurance and allocating them by hours of service. The costs shown are not representative of a fully allocated cost.*

Denton Connect – Route 7



Pre-COVID Schedule (before March 23, 2020)

Route 7 Schedule: Monday-Friday / Horario de Ruta 7: Lunes-Viernes

Outbound to Mesa / Salida hacia Mesa

	DDTC (Departs) ① ID: 770540	Exposition at Hickory ② ID: 770501	Oak at Elm ③ ID: 770002	Oak at Fry ④ ID: 770006	Oak at Thomas ⑤ —	Oak at I-35 / Hospital ⑥ ID: 770012	Mesa at Los Colinas ⑦ ID: 770507
AM	5:59	6:01	6:04	6:07	6:10	6:11	6:17
	6:27	6:29	6:32	6:35	6:38	6:39	6:45
	6:59	7:01	7:04	7:07	7:10	7:11	7:17
	7:27	7:29	7:32	7:35	7:38	7:39	7:45
	7:59	8:01	8:04	8:07	8:10	8:11	8:17
	8:27	8:29	8:32	8:35	8:38	8:39	8:45
	8:59	9:01	9:04	9:07	9:10	9:11	9:17
	9:27	9:29	9:32	9:35	9:38	9:39	9:45
	10:00	10:01	10:04	10:07	10:10	10:11	10:17
	10:27	10:29	10:32	10:35	10:38	10:39	10:45
	10:59	11:01	11:04	11:07	11:10	11:11	11:17
	11:16	11:17	11:20	11:22	11:25	11:27	11:33
PM	12:09	12:10	12:13	12:15	12:18	12:20	12:26
	1:02	1:03	1:06	1:08	1:11	1:13	1:19
	1:55	1:56	1:59	2:01	2:04	2:06	2:12
	2:48	2:49	2:52	2:54	2:57	2:59	3:05
	3:26	3:27	3:30	3:33	3:36	3:38	3:45
	3:56	3:57	4:00	4:03	4:06	4:08	4:15
	4:26	4:27	4:30	4:33	4:36	4:38	4:45
	4:56	4:57	5:00	5:03	5:06	5:08	5:15
	5:26	5:27	5:30	5:33	5:36	5:38	5:45
	5:56	5:57	6:00	6:03	6:06	6:08	6:15
	6:26	6:27	6:30	6:33	6:36	6:38	6:45
	7:19	7:21	7:24	7:27	7:31	7:32	7:40
	8:19	8:21	8:24	8:27	8:31	8:32	8:40
	9:19	9:21	9:24	9:27	9:31	9:32	9:40

Inbound to DDTC / Hacia DDTC

	Mesa at Health Services of N Texas ⑧ ID: 770506	University Uptown ⑨ ID: 148201	Charlotte at Ave G ⑩ ID: 770019	Eagle at Kendolph ⑪ ID: 770160	Welch at Chestnut ⑫ ID: 770165	Hickory at Elm ⑬ ID: 770028	NCTC Campus ⑭ —
AM	6:25	6:32	6:34	6:38	6:41	6:44	6:45
	6:55	7:02	7:04	7:08	7:11	7:14	7:15
	7:25	7:32	7:34	7:38	7:41	7:44	7:45
	7:55	8:02	8:04	8:08	8:11	8:14	8:15
	8:25	8:32	8:34	8:38	8:41	8:44	8:45
	8:55	9:02	9:04	9:08	9:11	9:14	9:15
	9:25	9:32	9:34	9:38	9:41	9:44	9:45
	9:55	10:02	10:04	10:08	10:11	10:14	10:15
	10:25	10:32	10:34	10:38	10:41	10:44	10:45
	10:47	10:52	10:54	10:58	11:01	11:01	11:01
	11:27	11:32	11:34	11:38	11:41	11:41	11:41
	11:40	11:47	11:49	11:53	11:56	11:59	12:00
PM	12:33	12:40	12:42	12:46	12:49	12:52	12:53
	1:26	1:33	1:35	1:39	1:42	1:45	1:46
	2:19	2:26	2:28	2:32	2:35	2:38	2:39
	3:18	3:25	3:27	3:31	3:34	3:37	3:38
	3:50	3:57	3:59	4:04	4:07	4:11	4:12
	4:19	4:26	4:28	4:33	4:36	4:40	4:41
	4:49	4:56	4:58	5:03	5:06	5:10	5:11
	5:19	5:26	5:28	5:33	5:36	5:40	5:41
	5:50	5:57	5:59	6:04	6:07	6:11	6:12
	6:19	6:26	6:28	6:33	6:36	6:40	6:41
	6:54	7:01	7:03	7:08	7:11	7:15	7:16
	7:45	7:53	7:55	8:00	8:03	8:07	8:08
	8:45	8:53	8:55	9:00	9:03	9:07	9:08
	9:48	9:53	9:55	10:00	10:03	10:09	10:10

Route 7 Schedule: Saturday / Horario de Ruta 7: Sábado

Outbound to Mesa / Salida hacia Mesa

	DDTC (Departs) ① ID: 770540	Exposition at Hickory ② ID: 770501	Oak at Elm ③ ID: 770002	Oak at Fry ④ ID: 770006	Oak at Thomas ⑤ —	Oak at I-35 / Hospital ⑥ ID: 770012	Mesa at Los Colinas ⑦ ID: 770507
AM	8:17	8:18	8:21	8:23	8:26	8:27	8:34
	9:17	9:18	9:21	9:23	9:26	9:27	9:34
	10:17	10:18	10:21	10:23	10:26	10:27	10:34
	11:17	11:18	11:21	11:23	11:26	11:27	11:34
PM	12:17	12:18	12:21	12:23	12:26	12:27	12:34
	1:17	1:18	1:21	1:23	1:26	1:27	1:34
	2:17	2:18	2:21	2:23	2:26	2:27	2:34
	3:17	3:18	3:21	3:23	3:26	3:27	3:34
	4:17	4:18	4:21	4:23	4:26	4:27	4:34
	5:17	5:18	5:21	5:23	5:26	5:27	5:34
	6:17	6:18	6:21	6:23	6:26	6:27	6:34

Inbound to DDTC / Hacia DDTC

	Mesa at Health Services of N Texas ⑧ ID: 770506	University Uptown ⑨ ID: 148201	Charlotte at Ave G ⑩ ID: 770019	Eagle at Kendolph ⑪ ID: 770160	Welch at Chestnut ⑫ ID: 770165	Hickory at Elm ⑬ ID: 770028	NCTC Campus ⑭ —
AM	8:45	8:51	8:54	8:57	9:00	9:03	9:04
	9:45	9:51	9:54	9:57	10:00	10:03	10:04
	10:45	10:51	10:54	10:57	11:00	11:03	11:04
	11:45	11:51	11:54	11:57	12:00	12:03	12:04
PM	12:45	12:51	12:54	12:57	1:00	1:03	1:04
	1:45	1:51	1:54	1:57	2:00	2:03	2:04
	2:45	2:51	2:54	2:57	3:00	3:03	3:04
	3:45	3:51	3:54	3:57	4:00	4:03	4:04
	4:45	4:51	4:54	4:57	5:00	5:03	5:04
	5:45	5:51	5:54	5:57	6:00	6:03	6:04
	6:42	6:51	6:54	6:57	7:00	7:03	7:04

Post-COVID Schedule (as of May 11, 2020)

Route 7 Schedule: Monday-Saturday / Lunes-Sábado

Outbound to Mesa / Salida hacia Mesa

	DDTC (Departs) ① ID: 770540	Oak at Elm ② ID: 770002	Oak at Fry ③ ID: 770006	Oak at Thomas ④ -	Oak at I-35 / Hospital ⑤ ID: 770012	Mesa at Los Colinas ⑥ ID: 770507
AM	7:17	7:21	7:23	7:26	7:27	7:34
	8:17	8:21	8:23	8:26	8:27	8:34
	9:17	9:21	9:23	9:26	9:27	9:34
	10:17	10:21	10:23	10:26	10:27	10:34
	11:17	11:21	11:23	11:26	11:27	11:34
PM	**12:17**	**12:21**	**12:23**	**12:26**	**12:27**	**12:34**
	1:17	**1:21**	**1:23**	**1:26**	**1:27**	**1:34**
	2:17	**2:21**	**2:23**	**2:26**	**2:27**	**2:34**
	3:17	**3:21**	**3:23**	**3:26**	**3:27**	**3:34**
	4:17	**4:21**	**4:23**	**4:26**	**4:27**	**4:34**
	5:17	**5:21**	**5:23**	**5:26**	**5:27**	**5:34**
	6:17	**6:21**	**6:23**	**6:26**	**6:27**	**6:34**

This trip is Monday-Friday **ONLY**; Not operated on Saturday.

Inbound to DDTC / Hacia DDTC

	Mesa at Health Services of N Texas ⑦ ID: 770506	Charlotte at Ave G ⑧ ID: 770019	Eagle at Kendolph ⑨ ID: 770160	Welch at Chestnut ⑩ ID: 770165	Hickory at Elm ⑪ ID: 770028	NCTC Campus ⑫ -
AM	7:45	7:54	7:57	8:00	8:03	8:04
	8:45	8:54	8:57	9:00	9:03	9:04
	9:45	9:54	9:57	10:00	10:03	10:04
	10:45	10:54	10:57	11:00	11:03	11:04
	11:45	11:54	11:57	**12:00**	**12:03**	**12:04**
PM	**12:45**	**12:54**	**12:57**	**1:00**	**1:03**	**1:04**
	1:45	**1:54**	**1:57**	**2:00**	**2:03**	**2:04**
	2:45	**2:54**	**2:57**	**3:00**	**3:03**	**3:04**
	3:45	**3:54**	**3:57**	**4:00**	**4:03**	**4:04**
	4:45	**4:54**	**4:57**	**5:00**	**5:03**	**5:04**
	5:45	**5:54**	**5:57**	**6:00**	**6:03**	**6:04**
	6:45	**6:54**	**6:57**	**7:00**	**7:03**	**7:04**

This trip is Monday-Friday **ONLY**; Not operated on Saturday.

Denton Connect – Route 7

Service	Pre-COVID-19	March 23 Changes	May 11 Changes	August 24 Changes
Route 7	**Frequency** – 30 minutes **Average Monthly Ridership** – 7,469 **Average Daily Ridership** – 292 **Monthly Cost for Service*** – $21,860.94	Saturday schedule with additional morning run **Frequency** – 60 minutes **Ridership (3/23 – 5/10)** – 82 {daily average} **Cost of Service for 42 days* (3/23 – 5/10)** – $20,617.64	Saturday schedule with additional morning run **Frequency** – 60 minutes **Ridership (5/11 – 6/30)** – 102 {daily average} **Cost of Service for 43 days* (5/11 – 6/30)** – $21,178.27	Saturday schedule with additional morning run **Frequency** – 60 minutes **Estimated Average Monthly Cost of Service*** – $12,196.61

**Costs calculated utilizing an average of the posted FY20 fuel costs and allocating out by miles of service plus the average of the posted FY20 Salaries and Wages, Fringe Benefits, Workers Compensation Insurance and Auto Liability Insurance and allocating them by hours of service. The costs shown are not representative of a fully allocated cost.*

Denton Connect – Route 8

Route Map as of March 23, 2020 (Service currently suspended)



Pre-COVID Schedule (before March 23, 2020)

Route 8 Schedule: Monday-Friday / Horario de Ruta 8: Lunes-Viernes

Outbound to UNT / Salida hacia UNT		Inbound to DDTC / Hacia DDTC		
DDTC (Departs) ① ID: 770540	Welch at Chestnut ② ID: 770165	N Texas Blvd at Highland ③ ID: 100734	Eagle at Bernard ④ ID: 148607	Bell at Robertson ⑤ ID: 770181
5:45	5:57	6:04	6:09	6:13
6:30	6:42	6:49	6:54	6:58
7:15	7:26	7:32	7:37	7:40
7:35	7:46	7:52	7:57	8:00
7:55	8:06	8:12	8:17	8:20
8:15	8:26	8:32	8:37	8:40
8:35	8:46	8:52	8:57	9:00
8:55	9:06	9:12	9:17	9:20
9:15	9:26	9:32	9:37	9:40
9:35	9:46	9:52	9:57	10:00
9:55	10:06	10:12	10:17	10:20
10:15	10:26	10:32	10:37	10:40
10:30	10:42	10:49	10:54	10:58
11:15	11:27	11:34	11:39	11:43
12:00	12:12	12:19	12:24	12:28
12:45	12:57	1:04	1:09	1:13
1:30	1:42	1:49	1:54	1:58
2:15	2:27	2:34	2:39	2:43
2:51	3:03	3:10	3:15	3:19
3:07	3:19	3:26	3:31	3:35
3:27	3:39	3:46	3:51	3:55
3:47	3:59	4:06	4:11	4:15
4:07	4:19	4:26	4:31	4:35
4:27	4:39	4:46	4:51	4:55
4:47	4:59	5:06	5:11	5:15
5:07	5:19	5:26	5:31	5:35
5:27	5:39	5:46	5:51	5:55
5:47	5:59	6:06	6:11	6:15
6:08	6:20	6:27	6:32	6:36
6:42	6:54	7:01	7:06	7:10
7:27	7:39	7:46	7:51	7:55
8:12	8:24	8:31	8:36	8:40
8:57	9:09	9:16	9:21	9:25

Route 8 Schedule: Saturday / Horario de Ruta 8: Sábado

Outbound to UNT / Salida hacia UNT		Inbound to DDTC / Hacia DDTC		
DDTC (Departs) ① ID: 770540	Welch at Chestnut ② ID: 770165	N Texas Blvd at Highland ③ ID: 100734	Eagle at Bernard ④ ID: 148607	Bell at Robertson ⑤ ID: 770181
8:00	8:09	8:18	8:20	8:23
8:30	8:39	8:48	8:50	8:53
9:00	9:09	9:18	9:20	9:23
9:30	9:39	9:48	9:50	9:53
10:00	10:09	10:18	10:20	10:23
10:30	10:39	10:48	10:50	10:53
11:00	11:09	11:18	11:20	11:23
11:30	11:39	11:48	11:50	11:53
12:00	12:09	12:18	12:20	12:23
12:30	12:39	12:48	12:50	12:53
1:00	1:09	1:18	1:20	1:23
1:30	1:39	1:48	1:50	1:53
2:00	2:09	2:18	2:20	2:23
2:30	2:39	2:48	2:50	2:53
3:00	3:09	3:18	3:20	3:23
3:30	3:39	3:48	3:50	3:53
4:00	4:09	4:18	4:20	4:23
4:30	4:39	4:48	4:50	4:53
5:00	5:09	5:18	5:20	5:23
5:30	5:39	5:48	5:50	5:53
6:00	6:09	6:18	6:20	6:23

Post-COVID Schedule (as of March 23, 2020)

Route 8 Schedule: Monday-Saturday / Lunes-Sábado

Outbound to UNT / Salida hacia UNT		Inbound to DDTC / Hacia DDTC		
DDTC (Departs) ① ID: 770540	Welch at Chestnut ② ID: 770165	N Texas Blvd at Highland ③ ID: 100734	Eagle at Bernard ④ ID: 148607	Bell at Robertson ⑤ ID: 770181
7:30	7:39	7:46	7:50	7:53
8:00	8:09	8:16	8:20	8:23
8:30	8:39	8:46	8:50	8:53
9:00	9:09	9:16	9:20	9:23
9:30	9:39	9:46	9:50	9:53
10:00	10:09	10:16	10:20	10:23
10:30	10:39	10:46	10:50	10:53
11:00	11:09	11:16	11:20	11:23
11:30	11:39	11:46	11:50	11:53
12:00	12:09	12:16	12:20	12:23
12:30	12:39	12:46	12:50	12:53
1:00	1:09	1:16	1:20	1:23
1:30	1:39	1:46	1:50	1:53
2:00	2:09	2:16	2:20	2:23
2:30	2:39	2:46	2:50	2:53
3:00	3:09	3:16	3:20	3:23
3:30	3:39	3:46	3:50	3:53
4:00	4:09	4:16	4:20	4:23
4:30	4:39	4:46	4:50	4:53
5:00	5:09	5:16	5:20	5:23
5:30	5:39	5:46	5:50	5:53
6:00	6:09	6:16	6:20	6:23

This trip is Monday-Friday **ONLY**; Not operated on Saturday.

Denton Connect – Route 8



Passengers who previously utilized [Denton Connect Route 8] can ride [Denton Connect Route 7] to get to the majority of their destinations.



Denton Connect – Route 8

Service	Pre-COVID-19	March 23 Changes	May 11 Changes	August 24 Changes
Route 8	**Frequency** – 30 minutes **Average Monthly Ridership** – 5,785 **Average Daily Ridership** – 226 **Monthly Cost for Service*** – $19,812.10	Saturday schedule with additional morning run **Frequency** – 60-minutes **Ridership (3/23 – 5/10)** – 23 {daily average} **Cost of Service for 42 days* (3/23 – 5/10)** – $19,470.68	Suspended Service	Removal of Route

**Costs calculated utilizing an average of the posted FY20 fuel costs and allocating out by miles of service plus the average of the posted FY20 Salaries and Wages, Fringe Benefits, Workers Compensation Insurance and Auto Liability Insurance and allocating them by hours of service. The costs shown are not representative of a fully allocated cost.*

Lewisville Connect – Route 21 (Northbound)

Northbound



Pre-COVID Schedule (before March 23, 2020)

Route 21 Schedule: Monday-Friday / Horario de Ruta 21: Lunes-Viernes

Northbound to Lake Park / Hacia el norte a Lake Park

	Hebron Station (Departs) ❶ ID: 770545	Southwest at Corporate ❷ ID: 770272	Southwest at 121 ❸ ID: 770241	Bellaire at Old Orchard ❹ ID: 770249	Civic at Summit ❺ ID: 770334	Summit at Justin ❻ ID: 770565	Mill at Lakeview ❼ ID: 770567
AM	5:02	5:09	5:10	5:19	5:28	5:37	5:42
	5:32	5:39	5:40	5:49	5:58	6:07	6:12
	6:02	6:09	6:10	6:19	6:28	6:37	6:42
	6:32	6:39	6:40	6:49	6:58	7:07	7:12
	7:02	7:09	7:10	7:19	7:28	7:37	7:42
	7:30	7:37	7:38	7:47	7:56	8:05	8:10
	7:58	8:05	8:06	8:15	8:24	8:33	8:38
	8:31	8:38	8:39	8:48	8:57	9:06	9:11
	8:59	9:06	9:07	9:16	9:25	9:34	9:39
	9:41	9:48	9:49	9:56	10:03	10:09	10:12
	10:28	10:36	10:37	10:44	10:51	10:57	11:00
	11:00	11:07	11:08	11:15	11:22	11:28	11:31
	11:45	11:52	11:53	12:00	12:07	12:13	12:16
PM	12:20	12:27	12:28	12:35	12:42	12:48	12:51
	1:01	1:08	1:09	1:16	1:23	1:29	1:32
	1:41	1:48	1:49	1:56	2:03	2:09	2:12
	2:17	2:24	2:25	2:32	2:39	2:45	2:48
	3:00	3:07	3:08	3:15	3:22	3:28	3:31
	3:35	3:42	3:43	3:50	3:57	4:03	4:06
	3:50	3:58	3:59	4:07	4:14	4:21	4:24
	4:17	4:25	4:26	4:34	4:41	4:48	4:51
	4:49	4:57	4:58	5:06	5:13	5:20	5:23
	5:21	5:29	5:30	5:38	5:45	5:52	5:55
	5:48	5:56	5:57	6:05	6:12	6:19	6:22
	6:18	6:26	6:27	6:35	6:42	6:49	6:52
	6:48	6:56	6:57	7:05	7:12	7:19	7:22
	7:18	7:26	7:27	7:35	7:42	7:49	7:52
	7:48	7:56	7:57	8:05	8:12	8:19	8:22
	8:15	8:21	8:22	8:29	8:37	8:44	8:49

Route 21 Schedule: Saturday / Horario de Ruta 21: Sábado

Northbound to Lake Park / Hacia el norte a Lake Park

	Hebron Station (Departs) ❶ ID: 770545	Southwest at Corporate ❷ ID: 770272	Southwest at 121 ❸ ID: 770241	Bellaire at Old Orchard ❹ ID: 770249	Civic at Summit ❺ ID: 770334	Summit at Justin ❻ ID: 770565	Mill at Lakeview ❼ ID: 770567
AM	9:29	9:37	9:38	9:47	9:55	10:02	10:06
	10:12	10:20	10:21	10:30	10:38	10:45	10:49
	10:55	11:03	11:04	11:13	11:21	11:28	11:32
	11:38	11:46	11:47	11:56	12:04	12:11	12:15
PM	12:21	12:29	12:30	12:39	12:47	12:54	12:58
	1:04	1:12	1:13	1:22	1:30	1:37	1:41
	1:47	1:55	1:56	2:05	2:13	2:20	2:24
	2:30	2:38	2:39	2:48	2:56	3:03	3:07
	3:13	3:21	3:22	3:31	3:39	3:46	3:50
	3:56	4:04	4:05	4:14	4:22	4:29	4:33
	4:39	4:47	4:48	4:57	5:05	5:12	5:16
	5:22	5:30	5:31	5:40	5:48	5:55	5:59
	6:05	6:13	6:14	6:23	6:31	6:38	6:42

Post-COVID Schedule (as of May 11, 2020)

Northbound to Lake Park / Hacia el norte a Lake Park

Route 21 Schedule: Monday-Friday / Lunes-Viernes

	Hebron Station (Departs) ❶ ID: 770545	Southwest at Corporate ❷ ID: 770272	EB Civic at Summit ❸ ID: 770334	Mill at Lakeview ❹ ID: 770567
AM	8:26	8:35	8:54	9:06
	9:11	9:20	9:39	9:51
	9:56	10:05	10:24	10:36
	10:41	10:50	11:09	11:21
	11:26	11:35	11:54	12:06
PM	12:11	12:20	12:39	12:51
	12:56	1:05	1:24	1:36
	1:41	1:50	2:09	2:21
	2:26	2:35	2:54	3:06
	3:11	3:20	3:39	3:51
	3:56	4:05	4:24	4:36
	4:41	4:50	5:09	5:21
	5:26	5:35	5:54	6:06
	6:11	6:20	6:39	6:51
	6:56	7:05	7:24	7:36

Route 21 Schedule: Saturday / Sábado

	Hebron Station (Departs) ❶ ID: 770545	Southwest at Corporate ❷ ID: 770272	EB Civic at Summit ❸ ID: 770334	Mill at Lakeview ❹ ID: 770567
AM	8:26	8:34	8:52	9:03
	9:09	9:17	9:35	9:46
	9:52	10:00	10:18	10:29
	10:35	10:43	11:01	11:12
	11:18	11:26	11:44	11:55
PM	12:01	12:09	12:27	12:38
	12:44	12:52	1:10	1:21
	1:27	1:35	1:53	2:04
	2:10	2:18	2:36	2:47
	2:53	3:01	3:19	3:30
	3:36	3:44	4:02	4:13
	4:19	4:27	4:45	4:56
	5:02	5:10	5:28	5:39
	5:45	5:53	6:11	6:22

Lewisville Connect – Route 21 (Southbound)

Southbound

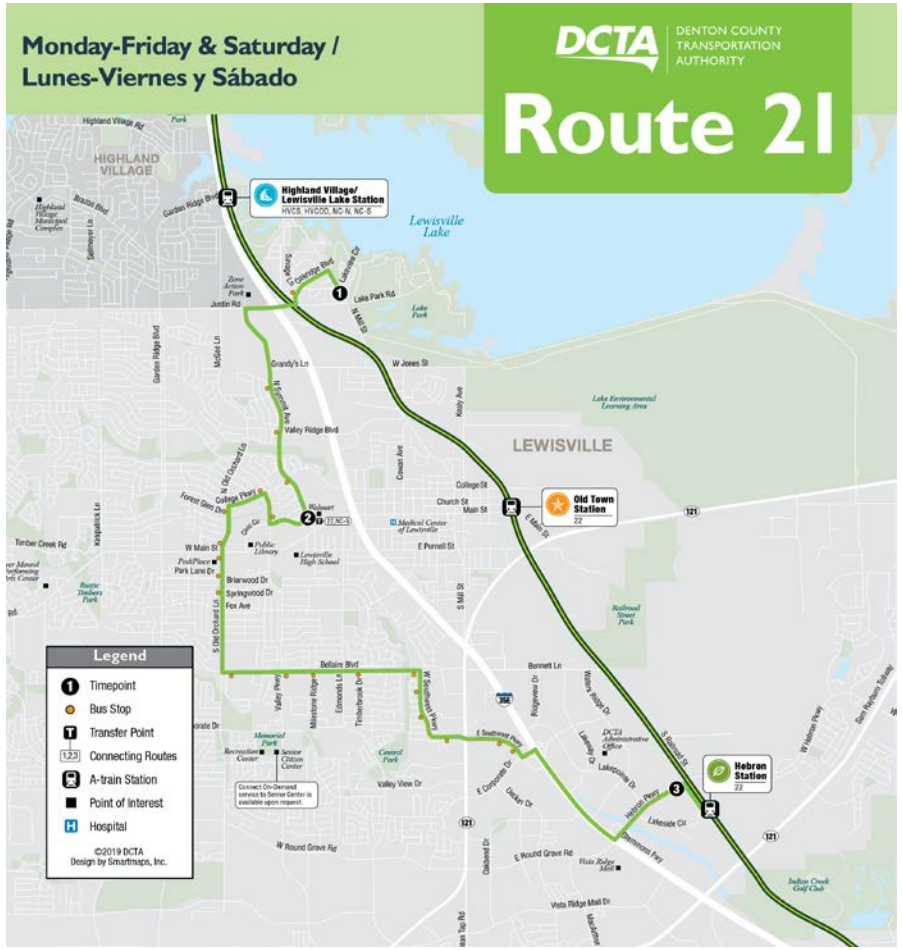

Pre-COVID Schedule (before March 23, 2020)

Route 21 Schedule: Monday-Friday / Horario de Ruta 21: Lunes-Viernes

Southbound to Hebron Station / Hacia el sur a la Estación Hebron

	Mill at Lakeview (Departs) 6 ID: 770567	Oakridge at Savage 5 ID: 770568	Summit at Civic 4 ID: 770300	Old Orchard at Bellaire 3 ID: 770307	Southwest at 121 2 ID: 770270	Hebron Pkwy at 805 1 ID: 770371
AM	5:43	5:44	5:52	6:05	6:15	6:22
	6:13	6:14	6:22	6:35	6:45	6:52
	6:46	6:47	6:55	7:08	7:18	7:25
	7:14	7:15	7:23	7:36	7:46	7:53
	7:44	7:45	7:53	8:06	8:16	8:23
	8:13	8:14	8:22	8:35	8:45	8:52
	8:41	8:42	8:50	9:03	9:13	9:20
	9:12	9:13	9:21	9:34	9:44	9:51
	9:40	9:41	9:49	10:02	10:12	10:19
	10:13	10:14	10:21	10:32	10:39	10:46
	11:01	11:02	11:09	11:20	11:27	11:34
	11:32	11:33	11:40	11:51	11:58	**12:05**
PM	**12:17**	**12:18**	**12:25**	**12:36**	**12:43**	**12:50**
	12:52	**12:53**	**1:00**	**1:11**	**1:18**	**1:25**
	1:33	**1:34**	**1:41**	**1:52**	**1:59**	**2:06**
	2:13	**2:14**	**2:21**	**2:32**	**2:39**	**2:46**
	2:49	**2:50**	**2:57**	**3:08**	**3:15**	**3:22**
	3:32	**3:33**	**3:40**	**3:51**	**3:58**	**4:05**
	4:07	**4:08**	**4:15**	**4:26**	**4:33**	**4:40**
	4:25	**4:26**	**4:34**	**4:45**	**4:53**	**5:01**
	4:52	**4:53**	**5:01**	**5:12**	**5:20**	**5:28**
	5:25	**5:26**	**5:34**	**5:45**	**5:53**	**6:01**
	5:56	**5:57**	**6:05**	**6:16**	**6:24**	**6:32**
	6:23	**6:24**	**6:32**	**6:43**	**6:51**	**6:59**
	6:53	**6:54**	**7:02**	**7:13**	**7:21**	**7:29**
	7:23	**7:24**	**7:32**	**7:43**	**7:51**	**7:59**
	7:53	**7:54**	**8:02**	**8:13**	**8:21**	**8:29**
	8:23	**8:24**	**8:32**	**8:43**	**8:51**	**8:59**
	8:50	**8:51**	**8:58**	**9:11**	**9:18**	**9:26**

Route 21 Schedule: Saturday / Horario de Ruta 21: Sábado

Southbound to Hebron Station / Hacia el sur a la Estación Hebron

	Mill at Lakeview (Departs) 6 ID: 770567	Oakridge at Savage 5 ID: 770568	Summit at Civic 4 ID: 770300	Old Orchard at Bellaire 3 ID: 770307	Southwest at 121 2 ID: 770270	Hebron Pkwy at 805 1 ID: 770371
AM	10:07	10:09	10:17	10:24	10:33	10:41
	10:54	10:56	11:04	11:11	11:20	11:28
	11:37	11:39	11:47	11:54	**12:03**	**12:11**
PM	**12:20**	**12:22**	**12:30**	**12:37**	**12:46**	**12:54**
	1:03	**1:05**	**1:13**	**1:20**	**1:29**	**1:37**
	1:44	**1:46**	**1:54**	**2:01**	**2:10**	**2:18**
	2:29	**2:31**	**2:39**	**2:46**	**2:55**	**3:03**
	3:12	**3:14**	**3:22**	**3:29**	**3:38**	**3:46**
	3:55	**3:57**	**4:05**	**4:12**	**4:21**	**4:29**
	4:38	**4:40**	**4:48**	**4:55**	**5:04**	**5:12**
	5:21	**5:23**	**5:31**	**5:38**	**5:47**	**5:55**
	6:04	**6:06**	**6:14**	**6:21**	**6:30**	**6:38**
	6:47	**6:49**	**6:57**	**7:04**	**7:13**	**7:21**

AUGUST 2019

Post-COVID Schedule (as of May 11, 2020)

Southbound to Hebron / Hacia el sur a la Estación Hebron

Route 21 Schedule: Monday-Friday / Lunes-Viernes

	NB Mill at Lakeview 1 ID: 770567	Summit at Civic 2 ID: 770300	EB Hebron Pkwy at 805 3 ID: 770371
AM	9:11	9:22	9:48
	9:56	10:07	10:33
	10:41	10:52	11:18
	11:26	11:37	12:03
PM	12:11	12:22	12:48
	12:56	1:07	1:33
	1:41	1:52	2:18
	2:26	2:37	3:03
	3:11	3:22	3:48
	3:56	4:07	4:33
	4:41	4:52	5:18
	5:26	5:37	6:03
	6:11	6:22	6:48
	6:56	7:07	7:33
	7:41	7:52	8:18

Route 21 Schedule: Saturday / Sábado

	NB Mill at Lakeview 1 ID: 770567	Summit at Civic 2 ID: 770300	EB Hebron Pkwy at 805 3 ID: 770371
AM	9:09	9:19	9:43
	9:52	10:02	10:26
	10:35	10:45	11:09
	11:18	11:28	11:52
PM	12:01	12:11	12:35
	12:44	12:54	1:18
	1:27	1:37	2:01
	2:10	2:20	2:44
	2:53	3:03	3:27
	3:36	3:46	4:10
	4:19	4:29	4:53
	5:02	5:12	5:36
	5:45	5:55	6:19
	6:28	6:38	7:02

Lewisville Connect – Route 21

Service	Pre-COVID-19	March 23 Changes	May 11 Changes	August 24 Changes
Route 21	**Frequency** – 35 Minutes **Average Monthly Ridership** – 3,908 **Average Daily Ridership** – 153 **Monthly Cost for Service*** – $31,190.50	Saturday schedule with additional morning run **Frequency** – 45-minutes **Ridership (3/23 – 5/10)** – 56 {daily average} **Cost of Service for 42 days* (3/23 – 5/10)** – $40,364.70	Saturday schedule with additional morning run **Frequency** – 45-minutes **Ridership (5/11 – 6/30) –** 82 {daily average} **Cost of Service for 43 days* (5/11 – 6/30)** – $40,596.33	Saturday schedule with additional morning run **Frequency** – 45-minutes **Estimated Average Monthly Cost of Service*** – $23,609.42

**Costs calculated utilizing an average of the posted FY20 fuel costs and allocating out by miles of service plus the average of the posted FY20 Salaries and Wages, Fringe Benefits, Workers Compensation Insurance and Auto Liability Insurance and allocating them by hours of service. The costs shown are not representative of a fully allocated cost.*

Lewisville Connect – Route 22 (Northbound)

Northbound

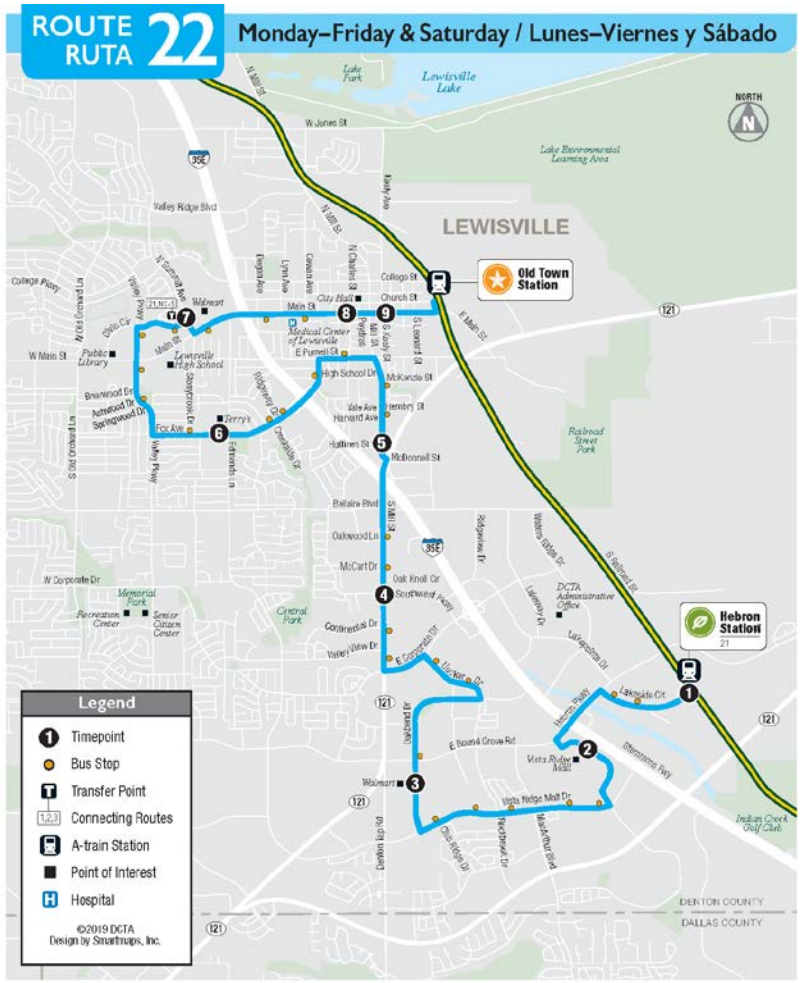

Pre-COVID Schedule (before March 23, 2020)

Route 22 Schedule: Monday-Friday / Horario de Ruta 22: Lunes-Viernes

Northbound to Old Town Station / Hacia el norte a la Estación Old Town

	Hebron Station (Departs) ❶ ID: 770545	Vista Ridge Mall ❷ ID: 770278	Oakbend at Walmart ❸ ID: 770284	121 at Southwest ❹ ID: 770289	Mill at Huffines ❺ ID: 770292	Fox at Edmonds ❻ ID: 770330	Civic at Summit ❼ ID: 770334	Main at Charles ❽ ID: 770338	Main at Kealy ❾ —
AM	6:12	6:18	6:27	6:36	6:40	6:48	6:53	6:58	7:00
	6:42	6:48	6:57	7:06	7:10	7:18	7:23	7:28	7:30
	7:12	7:18	7:27	7:36	7:40	7:48	7:53	7:58	8:00
	7:42	7:48	7:57	8:06	8:10	8:18	8:23	8:28	8:30
	8:12	8:18	8:27	8:36	8:40	8:48	8:53	8:58	9:00
	8:42	8:48	8:57	9:06	9:10	9:18	9:23	9:28	9:30
	9:06	9:12	9:22	9:31	9:35	9:43	9:49	9:54	9:56
	9:42	9:48	9:58	10:07	10:11	10:19	10:25	10:30	10:32
	10:06	10:12	10:22	10:31	10:35	10:43	10:49	10:54	10:56
	11:06	11:12	11:22	11:31	11:35	11:43	11:49	11:54	11:56
PM	12:06	12:12	12:22	12:31	12:35	12:43	12:49	12:54	12:56
	1:06	1:12	1:22	1:31	1:35	1:43	1:49	1:54	1:56
	2:06	2:12	2:22	2:31	2:35	2:43	2:49	2:54	2:56
	3:06	3:12	3:22	3:31	3:35	3:43	3:49	3:54	3:56
	3:24	3:30	3:40	3:49	3:53	4:01	4:07	4:12	4:14
	4:01	4:07	4:17	4:26	4:30	4:38	4:44	4:49	4:51
	4:18	4:24	4:34	4:43	4:47	4:55	5:01	5:06	5:08
	4:56	5:02	5:12	5:21	5:25	5:33	5:39	5:44	5:46
	5:18	5:24	5:34	5:43	5:47	5:55	6:01	6:06	6:08
	5:48	5:54	6:04	6:13	6:17	6:25	6:31	6:36	6:38
	6:18	6:24	6:34	6:43	6:47	6:55	7:01	7:06	7:08
	6:45	6:51	7:00	7:09	7:13	7:21	7:26	7:31	7:33
	7:43	7:49	7:58	8:07	8:11	8:19	8:24	8:29	8:31

Route 22 Schedule: Saturday / Horario de Ruta 22: Sábado

Northbound to Old Town Station / Hacia el norte a la Estación Old Town

	Hebron Station (Departs) ❶ ID: 770545	Vista Ridge Mall ❷ ID: 770278	Oakbend at Walmart ❸ ID: 770284	121 at Southwest ❹ ID: 770289	Mill at Huffines ❺ ID: 770292	Fox at Edmonds ❻ ID: 770330	Civic at Summit ❼ ID: 770334	Main at Charles ❽ ID: 770338	Main at Kealy ❾ —
AM	8:45	8:51	9:00	9:09	9:13	9:21	9:26	9:31	9:32
	9:45	9:51	10:00	10:09	10:13	10:21	10:26	10:31	10:32
	10:45	10:51	11:00	11:09	11:13	11:21	11:26	11:31	11:32
	11:45	11:51	12:00	12:09	12:13	12:21	12:26	12:31	12:32
PM	12:45	12:51	1:00	1:09	1:13	1:21	1:26	1:31	1:32
	1:45	1:51	2:00	2:09	2:13	2:21	2:26	2:31	2:32
	2:45	2:51	3:00	3:09	3:13	3:21	3:26	3:31	3:32
	3:45	3:51	4:00	4:09	4:13	4:21	4:26	4:31	4:32
	4:45	4:51	5:00	5:09	5:13	5:21	5:26	5:31	5:32
	5:45	5:51	6:00	6:09	6:13	6:21	6:26	6:31	6:32

Post-COVID Schedule (as of May 11, 2020)

Northbound to Old Town Station / Hacia el norte a la Estación Old Town

Route 22 Schedule: Monday-Friday / Lunes-Viernes

	Hebron (Departs) ❶ ID: 770545	Vista Ridge Mall ❷ ID: 770278	Oakbend at Walmart ❸ ID: 770284	121 at Southwest ❹ ID: 770289	Mill at Huffiness ❺ ID: 770292	Fox at Edmonds ❻ ID: 770330	Civic at Summit ❼ ID: 770334	Main at Charles ❽ ID: 770338	Main at Kealy ❾ -
AM	7:45	7:51	8:00	8:09	8:13	8:21	8:27	8:31	8:32
	8:45	8:51	9:00	9:09	9:13	9:21	9:27	9:31	9:32
	9:45	9:51	10:00	10:09	10:13	10:21	10:27	10:31	10:32
	10:45	10:51	11:00	11:09	11:13	11:21	11:27	11:31	11:32
	11:45	11:51	12:00	12:09	12:13	12:21	12:27	12:31	12:32
PM	12:45	12:51	1:00	1:09	1:13	1:21	1:27	1:31	1:32
	1:45	1:51	2:00	2:09	2:13	2:21	2:27	2:31	2:32
	2:45	2:51	3:00	3:09	3:13	3:21	3:27	3:31	3:32
	3:45	3:51	4:00	4:09	4:13	4:21	4:27	4:31	4:32
	4:45	4:51	5:00	5:09	5:13	5:21	5:27	5:31	5:32
	5:45	5:51	6:00	6:09	6:13	6:21	6:27	6:31	6:32
	6:45	6:51	7:00	7:09	7:13	7:21	7:27	7:31	7:32

Route 22 Schedule: Saturday / Sábado

	Hebron (Departs) ❶ ID: 770545	Vista Ridge Mall ❷ ID: 770278	Oakbend at Walmart ❸ ID: 770284	121 at Southwest ❹ ID: 770289	Mill at Huffiness ❺ ID: 770292	Fox at Edmonds ❻ ID: 770330	Civic at Summit ❼ ID: 770334	Main at Charles ❽ ID: 770338	Main at Kealy ❾ -
AM	8:45	8:51	9:00	9:09	9:13	9:20	9:26	9:30	9:31
	9:45	9:51	10:00	10:09	10:13	10:20	10:26	10:30	10:31
	10:45	10:51	11:00	11:09	11:13	11:20	11:26	11:30	11:31
	11:45	11:51	12:00	12:09	12:13	12:20	12:26	12:30	12:31
PM	12:45	12:51	1:00	1:09	1:13	1:20	1:26	1:30	1:31
	1:45	1:51	2:00	2:09	2:13	2:20	2:26	2:30	2:31
	2:45	2:51	3:00	3:09	3:13	3:20	3:26	3:30	3:31
	3:45	3:51	4:00	4:09	4:13	4:20	4:26	4:30	4:31
	4:45	4:51	5:00	5:09	5:13	5:20	5:26	5:30	5:31
	5:45	5:51	6:00	6:09	6:13	6:20	6:26	6:31	6:32

Lewisville Connect – Route 22 (Southbound)

Southbound

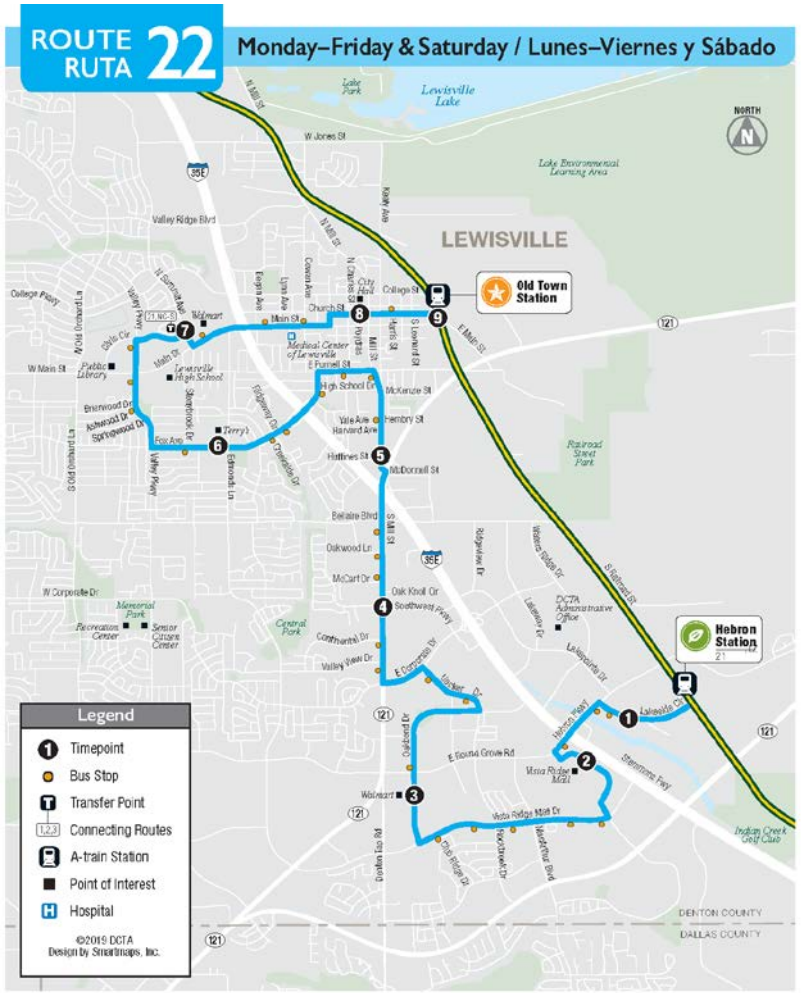

Pre-COVID Schedule (before March 23, 2020)

Route 22 Schedule: Monday-Friday / Horario de Ruta 22: Lunes-Viernes

Southbound to Hebron Station / Hacia el sur a la Estación Hebron

	Old Town Station (Departs) 9 ID: 770543	Church at Poydras 8 ID: 770296	Summit at Civic 7 ID: 770300	Fox at Edmonds 6 ID: 770262	Mill at Huffines 5 ID: 770267	121 at Southwest 4 ID: 770341	Oakbend at Walmart 3 ID: 770347	Vista Ridge Mall 2 ID: 770278	Lakeside Circle at Edgewater 1 ID: 770375
AM	7:13	7:16	7:20	7:27	7:34	7:38	7:48	7:49	8:00
	7:43	7:46	7:50	7:57	8:04	8:08	8:18	8:19	8:30
	8:13	8:16	8:20	8:27	8:34	8:38	8:48	8:49	9:00
	8:43	8:46	8:50	8:57	9:04	9:08	9:18	9:19	9:30
	9:13	9:16	9:20	9:27	9:34	9:38	9:48	9:49	10:00
	9:43	9:46	9:50	9:57	10:04	10:08	10:18	10:19	10:30
	10:07	10:10	10:15	10:21	10:29	10:34	10:43	10:45	10:56
	10:45	10:48	10:53	10:59	11:07	11:12	11:21	11:23	11:34
	11:07	11:10	11:15	11:21	11:29	11:34	11:43	11:45	11:56
PM	12:07	12:10	12:15	12:21	12:29	12:34	12:43	12:45	12:56
	1:07	1:10	1:15	1:21	1:29	1:34	1:43	1:45	1:56
	2:07	2:10	2:15	2:21	2:29	2:34	2:43	2:45	2:56
	3:07	3:10	3:15	3:21	3:29	3:34	3:43	3:45	3:56
	4:01	4:04	4:09	4:15	4:23	4:28	4:37	4:39	4:50
	4:23	4:26	4:31	4:37	4:45	4:50	4:59	5:01	5:12
	4:53	4:56	5:01	5:07	5:15	5:20	5:29	5:31	5:42
	5:17	5:20	5:25	5:31	5:39	5:43	5:53	5:54	6:06
	5:51	5:54	5:59	6:05	6:13	6:17	6:27	6:28	6:40
	6:17	6:20	6:25	6:31	6:39	6:43	6:53	6:54	7:06
	6:47	6:50	6:55	7:01	7:09	7:13	7:23	7:24	7:36
	7:17	7:20	7:25	7:31	7:39	7:43	7:53	7:54	8:06
	7:41	7:44	7:48	7:55	8:02	8:06	8:16	8:17	8:28
	8:41	8:44	8:48	8:55	9:02	9:06	9:16	9:17	9:28

Route 22 Schedule: Saturday / Horario de Ruta 22: Sábado

Southbound to Hebron Station / Hacia el sur a la Estación Hebron

	Old Town Station (Departs) 9 ID: 770543	Church at Poydras 8 ID: 770296	Summit at Civic 7 ID: 770300	Fox at Edmonds 6 ID: 770262	Mill at Huffines 5 ID: 770267	121 at Southwest 4 ID: 770341	Oakbend at Walmart 3 ID: 770347	Vista Ridge Mall 2 ID: 770278	Lakeside Circle at Edgewater 1 ID: 770375
AM	9:46	9:49	9:54	10:00	10:07	10:11	10:20	10:22	10:33
	10:46	10:49	10:54	11:00	11:07	11:11	11:20	11:22	11:33
	11:46	11:49	11:54	12:00	12:07	12:11	12:20	12:22	12:33
PM	12:46	12:49	12:54	1:00	1:07	1:11	1:20	1:22	1:33
	1:46	1:49	1:54	2:00	2:07	2:11	2:20	2:22	2:33
	2:46	2:49	2:54	3:00	3:07	3:11	3:20	3:22	3:33
	3:46	3:49	3:54	4:00	4:07	4:11	4:20	4:22	4:33
	4:46	4:49	4:54	5:00	5:07	5:11	5:20	5:22	5:33
	5:46	5:49	5:54	6:00	6:07	6:11	6:20	6:22	6:33
	6:46	6:49	6:54	7:00	7:07	7:11	7:20	7:22	7:33

Post-COVID Schedule (as of May 11, 2020)

Southbound to Hebron Station / Hacia el sur a la Estación Hebron

Route 22 Schedule: Monday-Friday / Lunes-Viernes

	Old Town Station (Departs) 9 ID: 770543	Church at Poydras 8 ID: 770296	Summit at Civic 7 ID: 770300	Fox at Edmonds 6 ID: 770262	Mill at Huffines 5 ID: 770267	121 at Southwest 4 ID: 770341	Oakbend at Walmart 3 ID: 770347	Vista Ridge Mall 2 ID: 770278	Lakeside Circle at Edgewater 1 ID: 770375
AM	8:46	8:49	8:54	9:00	9:07	9:12	9:21	9:29	9:34
	9:46	9:49	9:54	10:00	10:07	10:12	10:21	10:29	10:34
	10:46	10:49	10:54	11:00	11:07	11:12	11:21	11:29	11:34
	11:46	11:49	11:54	12:00	12:07	12:12	12:21	12:29	12:34
PM	12:46	12:49	12:54	1:00	1:07	1:12	1:21	1:29	1:34
	1:46	1:49	1:54	2:00	2:07	2:12	2:21	2:29	2:34
	2:46	2:49	2:54	3:00	3:07	3:12	3:21	3:29	3:34
	3:46	3:49	3:54	4:00	4:07	4:12	4:21	4:29	4:34
	4:46	4:49	4:54	5:00	5:07	5:12	5:21	5:29	5:34
	5:46	5:49	5:54	6:00	6:07	6:12	6:21	6:29	6:34
	6:46	6:49	6:54	7:00	7:07	7:12	7:21	7:29	7:34
	7:46	7:49	7:54	8:00	8:07	8:12	8:21	8:29	8:34

Route 22 Schedule: Saturday / Sábado

	Old Town Station (Departs) 9 ID: 770543	Church at Poydras 8 ID: 770296	Summit at Civic 7 ID: 770300	Fox at Edmonds 6 ID: 770262	Mill at Huffines 5 ID: 770267	121 at Southwest 4 ID: 770341	Oakbend at Walmart 3 ID: 770347	Vista Ridge Mall 2 ID: 770278	Lakeside Circle at Edgewater 1 ID: 770375
AM	9:46	9:49	9:54	10:00	10:07	10:11	10:20	10:29	10:33
	10:46	10:49	10:54	11:00	11:07	11:11	11:20	11:29	11:33
	11:46	11:49	11:54	12:00	12:07	12:11	12:20	12:29	12:33
PM	12:46	12:49	12:54	1:00	1:07	1:11	1:20	1:29	1:33
	1:46	1:49	1:54	2:00	2:07	2:11	2:20	2:29	2:33
	2:46	2:49	2:54	3:00	3:07	3:11	3:20	3:29	3:33
	3:46	3:49	3:54	4:00	4:07	4:11	4:20	4:29	4:33
	4:46	4:49	4:54	5:00	5:07	5:11	5:20	5:29	5:33
	5:46	5:49	5:54	6:00	6:07	6:11	6:20	6:29	6:33
	6:46	6:49	6:54	7:00	7:07	7:11	7:20	7:29	7:33

Lewisville Connect – Route 22

Service	Pre-COVID-19	March 23 Changes	May 11 Changes	August 24 Changes
Route 22	**Frequency** – 30 Minutes **Average Monthly Ridership** – 5,310 **Average Daily Ridership** – 207 **Monthly Cost for Service*** – $40,697.08	Saturday schedule with additional morning run **Frequency** – 60-minutes **Ridership (3/23 – 5/10)** – 64 {daily average} **Cost of Service for 42 days* (3/23 – 5/10)** – $41,158.58	Saturday schedule with additional morning run **Frequency** – 60-minutes **Ridership (5/11 – 6/30)** – 82 {daily average} **Cost of Service for 43 days* (5/11 – 6/30)** – $41,779.19	Saturday schedule with additional morning run **Frequency** – 60-minutes **Estimated Average Monthly Cost of Service*** – $24,301.58

**Costs calculated utilizing an average of the posted FY20 fuel costs and allocating out by miles of service plus the average of the posted FY20 Salaries and Wages, Fringe Benefits, Workers Compensation Insurance and Auto Liability Insurance and allocating them by hours of service. The costs shown are not representative of a fully allocated cost.*

Highland Village Connect Shuttle

Route Map and Schedule (Service Discontinued effective March 16, 2020)

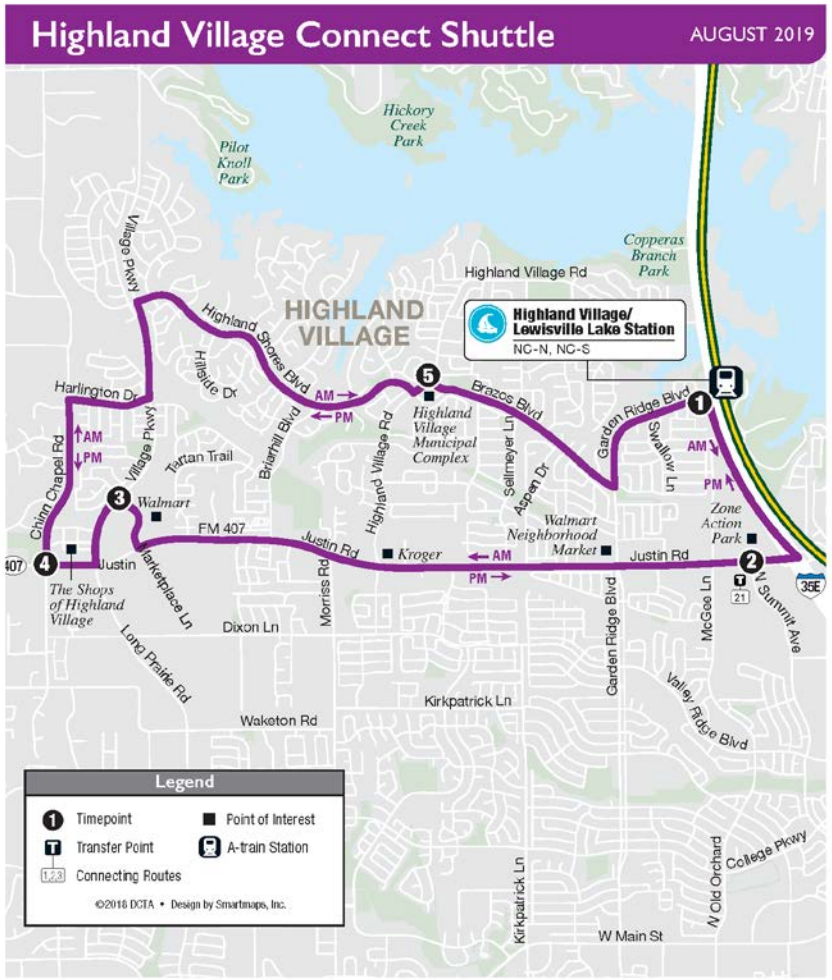

HVCS Schedule: Monday-Friday / Horario de HVCS: Lunes-Viernes

Morning Route (Clockwise) / Ruta de la mañana (corre en la dirección del reloj)

	Highland Village Station (Departs) ❶ ID: 124101	Justin at Summit ❷ ID: 124106	Village Pkwy at Marketplace ❸ ID: 124104	Chinn Chapel at 407 ❹ ID: 124108	Highland Village Municipal Complex ❺ ID: 124102	Highland Village Station ❶ ID: 124101
AM	–	–	–	–	5:09	5:12
	–	–	–	–	5:39	5:42
	5:27	5:33	5:41	5:44	6:09	6:12
	5:57	6:03	6:11	6:14	6:39	6:42
	6:27	6:33	6:41	6:44	7:09	7:12
	6:57	7:03	7:11	7:14	7:39	7:42
	7:27	7:33	7:41	7:44	8:09	8:12
	7:57	8:03	8:11	8:14	8:39	8:42
	8:27	8:33	8:41	8:44	9:09	9:12
	8:57	9:03	9:11	9:14	–	–
	9:27	9:33	9:41	9:44	–	–

Afternoon Route (Counterclockwise) / Ruta de la tarde (corre contra la dirección del reloj)

	Highland Village Station (Departs) ❶ ID: 124101	Highland Village Municipal Complex ❺ ID: 124102	Chinn Chapel at 407 ❹ ID: 124103	Village Pkwy at Marketplace ❸ ID: 124107	Justin at Summit ❷ ID: 124105	Highland Village Station ❶ ID: 124101
PM	2:58	3:04	3:19	3:22	3:29	3:34
	3:28	3:34	3:49	3:52	3:59	4:04
	3:58	4:04	4:19	4:22	4:29	4:34
	4:28	4:34	4:49	4:52	4:59	5:04
	4:58	5:04	5:19	5:22	5:29	5:34
	5:28	5:34	5:49	5:52	5:59	6:04
	5:58	6:04	6:19	6:22	6:29	6:34
	6:28	6:34	6:49	6:52	6:59	7:04
	6:58	7:04	7:19	7:22	7:29	7:34
	7:28	7:34	7:49	7:52	7:59	8:04
	7:58	8:04	8:19	8:22	8:29	8:34
	8:28	8:34	8:49	8:52	8:59	9:04

Highland Village Connect Shuttle

Service	Pre-COVID-19	March 23 Changes	May 11 Changes	August 24 Changes
Highland Village Connect Shuttle	**Frequency** – 32 minutes **Average Monthly Ridership** – 173 **Average Daily Ridership** – 8 **Monthly Cost for Service*** – $51,759.46	Discontinued service	N/A	N/A

**Costs calculated utilizing an average of the posted FY20 fuel costs and allocating out by miles of service plus the average of the posted FY20 Salaries and Wages, Fringe Benefits, Workers Compensation Insurance and Auto Liability Insurance and allocating them by hours of service. The costs shown are not representative of a fully allocated cost.*

ON-DEMAND SERVICE

Evening On-Demand – DDTC

Hours of Operation
- Downtown Denton Transit Center Station: 6:20 p.m. - 9:40 p.m.
- Hebron Station: 6 a.m. - 9:40 p.m.

Cost to Ride
- A local or regional pass is accepted for these trips

How to Book a Trip
- Download the DCTA On-Demand app by searching Apple and Google Play stores for “DCTA On-Demand”
- Open the DCTA On-Demand app on your mobile device.
- Enter your destination in the “Where to?” box. When selecting your pickup location, choose the A-train station of choice. When selecting your drop-off location, enter in an address for your specific location.
- Add in any additional information by tapping on the “Passenger” or “Wheelchair” icon and tap “Request Ride” when ready. If you want to schedule your trip in advance, you can select a later time and/or date by tapping “Schedule” in the lower right corner. When you’re ready, tap “Request Ride.”
- Receive real-time updates of pick-up time via text and the mobile app.

Evening On-Demand – DDTC & Hebron Stations

On-Demand Zone Map

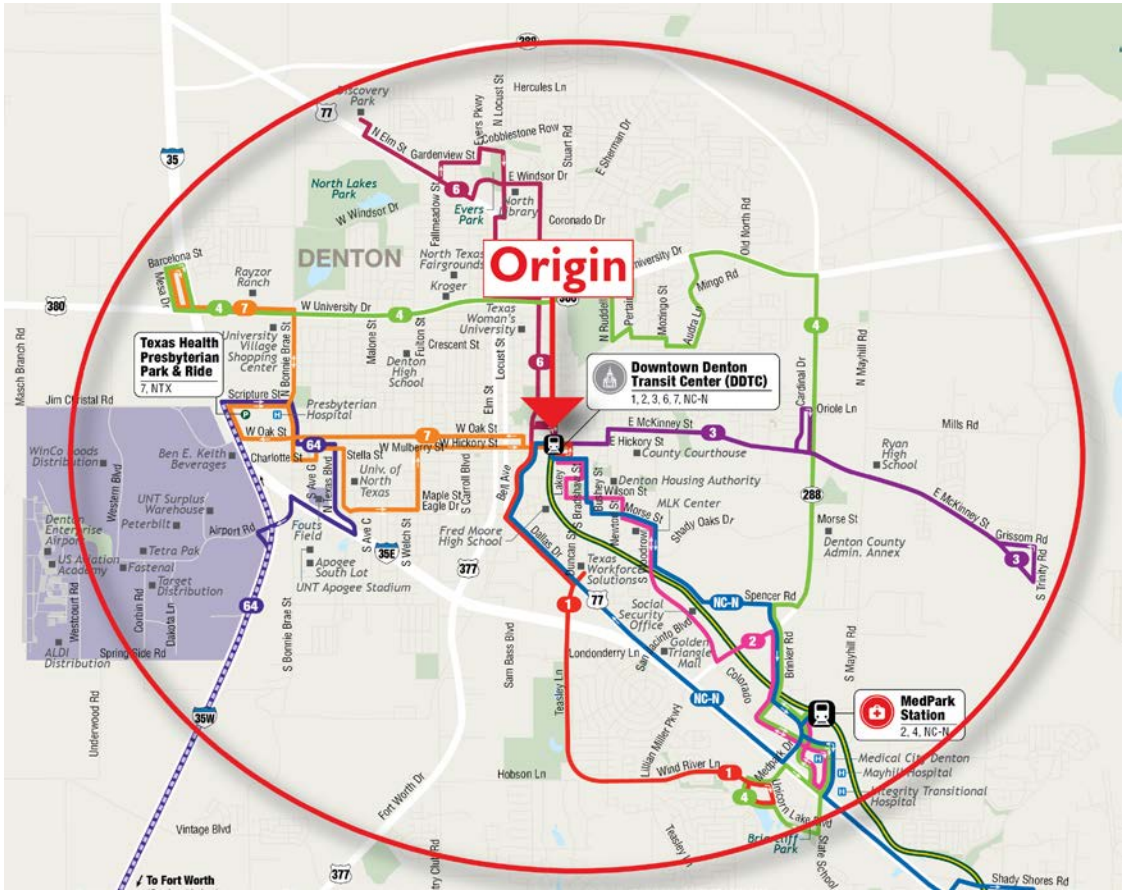

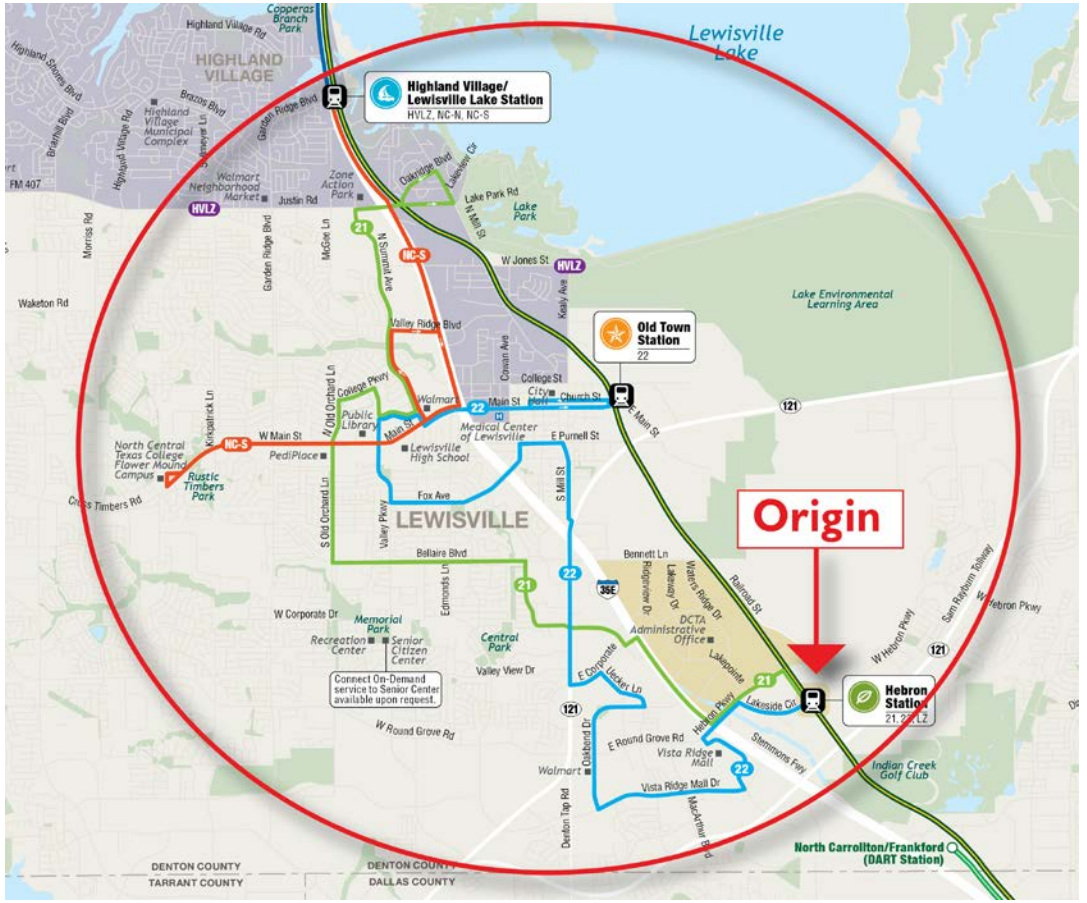

Evening On-Demand – DDTC

Service	Pre-COVID-19	March 23 Changes	May 11 Changes	August 24 Changes
Evening On-Demand Service (DDTC)	N/A	**Average Monthly Ridership** – 71 **Average Daily Ridership** – 3 **Average Monthly Cost for Service*** – $4,332.74	**Average Monthly Ridership** – 77 **Average Daily Ridership** – 4 **Average Monthly Cost for Service*** – $3,577.64	Make permanent **Average Monthly Cost for Service*** - $3,577.64

**Costs calculated utilizing an average of the posted FY20 fuel costs and allocating out by miles of service plus the average of the posted FY20 Salaries and Wages, Fringe Benefits, Workers Compensation Insurance and Auto Liability Insurance and allocating them by hours of service. The costs shown are not representative of a fully allocated cost.*

Evening On-Demand – Hebron Station

Service	Pre-COVID-19	March 23 Changes	May 11 Changes	August 24 Changes
Evening On-Demand Service (Hebron)	N/A	**Average Monthly Ridership** – 62 **Average Daily Ridership** – 3 **Average Monthly Cost for Service*** – $6,350	**Average Monthly Ridership** – 108 **Average Daily Ridership** – 5 **May 2020 Cost Data –** unavailable at time of report submission	Make permanent **Average Monthly Cost for Service*** - $6,350

**Costs are based on a rolling average of Lewisville Lakeway On-Demand Service pre- and post-launch of the new evening on-demand service. Future cost of service is dependent on usage.*

UNT CAMPUS SHUTTLE SERVICE (Fall 2020)

DCTA

UNT 2020/2021 Cost of Service

- Total UNT Budget - $2.9M
  - $2.4M - Operating Budget
  - $500K – CARES Act Funding
- Total Cost of Service (approved proposal) - $2,489,470.41
  - Service Hours + Fuel - $2,072,485.88
  - Fuel - $295,984.53
  - Connect Access Fee - $49,000
  - Late-Night Lyft Service - $72,000
  - Note: There is roughly $400K left in UNT's budget to address increased service levels for the Spring 2021 semester. When Spring 2021 service levels are determined, the overall cost of service will increase.
- Cost for service varies from month-to-month and semester-to-semester
- Dates of Service
  - Full Service
    - Fall Semester – August 24 – November 25, 2020
    - Spring Semester – January 11 – May 6, 2021
  - Abbreviated Service
    - Fall Semester – November 30 – December 18, 2020
    - Summer Semester – May 7 – August 6, 2021
- NOTE: UNT is billed monthly based on actuals

UNT 2019/2020 Cost of Service

- The 2019/2020 UNT budget is provided below as a comparison to the recommended 2020/2021 service plan
- Total Budget for UNT Services - $3,434,238 (2020/2021 budget was decreased by 14.7%)
- Service Hours + Fuel - $3,313,238 (2020/2021 service hours and fuel were decreased by 37%)
  - Service Hours – $2,970,502
  - Fuel - $342,736
  - Connect Access Fee - $49,000
  - Late-Night Lyft Service - $72,000
- NOTE: UNT is billed monthly based on actuals

Parking Express Union (PEU) – NEW for Fall 2020





Effective August 24, 2020:

- Will operate one (1) bus from 7:30 a.m. until 3:15 p.m. each scheduled weekday
- Frequency of 30 minutes
- This route and schedule have been approved by UNT leadership

Parking Express Victory (PEV) – NEW for Fall 2020





Effective August 24, 2020:

- Will operate one (1) bus from 7:30 a.m. until 3:15 p.m. each scheduled weekday
- Frequency of 30 minutes
- This route and schedule have been approved by UNT leadership

Mean Green (MG)

Pre-COVID (before March 23, 2020)



MG Schedule: Monday-Friday / Horario de MG: Lunes-Viernes

	Outbound to Fouts Field / Salida hacia Fouts Field				Inbound to Normal St / Hacia Normal St			
	Union Transfer ❶	Maple Hall ❷	Honors Hall ❸	Fouts Field Transfer ❹	Pohl Recreation Center ❺	College Inn/ EESAT ❻	GAB ❼	Oak at Normal ❽
AM	7:30	7:33	7:34	7:35	7:36	7:37	7:38	7:39
	7:40	7:43	7:44	7:45	7:46	7:47	7:48	7:49
	7:50	7:53	7:54	7:55	7:56	7:57	7:58	7:59
	8:00	8:03	8:04	8:05	8:06	8:07	8:08	8:09
	8:10	8:13	8:14	8:15	8:16	8:17	8:18	8:19
	8:20	8:23	8:24	8:25	8:26	8:27	8:28	8:29
	8:30	8:33	8:34	8:35	8:36	8:37	8:38	8:39
	8:40	8:43	8:44	8:45	8:46	8:47	8:48	8:49
	8:50	8:53	8:54	8:55	8:56	8:57	8:58	8:59
	9:00	9:03	9:04	9:05	9:06	9:07	9:08	9:09
	9:10	9:13	9:14	9:15	9:16	9:17	9:18	9:19
	9:20	9:23	9:24	9:25	9:26	9:27	9:28	9:29
	9:30	9:33	9:34	9:35	9:36	9:37	9:38	9:39
	9:40	9:43	9:44	9:45	9:46	9:47	9:48	9:49
	9:50	9:53	9:54	9:55	9:56	9:57	9:58	9:59
	10:00	10:03	10:04	10:05	10:06	10:07	10:08	10:09
	10:10	10:13	10:14	10:15	10:16	10:17	10:18	10:19
	10:20	10:23	10:24	10:25	10:26	10:27	10:28	10:29
	10:30	10:33	10:34	10:35	10:36	10:37	10:38	10:39
	10:40	10:43	10:44	10:45	10:46	10:47	10:48	10:49
	10:50	10:53	10:54	10:55	10:56	10:57	10:58	10:59
	11:00	11:03	11:04	11:05	11:06	11:07	11:08	11:09
	11:10	11:13	11:14	11:15	11:16	11:17	11:18	11:19
	11:20	11:23	11:24	11:25	11:26	11:27	11:28	11:29
	11:30	11:33	11:34	11:35	11:36	11:37	11:38	11:39
	11:40	11:43	11:44	11:45	11:46	11:47	11:48	11:49
	11:50	11:53	11:54	11:55	11:56	11:57	11:58	11:59
PM	12:00	12:03	12:04	12:05	12:06	12:07	12:08	12:09
	12:10	12:13	12:14	12:15	12:16	12:17	12:18	12:19
	12:20	12:23	12:24	12:25	12:26	12:27	12:28	12:29
	12:30	12:33	12:34	12:35	12:36	12:37	12:38	12:39
	12:40	12:43	12:44	12:45	12:46	12:47	12:48	12:49
	12:50	12:53	12:54	12:55	12:56	12:57	12:58	12:59
	1:00	1:03	1:04	1:05	1:06	1:07	1:08	1:09
	1:10	1:13	1:14	1:15	1:16	1:17	1:18	1:19
	1:20	1:23	1:24	1:25	1:26	1:27	1:28	1:29
	1:30	1:33	1:34	1:35	1:36	1:37	1:38	1:39
	1:40	1:43	1:44	1:45	1:46	1:47	1:48	1:49
	1:50	1:53	1:54	1:55	1:56	1:57	1:58	1:59
	2:00	2:03	2:04	2:05	2:06	2:07	2:08	2:09
	2:10	2:13	2:14	2:15	2:16	2:17	2:18	2:19
	2:20	2:23	2:24	2:25	2:26	2:27	2:28	2:29
	2:30	2:33	2:34	2:35	2:36	2:37	2:38	2:39
	2:40	2:43	2:44	2:45	2:46	2:47	2:48	2:49
	2:50	2:53	2:54	2:55	2:56	2:57	2:58	2:59
	3:00	3:03	3:04	3:05	3:06	3:07	3:08	3:09
	3:10	3:13	3:14	3:15	3:16	3:17	3:18	3:19
	3:20	3:23	3:24	3:25	3:26	3:27	3:28	3:29
	3:30	3:33	3:34	3:35	3:36	3:37	3:38	3:39
	3:40	3:43	3:44	3:45	3:46	3:47	3:48	3:49
	3:50	3:53	3:54	3:55	3:56	3:57	3:58	3:59
	4:00	4:03	4:04	4:05	4:06	4:07	4:08	4:09
	4:10	4:13	4:14	4:15	4:16	4:17	4:18	4:19
	4:20	4:23	4:24	4:25	4:26	4:27	4:28	4:29
	4:30	4:33	4:34	4:35	4:36	4:37	4:38	4:39
	4:40	4:43	4:44	4:45	4:46	4:47	4:48	4:49
	4:50	4:53	4:54	4:55	4:56	4:57	4:58	4:59
	5:00	5:03	5:04	5:05	5:06	5:07	5:08	5:09
	5:10	5:13	5:14	5:15	5:16	5:17	5:18	5:19
	5:20	5:23	5:24	5:25	5:26	5:27	5:28	5:29
	5:30	5:33	5:34	5:35	5:36	5:37	5:38	5:39

Post-COVID (before May 11, 2020)



MG114 Schedule: Monday-Friday

All times are departure times

	Union Transfer ❶	WB Maple at Ave A ❷	Maple Hall ❸	Honors Hall ❹	Fouts Field Transfer ❺	Fry St Area ❻
AM	7:10	7:13	7:14	7:15	7:17	7:23
	7:33	7:36	7:37	7:38	7:40	7:46
	7:56	7:59	8:00	8:01	8:03	8:09
	8:19	8:22	8:23	8:24	8:26	8:32
	8:42	8:45	8:46	8:47	8:49	8:55
	9:05	9:08	9:09	9:10	9:12	9:18
	9:28	9:31	9:32	9:33	9:35	9:41
	9:51	9:54	9:55	9:56	9:58	10:04
	10:14	10:17	10:18	10:19	10:21	10:27
	10:37	10:40	10:41	10:42	10:44	10:50
	11:00	11:03	11:04	11:05	11:07	11:13
	11:23	11:26	11:27	11:28	11:30	11:36
	11:46	11:49	11:50	11:51	11:53	11:59
PM	**12:09**	**12:12**	**12:13**	**12:14**	**12:16**	**12:22**
	12:32	**12:35**	**12:36**	**12:37**	**12:39**	**12:45**
	12:55	**12:58**	**12:59**	**1:00**	**1:02**	**1:08**
	1:18	**1:21**	**1:22**	**1:23**	**1:25**	**1:31**
	1:41	**1:44**	**1:45**	**1:46**	**1:48**	**1:54**
	2:04	**2:07**	**2:08**	**2:09**	**2:11**	**2:17**
	2:27	**2:30**	**2:31**	**2:32**	**2:34**	**2:40**
	2:50	**2:53**	**2:54**	**2:55**	**2:57**	**3:03**
	3:13	**3:16**	**3:17**	**3:18**	**3:20**	**3:26**
	3:36	**3:39**	**3:40**	**3:41**	**3:43**	**3:49**
	3:59	**4:02**	**4:03**	**4:04**	**4:06**	**4:12**
	4:22	**4:25**	**4:26**	**4:27**	**4:29**	**4:35**
	4:45	**4:48**	**4:49**	**4:50**	**4:52**	**4:58**
	5:08	**5:11**	**5:12**	**5:13**	**5:15**	**5:21**
	5:31	**5:34**	**5:35**	**5:36**	**5:38**	**5:44**
	5:54	**5:57**	**5:58**	**5:59**	**6:01**	**6:07**
	6:17	**6:20**	**6:21**	**6:22**	**6:24**	**6:30**
	6:40	**6:43**	**6:44**	**6:45**	**6:47**	**6:53**
	7:03	**7:06**	**7:07**	**7:08**	**7:10**	**7:16**
	7:26	**7:29**	**7:30**	**7:31**	**7:33**	**7:39**
	7:49	**7:52**	**7:53**	**7:54**	**7:56**	**8:02**
	8:12	**8:15**	**8:16**	**8:17**	**8:19**	**8:25**
	8:35	**8:38**	**8:39**	**8:40**	**8:42**	**8:48**
	8:58	**9:01**	**9:02**	**9:03**	**9:05**	**9:11**
	9:21	**9:24**	**9:25**	**9:26**	**9:28**	**9:34**
	9:44	**9:47**	**9:48**	**9:49**	**9:51**	**9:57**
	10:07	**10:10**	**10:11**	**10:12**	**10:14**	**10:20**
	10:30	**10:33**	**10:34**	**10:35**	**10:37**	**10:43**

Effective August 24, 2020:

- Will operate one (1) bus from 7 a.m. until 5 p.m. each scheduled weekday
- Frequency of 25 minutes
- This route and schedule have been approved by UNT leadership

Mean Green (MG)

Service	Pre-COVID-19	March 23 Changes	May 11 Changes	August 24 Changes
MG	**Frequency** – 10 minutes **Average Monthly Ridership** – 16,716 **Average Daily Ridership** – 982 Cost included in '19/'20 annual agreement	Suspended Service	**Frequency** – 23 minutes **Ridership (5/11 – 6/30)** – 5 {daily average} Cost included in '19/'20 annual agreement	**Frequency** – 25 minutes Cost included in '20/'21 annual agreement

North Texan (NT)

Pre-COVID (before March 23, 2020)



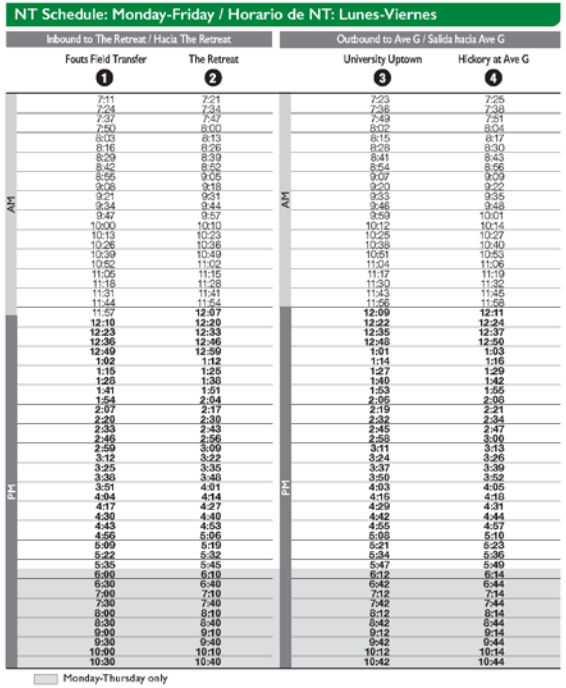

NT Schedule: Monday-Friday / Horario de NT: Lunes-Viernes

Inbound to The Retreat / Hacia The Retreat		Outbound to Ave G / Salida hacia Ave G	
Fouts Field Transfer ❶	The Retreat ❷	University Uptown ❸	Hickory at Ave G ❹
7:11	7:21	7:23	7:25
7:24	7:34	7:36	7:38
7:37	7:47	7:49	7:51
7:50	8:00	8:02	8:04
8:03	8:13	8:15	8:17
8:16	8:26	8:28	8:30
8:29	8:39	8:41	8:43
8:42	8:52	8:54	8:56
8:55	9:05	9:07	9:09
9:08	9:18	9:20	9:22
9:21	9:31	9:33	9:35
9:34	9:44	9:46	9:48
9:47	9:57	9:59	10:01
10:00	10:10	10:12	10:14
10:13	10:23	10:25	10:27
10:26	10:36	10:38	10:40
10:39	10:49	10:51	10:53
10:52	11:02	11:04	11:06
11:05	11:15	11:17	11:19
11:18	11:28	11:30	11:32
11:31	11:41	11:43	11:45
11:44	11:54	11:56	11:58
11:57	12:07	12:09	12:11
12:10	12:20	12:22	12:24
12:23	12:33	12:35	12:37
12:36	12:46	12:48	12:50
12:49	12:59	1:01	1:03
1:02	1:12	1:14	1:16
1:15	1:25	1:27	1:29
1:28	1:38	1:40	1:42
1:41	1:51	1:53	1:55
1:54	2:04	2:06	2:08
2:07	2:17	2:19	2:21
2:20	2:30	2:32	2:34
2:33	2:43	2:45	2:47
2:46	2:56	2:58	3:00
2:59	3:09	3:11	3:13
3:12	3:22	3:24	3:26
3:25	3:35	3:37	3:39
3:38	3:48	3:50	3:52
3:51	4:01	4:03	4:05
4:04	4:14	4:16	4:18
4:17	4:27	4:29	4:31
4:30	4:40	4:42	4:44
4:43	4:53	4:55	4:57
4:56	5:06	5:08	5:10
5:09	5:19	5:21	5:23
5:22	5:32	5:34	5:36
5:35	5:45	5:47	5:49
6:00	6:10	6:12	6:14
6:30	6:40	6:42	6:44
7:00	7:10	7:12	7:14
7:30	7:40	7:42	7:44
8:00	8:10	8:12	8:14
8:30	8:40	8:42	8:44
9:00	9:10	9:12	9:14
9:30	9:40	9:42	9:44
10:00	10:10	10:12	10:14
10:30	10:40	10:42	10:44

Monday-Thursday only

Post-COVID (before May 11, 2020)



NT124 Schedule: Monday-Friday

All times are departure times

	Fouts Field Transfer ❶	The Retreat ❷	University Uptown ❸	EB Hickory at Ave G ❹
AM	7:14	7:24	7:26	7:28
	7:39	7:49	7:51	7:53
	8:04	8:14	8:16	8:18
	8:29	8:39	8:41	8:43
	8:54	9:04	9:06	9:08
	9:19	9:29	9:31	9:33
	9:44	9:54	9:56	9:58
	10:09	10:19	10:21	10:23
	10:34	10:44	10:46	10:48
	10:59	11:09	11:11	11:13
	11:24	11:34	11:36	11:38
	11:49	11:59	**12:01**	**12:03**
PM	**12:14**	**12:24**	**12:26**	**12:28**
	12:39	**12:49**	**12:51**	**12:53**
	1:04	**1:14**	**1:16**	**1:18**
	1:29	**1:39**	**1:41**	**1:43**
	1:54	**2:04**	**2:06**	**2:08**
	2:19	**2:29**	**2:31**	**2:33**
	2:44	**2:54**	**2:56**	**2:58**
	3:09	**3:19**	**3:21**	**3:23**
	3:34	**3:44**	**3:46**	**3:48**
	3:59	**4:09**	**4:11**	**4:13**
	4:24	**4:34**	**4:36**	**4:38**
	4:49	**4:59**	**5:01**	**5:03**
	5:14	**5:24**	**5:26**	**5:28**
	5:39	**5:49**	**5:51**	**5:53**
	6:04	**6:14**	**6:16**	**6:18**

Effective August 24, 2020:

- Will operate one (1) bus from 7 a.m. until 5 p.m. each scheduled weekday
- This route will also include one (1) morning peak vehicles that will provide additional service from 7 a.m. until 11 a.m., Monday through Friday on scheduled days
- Frequency
  - 11 minutes from 7 a.m. until 11 a.m.
  - 21 minutes from 11 a.m. until 5 p.m.
- This route and schedule have been approved by UNT leadership

North Texan (NT)

Service	Pre-COVID-19	March 23 Changes	May 11 Changes	August 24 Changes
NT	**Frequency** – 13 minutes **Average Monthly Ridership** – 12, 309 **Average Daily Ridership** – 724 Cost included in '19/'20 annual agreement	**Frequency** – 25 minutes **Ridership (3/23 – 5/10)** – 7 {daily average} Cost included in '19/'20 annual agreement	**Frequency** – 25 minutes **Ridership (5/11 – 6/30)** – 3 {daily average} Cost included in '19/'20 annual agreement	**Frequency** – 11 minutes Cost included in '20/'21 annual agreement

Eagle Point (EP)

Pre-COVID (before March 23, 2020)



EP Schedule: Monday-Friday / Horario de EP: Lunes-Viernes

	Inbound to The Union / Hacia The Union					Outbound to Victory Hall / Salida hacia Victory Hall	
	Victory Hall (Departs) ❶	Fouts Field Transfer ❷	Pohl Recreation Center ❸	GAB ❹	Oak at Normal ❺	Union Transfer (Departs) ❻	Kerr Hall / BLB ❼
AM	7:18	7:23	7:25	7:28	7:29	7:43	7:46
	7:38	7:43	7:45	7:48	7:49	8:03	8:06
	7:58	8:03	8:05	8:08	8:09	8:23	8:26
	8:18	8:23	8:25	8:28	8:29	8:43	8:46
	8:38	8:43	8:45	8:48	8:49	9:03	9:06
	8:58	9:03	9:05	9:08	9:09	9:23	9:26
	9:18	9:23	9:25	9:28	9:29	9:43	9:46
	9:38	9:43	9:45	9:48	9:49	10:03	10:06
	9:58	10:03	10:05	10:08	10:09	10:23	10:26
	10:18	10:23	10:25	10:28	10:29	10:43	10:46
	10:38	10:43	10:45	10:48	10:49	11:03	11:06
	10:58	11:03	11:05	11:08	11:09	11:23	11:26
	11:18	11:23	11:25	11:28	11:29	11:43	11:46
	11:38	11:43	11:45	11:48	11:49	**12:03**	**12:06**
	11:58	**12:03**	**12:05**	**12:08**	**12:09**	**12:23**	**12:26**
PM	**12:18**	**12:23**	**12:25**	**12:28**	**12:29**	**12:43**	**12:46**
	12:38	**12:43**	**12:45**	**12:48**	**12:49**	**1:03**	**1:06**
	12:58	**1:03**	**1:05**	**1:08**	**1:09**	**1:23**	**1:26**
	1:18	**1:23**	**1:25**	**1:28**	**1:29**	**1:43**	**1:46**
	1:38	**1:43**	**1:45**	**1:48**	**1:49**	**2:03**	**2:06**
	1:58	**2:03**	**2:05**	**2:08**	**2:09**	**2:23**	**2:26**
	2:18	**2:23**	**2:25**	**2:28**	**2:29**	**2:43**	**2:46**
	2:38	**2:43**	**2:45**	**2:48**	**2:49**	**3:03**	**3:06**
	2:58	**3:03**	**3:05**	**3:08**	**3:09**	**3:23**	**3:26**
	3:18	**3:23**	**3:25**	**3:28**	**3:29**	**3:43**	**3:46**
	3:38	**3:43**	**3:45**	**3:48**	**3:49**	**4:03**	**4:06**
	3:58	**4:03**	**4:05**	**4:08**	**4:09**	**4:23**	**4:26**
	4:18	**4:23**	**4:25**	**4:28**	**4:29**	**4:43**	**4:46**
	4:38	**4:43**	**4:45**	**4:48**	**4:49**	**5:03**	**5:06**
	4:58	**5:03**	**5:05**	**5:08**	**5:09**	**5:23**	**5:26**

No schedule available post-COVID because we are running on a summer schedule.

Eagle Point (EP)

Service	Pre-COVID-19	March 23 Changes	May 11 Changes	August 24 Changes
EP	**Frequency** – 20 minutes **Average** Monthly Ridership –18,640 **Average Daily Ridership** – 1,094 Cost included in '19/'20 annual agreement	**Frequency** – 40 minutes **Ridership (3/23 – 5/10) – Daily Average** – 25 Cost included in '19/'20 annual agreement	Suspended Service	**Frequency** – 35 minutes Cost included in '20/'21 annual agreement

Colorado Express (CE)

Pre-COVID (before March 23, 2020)



CE Schedule: Monday-Friday / Horario de CE: Lunes-Viernes

	Inbound to The Union / Hacia The Union					Outbound to The Ridge / Salida hacia The Ridge		
	The Ridge (Departs) ❶	MedPark Station ❷	The Venue (Bernard St) ❸	The Arbors ❹	University Place ❺	Union Transfer (Departs) ❻	Colorado Blvd at Golden Triangle Mall ❼	Pace's Crossing ❽
AM	7:07	7:10	7:32	7:33	7:34	7:40	7:54	7:56
	7:22	7:25	7:47	7:48	7:49	8:00	8:14	8:16
	7:57	8:00	8:22	8:23	8:24	8:35	8:49	8:51
	8:18	8:21	8:43	8:44	8:45	9:00	9:14	9:16
	8:52	8:55	9:17	9:18	9:19	9:28	9:42	9:44
	9:17	9:20	9:42	9:43	9:44	9:55	10:09	10:11
	9:45	9:48	10:10	10:11	10:12	10:18	10:32	10:34
	10:12	10:15	10:37	10:38	10:39	10:44	10:58	11:00
	10:35	10:38	11:00	11:01	11:02	11:08	11:22	11:24
	11:01	11:04	11:26	11:27	11:28	11:35	11:49	11:51
	11:25	11:28	11:50	11:51	11:52	12:00	12:14	12:16
	11:52	11:55	12:17	12:18	12:19	12:27	12:41	12:43
PM	12:17	12:20	12:42	12:43	12:44	12:50	1:04	1:06
	12:44	12:47	1:09	1:10	1:11	1:17	1:31	1:33
	1:07	1:10	1:32	1:33	1:34	1:42	1:56	1:58
	1:34	1:37	1:59	2:00	2:01	2:07	2:21	2:23
	1:59	2:02	2:24	2:25	2:26	2:32	2:46	2:48
	2:24	2:27	2:49	2:50	2:51	2:56	3:10	3:12
	2:49	2:52	3:14	3:15	3:16	3:20	3:34	3:36
	3:13	3:16	3:38	3:39	3:40	3:47	4:01	4:03
	3:37	3:40	4:02	4:03	4:04	4:10	4:24	4:26
	4:04	4:07	4:29	4:30	4:31	4:38	4:52	4:54
	4:27	4:30	4:52	4:53	4:54	5:00	5:14	5:16
	4:55	4:58	5:20	5:21	5:22	5:28	5:42	5:44
	5:17	5:20	5:42	5:43	5:44	5:52	6:06	6:08
	6:00	6:05	6:26	6:27	6:27	6:35	6:51	6:53
	6:55	7:00	7:21	7:22	7:22	7:30	7:46	7:48
	7:50	7:55	8:16	8:17	8:17	8:25	8:41	8:43
	8:45	8:50	9:11	9:12	9:12	9:20	9:36	9:38
	9:40	9:45	10:06	10:07	10:07	10:15	10:31	10:33

Monday-Thursday only

Post-COVID (before May 11, 2020)



CE174 Schedule: Monday-Friday

	Outbound to MedPark/Salida hacia MedPark				
	Union Transfer ❶	SB Colorado/ Golden ❷	Pace's Crossing ❸	The Ridge ❹	MedPark ❺
AM	6:57	7:11	7:13	7:13	7:20
	7:52	8:06	8:08	8:08	8:15
	8:47	9:01	9:03	9:03	9:20
	9:42	9:56	9:58	9:58	10:05
	10:37	10:51	10:53	10:53	11:00
	11:32	11:46	11:48	11:48	11:55
PM	12:27	12:41	12:43	12:43	12:50
	1:22	1:36	1:38	1:38	1:45
	2:17	2:31	2:33	2:33	2:40
	3:12	3:26	3:28	3:28	3:35
	4:07	4:21	4:23	4:23	4:30
	5:02	5:16	5:18	5:18	5:25
	5:57	6:11	6:13	6:13	6:20

	Inbound to Union Transfer/Hacia Union Transfer					
	NB I35-E Frontage Road at Point ❻	The Venue (Bernard St) ❼	The Arbors ❽	University Place ❾	NB Welch at Eagle ❿	NB Welch at Highland ⓫
AM	7:33	7:38	7:39	7:40	7:43	7:44
	8:28	8:33	8:34	8:35	8:38	8:39
	9:23	9:28	9:29	9:30	9:33	9:34
	10:18	10:23	10:24	10:25	10:28	10:29
	11:13	11:18	11:19	11:20	11:23	11:24
PM	12:08	12:13	12:14	12:15	12:18	12:19
	1:03	1:08	1:09	1:10	1:13	1:14
	1:58	2:03	2:04	2:05	2:08	2:09
	2:53	2:58	2:59	3:00	3:03	3:04
	3:48	3:53	3:54	3:55	3:58	3:59
	4:43	4:48	4:49	4:50	4:53	4:54
	5:38	5:43	5:44	5:45	5:48	5:49
	6:33	6:38	6:39	6:40	6:43	6:44

Effective August 24, 2020:

- Will operate one (1) bus from 7 a.m. until 5 p.m. each scheduled weekday
- This route will also include one (1) morning peak vehicle that will provide additional service from 7 a.m. until 11 a.m., Monday through Thursday on scheduled days
- This route and schedule have been approved by UNT leadership

Colorado Express (CE)

Service	Pre-COVID-19	March 23 Changes	May 11 Changes	August 24 Changes
CE	**Frequency** – 25 minutes **Average Monthly Ridership** – 11,524 **Average Daily Ridership** – 677 Cost included in '19/'20 annual agreement	**Frequency** – 55 minutes **Ridership (3/23 – 5/10)** – 11 {daily average} Cost included in '19/'20 annual agreement	**Frequency** – 55 minutes **Ridership (5/11 – 6/30)** – 16 {daily average} Cost included in '19/'20 annual agreement	**Frequency** – 22 minutes Cost included in '20/'21 annual agreement

Centre Place (CP)

Pre-COVID (before March 23, 2020)



CP AM Schedule: Monday-Friday / Horario de CP AM: Lunes-Viernes

Inbound to The Union / Hacia The Union			Outbound to The Forum / Salida hacia The Forum		
The Forum/Republic (Departs) ❶	Castle Rock ❷	The Arch ❸	Union Transfer (Departs) ❹	I-35-E at Frontage Rd ❺	I4 Fifty One ❻
7:30	7:32	7:34	7:45	7:56	7:57
7:35	7:37	7:39	7:50	8:01	8:02
7:40	7:42	7:44	7:55	8:06	8:07
7:45	7:47	7:49	8:00	8:11	8:12
8:00	8:02	8:04	8:15	8:26	8:27
8:05	8:07	8:09	8:20	8:31	8:32
8:10	8:12	8:14	8:25	8:36	8:37
8:15	8:17	8:19	8:30	8:41	8:42
8:30	8:32	8:34	8:45	8:56	8:57
8:35	8:37	8:39	8:50	9:01	9:02
8:40	8:42	8:44	8:55	9:06	9:07
8:45	8:47	8:49	9:00	9:11	9:12
9:00	9:02	9:04	9:15	9:26	9:27
9:05	9:07	9:09	9:20	9:31	9:32
9:10	9:12	9:14	9:25	9:36	9:37
9:15	9:17	9:19	9:30	9:41	9:42
9:30	9:32	9:34	9:45	9:56	9:57
9:35	9:37	9:39	9:50	10:01	10:02
9:40	9:42	9:44	9:55	10:06	10:07
9:45	9:47	9:49	10:00	10:11	10:12
10:00	10:02	10:04	10:15	10:26	10:27
10:05	10:07	10:09	10:20	10:31	10:32
10:10	10:12	10:14	10:25	10:36	10:37
10:15	10:17	10:19	10:30	10:41	10:42
10:30	10:32	10:34	10:45	10:56	10:57
10:35	10:37	10:39	10:50	11:01	11:02
10:40	10:42	10:44	10:55	11:06	11:07
10:45	10:47	10:49	11:00	11:11	11:12
11:00	11:02	11:04	11:15	11:26	11:27
11:05	11:07	11:09	11:20	11:31	11:32
11:10	11:12	11:14	11:25	11:36	11:37
11:15	11:17	11:19	11:30	11:41	11:42
11:30	11:32	11:34	11:45	11:56	11:57
11:35	11:37	11:39	11:50	--	--
11:40	11:42	11:44	11:55	--	--
11:45	11:47	11:49	--	--	--



CP PM Schedule: Monday-Friday / Horario de CP PM: Lunes-Viernes

Inbound to The Union / Hacia The Union			Outbound to The Forum / Salida hacia The Forum		
The Forum/Republic (Departs) ❶	Castle Rock ❷	The Arch ❸	Union Transfer (Departs) ❹	I-35-E at Frontage Rd ❺	I4 Fifty One ❻
--	--	--	--	12:01	12:02
--	--	--	--	12:06	12:07
12:00	12:02	12:04	12:11	12:26	12:27
12:05	12:07	12:09	12:26	12:31	12:32
12:10	12:12	12:14	12:25	12:36	12:37
12:15	12:17	12:19	12:30	12:41	12:42
12:30	12:32	12:34	12:45	12:56	12:57
12:35	12:37	12:39	12:50	1:01	1:02
12:40	12:42	12:44	12:55	1:06	1:07
12:45	12:47	12:49	1:00	1:11	1:12
1:00	1:02	1:04	1:15	1:26	1:27
1:05	1:07	1:09	1:20	1:31	1:32
1:10	1:12	1:14	1:25	1:36	1:37
1:15	1:17	1:19	1:30	1:41	1:42
1:30	1:32	1:34	1:45	1:56	1:57
1:35	1:37	1:39	1:50	2:01	2:02
1:40	1:42	1:44	1:55	2:06	2:07
1:45	1:47	1:49	2:00	2:11	2:12
2:00	2:02	2:04	2:15	2:26	2:27
2:05	2:07	2:09	2:20	2:31	2:32
2:10	2:12	2:14	2:25	2:36	2:37
2:15	2:17	2:19	2:30	2:41	2:42
2:30	2:32	2:34	2:45	2:56	2:57
2:35	2:37	2:39	2:50	3:01	3:02
2:40	2:42	2:44	2:55	3:06	3:07
2:45	2:47	2:49	3:00	3:11	3:12
3:00	3:02	3:04	3:15	3:26	3:27
3:05	3:07	3:09	3:20	3:31	3:32
3:10	3:12	3:14	3:25	3:36	3:37
3:15	3:17	3:19	3:30	3:41	3:42
3:30	3:32	3:34	3:45	3:56	3:57
3:35	3:37	3:39	3:50	4:01	4:02
3:40	3:42	3:44	3:55	4:06	4:07
3:45	3:47	3:49	4:00	4:11	4:12
4:00	4:02	4:04	4:15	4:26	4:27
4:05	4:07	4:09	4:20	4:31	4:32
4:10	4:12	4:14	4:25	4:36	4:37
4:15	4:17	4:19	4:30	4:41	4:42
4:30	4:32	4:34	4:45	4:56	4:57
4:35	4:37	4:39	4:50	5:01	5:02
4:40	4:42	4:44	4:55	5:06	5:07
4:45	4:47	4:49	5:00	5:11	5:12
5:00	5:02	5:04	5:15	5:26	5:27
5:05	5:07	5:09	5:20	5:31	5:32
5:10	5:12	5:14	5:25	5:36	5:37
5:15	5:17	5:19	5:30	5:41	5:42
5:45	5:47	5:49	5:51	6:02	6:03
6:05	6:07	6:09	6:31	6:42	6:43
6:20	6:22	6:24	6:51	7:02	7:03
6:40	6:42	6:44	7:11	7:22	7:23
7:00	7:02	7:04	7:31	7:42	7:43
7:25	7:27	7:29	7:51	8:02	8:03
7:45	7:47	7:49	8:11	8:22	8:23
8:05	8:07	8:09	8:31	8:42	8:43
8:25	8:27	8:29	8:51	9:02	9:03
8:45	8:47	8:49	9:11	9:22	9:23
9:05	9:07	9:09	9:31	9:42	9:43
9:25	9:27	9:29	9:51	10:02	10:03
9:45	9:47	9:49	10:11	10:22	10:23
10:05	10:07	10:09	10:31	10:42	10:43

Monday-Thursday only

Post-COVID (before May 11, 2020)



CP154 Schedule: Monday-Friday

	Inbound to Union Transfer/Hacia Union Transfer			Outbound to The Forum/Salida hacia The Forum		
	The Forum/ Republic ❶	Castle Rock ❷	The Arch ❸	Union Transfer ❹	NB I35-E Frontage Road at Point ❺	I4 Fifty One ❻
AM	7:15	7:17	7:19	7:30	7:40	7:41
	7:44	7:46	7:48	7:59	8:09	8:10
	8:13	8:15	8:17	8:28	8:38	8:39
	8:42	8:44	8:46	8:57	9:07	9:08
	9:11	9:13	9:15	9:26	9:36	9:37
	9:40	9:42	9:44	9:55	10:05	10:06
	10:09	10:11	10:13	10:24	10:34	10:35
	10:38	10:40	10:42	10:53	11:03	11:04
	11:07	11:09	11:11	11:22	11:32	11:33
	11:36	11:38	11:40	11:51	12:01	12:02
PM	12:05	12:07	12:09	12:20	12:30	12:31
	12:34	12:36	12:38	12:49	12:59	1:00
	1:03	1:05	1:07	1:18	1:28	1:29
	1:32	1:34	1:36	1:47	1:57	1:58
	2:01	2:03	2:05	2:16	2:26	2:27
	2:30	2:32	2:34	2:45	2:55	2:56
	2:59	3:01	3:03	3:14	3:24	3:25
	3:28	3:30	3:32	3:43	3:53	3:54
	3:57	3:59	4:01	4:12	4:22	4:23
	4:26	4:28	4:30	4:41	4:51	4:52
	4:55	4:57	4:59	5:10	5:20	5:21
	5:24	5:26	5:28	5:39	5:49	5:50
	5:53	5:55	5:57	6:08	6:18	6:19
	6:22	6:24	6:26	6:37	6:47	6:48

- Extended evening service that will operate one (1) bus until 9 p.m., Monday through Thursday on scheduled days

- 8 minutes from 7 a.m. until 5 p.m.
- 40 minutes from 5 p.m. until 9 p.m.

Centre Place (CP)

Service	Pre-COVID-19	March 23 Changes	May 11 Changes	August 24 Changes
CP	**Frequency** – 7 minutes **Average Monthly Ridership** – 30,140 **Average Daily Ridership** – 1,655 Cost included in '19/'20 annual agreement	**Frequency** – 30 minutes **Ridership (3/23 – 5/10)** – 11 {daily average} Cost included in '19/'20 annual agreement	**Frequency** – 30 minutes **Ridership (5/11 – 6/30)** – 14 {daily average} Cost included in '19/'20 annual agreement	**Frequency** – 8 minutes Cost included in '20/'21 annual agreement

Discovery Park (DP)

Pre-COVID (before March 23, 2020)



DP Schedule: Monday-Friday / Horario de DP: Lunes-Viernes

Outbound to Discovery Park / Salida hacia Discovery Park			Inbound to The Union / Hacia The Union						
Union Transfer (Departs)	Elm at Fallmeadow	Discovery Park	Oak at Denton	Oak at Thomas	N Texas at Stella	West Hall	College Inn/ EESAT	GAB	Union Transfer
1	2	3	4	5	6	7	8	9	1
6:00	6:13	6:16	6:31	6:35	6:36	6:37	6:38	6:39	6:42
6:30	6:43	6:46	7:01	7:05	7:06	7:07	7:08	7:09	7:12
7:00	7:13	7:16	7:31	7:35	7:36	7:37	7:38	7:39	7:42
7:30	7:43	7:46	8:01	8:05	8:06	8:07	8:08	8:09	8:12
7:55	8:07	8:23	8:33	8:36	8:38	8:38	8:39	8:40	8:43
8:00	8:12	8:26	8:36	8:39	8:41	8:41	8:42	8:43	8:46
8:05	8:17	8:29	8:39	8:42	8:44	8:44	8:45	8:46	8:49
8:30	8:42	8:56	9:06	9:09	9:11	9:11	9:12	9:13	9:16
8:55	9:07	9:23	9:33	9:36	9:38	9:38	9:39	9:40	9:43
9:00	9:12	9:26	9:36	9:39	9:41	9:41	9:42	9:43	9:46
9:05	9:17	9:29	9:39	9:42	9:44	9:44	9:45	9:46	9:49
9:30	9:42	9:56	10:06	10:09	10:11	10:11	10:12	10:13	10:16
9:55	10:07	10:23	10:33	10:36	10:38	10:38	10:39	10:40	10:43
10:00	10:12	10:26	10:36	10:39	10:41	10:41	10:42	10:43	10:46
10:05	10:17	10:29	10:39	10:42	10:44	10:44	10:45	10:46	10:49
10:30	10:42	10:56	11:06	11:09	11:11	11:11	11:12	11:13	11:16
10:55	11:07	11:23	11:33	11:36	11:38	11:38	11:39	11:40	11:43
11:00	11:12	11:26	11:36	11:39	11:41	11:41	11:42	11:43	11:46
11:05	11:17	11:29	11:39	11:42	11:44	11:44	11:45	11:46	11:49
11:30	11:42	11:56	12:06	12:09	12:11	12:11	12:12	12:13	12:16
11:55	12:07	12:23	12:33	12:36	12:38	12:38	12:39	12:40	12:43
12:00	12:12	12:26	12:36	12:39	12:41	12:41	12:42	12:43	12:46
12:05	12:17	12:29	12:39	12:42	12:44	12:44	12:45	12:46	12:49
12:30	12:42	12:56	1:06	1:09	1:11	1:11	1:12	1:13	1:16
12:55	1:07	1:23	1:33	1:36	1:38	1:38	1:39	1:40	1:43
1:00	1:12	1:26	1:36	1:39	1:41	1:41	1:42	1:43	1:46
1:05	1:17	1:29	1:39	1:42	1:44	1:44	1:45	1:46	1:49
1:30	1:42	1:56	2:06	2:09	2:11	2:11	2:12	2:13	2:16
1:55	2:07	2:23	2:33	2:36	2:38	2:38	2:39	2:40	2:43
2:00	2:12	2:26	2:36	2:39	2:41	2:41	2:42	2:43	2:46
2:05	2:17	2:29	2:39	2:42	2:44	2:44	2:45	2:46	2:49
2:30	2:42	2:56	3:06	3:09	3:11	3:11	3:12	3:13	3:16
2:55	3:07	3:23	3:33	3:36	3:38	3:38	3:39	3:40	3:43
3:00	3:12	3:26	3:36	3:39	3:41	3:41	3:42	3:43	3:46
3:05	3:17	3:29	3:39	3:42	3:44	3:44	3:45	3:46	3:49
3:30	3:42	3:56	4:06	4:09	4:11	4:11	4:12	4:13	4:16
3:55	4:07	4:23	4:33	4:36	4:38	4:38	4:39	4:40	4:43
4:00	4:12	4:26	4:36	4:39	4:41	4:41	4:42	4:43	4:46
4:05	4:17	4:29	4:39	4:42	4:44	4:44	4:45	4:46	4:49
4:30	4:42	4:56	5:06	5:09	5:11	5:11	5:12	5:13	5:16
4:55	5:07	5:23	5:33	5:36	5:38	5:38	5:39	5:40	5:43
5:00	5:12	5:26	5:36	5:39	5:41	5:41	5:42	5:43	5:46
5:05	5:17	5:29	5:39	5:42	5:44	5:44	5:45	5:46	5:49
5:33	5:45	5:57	6:07	6:10	6:12	6:12	6:13	6:14	6:17
6:23	6:35	6:47	6:57	7:00	7:02	7:02	7:03	7:04	7:07
7:13	7:25	7:37	7:47	7:50	7:52	7:52	7:53	7:54	7:57
8:06	8:18	8:30	8:40	8:43	8:45	8:45	8:46	8:47	8:50
8:56	9:08	9:20	9:30	9:33	9:35	9:35	9:36	9:37	9:40
9:46	9:58	10:10	10:20	10:23	10:25	10:25	10:26	10:27	10:30
10:36	10:48	11:00	11:10	11:13	11:15	11:15	11:16	11:17	11:20

Post-COVID (before May 11, 2020)



DP144 Schedule: Monday-Friday

Outbound to Discovery Park/Salida hacia Discovery Park			
	Union Transfer	WB Oak at Thomas	NB Bonnie Brae at University
	1	2	3
AM	7:19	7:23	7:26
	7:59	8:03	8:06
	8:39	8:43	8:46
	9:19	9:23	9:26
	9:59	10:03	10:06
	10:39	10:43	10:46
	11:19	11:23	11:26
	11:59	12:03	12:06
PM	12:39	12:43	12:46
	1:19	1:23	1:26
	1:59	2:03	2:06
	2:39	2:43	2:46
	3:19	3:23	3:26
	3:59	4:03	4:06
	4:39	4:43	4:46
	5:19	5:23	5:26
	5:59	6:03	6:06
	6:39	6:43	6:46
	7:19	7:23	7:26

Inbound to Union Transfer/Hacia Union Transfer					
	Discovery Park	SB Bonnie Brae St at University Dr	EB Hickory at Ave H	Pohl Recreation Center	GAB
	4	3	5	6	7
AM	7:35	7:42	7:45	7:47	7:48
	8:15	8:22	8:25	8:27	8:28
	8:55	9:02	9:05	9:07	9:08
	9:35	9:42	9:45	9:47	9:48
	10:15	10:22	10:25	10:27	10:28
	10:55	11:02	11:05	11:07	11:08
	11:35	11:42	11:45	11:47	11:48
PM	12:15	12:22	12:25	12:27	12:28
	12:55	1:02	1:05	1:07	1:08
	1:35	1:42	1:45	1:47	1:48
	2:15	2:22	2:25	2:27	2:28
	2:55	3:02	3:05	3:07	3:08
	3:35	3:42	3:45	3:47	3:48
	4:15	4:22	4:25	4:27	4:28
	4:55	5:02	5:05	5:07	5:08
	5:35	5:42	5:45	5:47	5:48
	6:15	6:22	6:25	6:27	6:28
	6:55	7:02	7:05	7:07	7:08

Effective August 24, 2020:

- Will operate three (3) buses from 7 a.m. until 5 p.m. each scheduled weekday
- This route will also include
  - {NEW} One (1) mid-day peak vehicle that will provide additional service from 9 a.m. until 3 p.m., Monday through Friday on scheduled days
  - Extended evening service that will operate one (1) bus until 9 p.m. Monday through Friday on scheduled days
- Frequency
  - 13 minutes from 7 a.m. until 9 a.m.
  - 10 minutes from 9 a.m. until 3 p.m.
  - 13 minutes from 3 p.m. until 5 p.m.
- This route and schedule have been approved by UNT leadership

Discovery Park (DP)

Service	Pre-COVID-19	March 23 Changes	May 11 Changes	August 24 Changes
DP	**Frequency** – 15 minutes **Average Monthly Ridership** – 27,441 **Average Daily Ridership** – 1,612 Cost included in '19/'20 annual agreement	**Frequency** – 60 minutes **Ridership (3/23 – 5/10)** – 8 {daily average} Cost included in '19/'20 annual agreement	**Frequency** – 40 minutes **Ridership (5/11 – 6/30)** – 39 {daily average} Cost included in '19/'20 annual agreement	**Frequency** – 10 minutes Cost included in '20/'21 annual agreement

Bernard Street (BST)

Pre-COVID (before March 23, 2020)



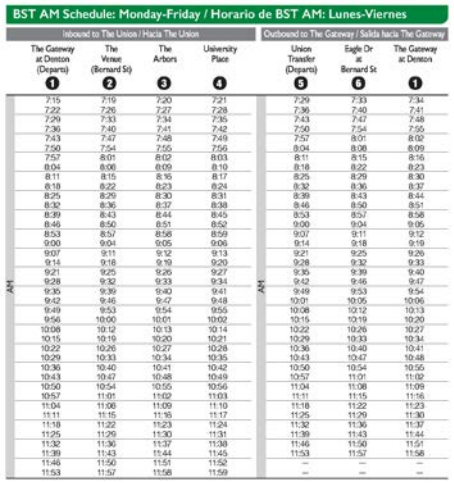



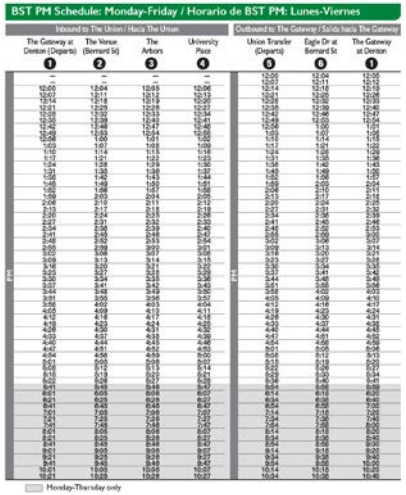

Post-COVID (before May 11, 2020)



BST164 Schedule: Monday-Friday

	Inbound to Union Transfer/Hacia Union Transfer				Outbound to the Gateway/Salida hacia Gateway	
	The Gateway at Denton ❶	The Venue (Bernard St) ❷	The Arbors ❸	University Place ❹	Union Transfer ❺	EB Eagle at Bernard ❻
AM	7:14	7:16	7:17	7:17	7:26	7:29
	7:34	7:36	7:37	7:37	7:46	7:49
	7:54	7:56	7:57	7:57	8:06	8:09
	8:14	8:16	8:17	8:17	8:26	8:29
	8:34	8:36	8:37	8:37	8:46	8:49
	8:54	8:56	8:57	8:57	9:06	9:09
	9:14	9:16	9:17	9:17	9:26	9:29
	9:34	9:36	9:37	9:37	9:46	9:49
	9:54	9:56	9:57	9:57	10:06	10:09
	10:14	10:16	10:17	10:17	10:26	10:29
	10:34	10:36	10:37	10:37	10:46	10:49
	10:54	10:56	10:57	10:57	11:06	11:09
	11:14	11:16	11:17	11:17	11:26	11:29
	11:34	11:36	11:37	11:37	11:46	11:49
	11:54	11:56	11:57	11:57	12:06	12:09
	12:14	12:16	12:17	12:17	12:26	12:29
	12:34	12:36	12:37	12:37	12:46	12:49
	12:54	12:56	12:57	12:57	1:06	1:09
PM	1:14	1:16	1:17	1:17	1:26	1:29
	1:34	1:36	1:37	1:37	1:46	1:49
	1:54	1:56	1:57	1:57	2:06	2:09
	2:14	2:16	2:17	2:17	2:26	2:29
	2:34	2:36	2:37	2:37	2:46	2:49
	2:54	2:56	2:57	2:57	3:06	3:09
	3:14	3:16	3:17	3:17	3:26	3:29
	3:34	3:36	3:37	3:37	3:46	3:49
	3:54	3:56	3:57	3:57	4:06	4:09
	4:14	4:16	4:17	4:17	4:26	4:29
	4:34	4:36	4:37	4:37	4:46	4:49
	4:54	4:56	4:57	4:57	5:06	5:09
	5:14	5:16	5:17	5:17	5:26	5:29
	5:34	5:36	5:37	5:37	5:46	5:49
	5:54	5:56	5:57	5:57	6:06	6:09
	6:14	6:16	6:17	6:17		

Effective August 24, 2020:

- Will operate two (2) buses from 7 a.m. until 5 p.m. each scheduled weekday
- Frequency of 10 minutes
- This route and schedule have been approved by UNT leadership

Bernard Street (BST)

Service	Pre-COVID-19	March 23 Changes	May 11 Changes	August 24 Changes
BST	**Frequency** – 7 minutes **Average Monthly Ridership** – 38,008 **Average Daily Ridership** – 2,233 Cost included in '19/'20 annual agreement	**Frequency** – 20 minutes **Ridership (3/23 – 5/10)** – 11 {daily average} Cost included in '19/'20 annual agreement	**Frequency** – 20 minutes **Ridership (5/11 – 6/30) –** 12 {daily average} Cost included in '19/'20 annual agreement	**Frequency** – 10 minutes Cost included in '20/'21 annual agreement

Mean Green Night Rider (MGNR)

Pre-COVID (before March 23, 2020)



MGNR Schedule: Monday-Friday / Horario de MGNR: Lunes-Viernes

	Inbound to The Union / Hacia The Union			Outbound to Victory Hall / Salida hacia Victory Hall	
	Victory Hall ❶	Fouts Field Transfer ❷	Pohl Recreation Center ❸	Union Transfer ❹	Kerr Hall / BLB ❺
PM	5:40	5:44	5:45	5:57	5:59
	5:54	5:58	5:59	6:11	6:13
	6:08	6:12	6:13	6:25	6:27
	6:22	6:26	6:27	6:39	6:41
	6:36	6:40	6:41	6:53	6:55
	6:50	6:54	6:55	7:07	7:09
	7:04	7:08	7:09	7:21	7:23
	7:18	7:22	7:23	7:35	7:37
	7:32	7:36	7:37	7:49	7:51
	7:46	7:50	7:51	8:03	8:05
	8:00	8:04	8:05	8:17	8:19
	8:14	8:18	8:19	8:31	8:33
	8:28	8:32	8:33	8:45	8:47
	8:42	8:46	8:47	8:59	9:01
	8:56	9:00	9:01	9:13	9:15
	9:10	9:14	9:15	9:27	9:29
	9:24	9:28	9:29	9:41	9:43
	9:38	9:42	9:43	9:55	9:57
	9:52	9:56	9:57	10:09	10:11
	10:06	10:10	10:11	10:23	10:25
	10:35	10:39	10:40	10:52	10:54
	11:05	11:09	11:10	11:22	11:24
	11:35	11:39	11:40	11:52	11:54
AM	12:05	12:09	12:10	12:22	12:24
	12:35	12:39	12:40	12:52	12:54
	1:05	1:09	1:10	1:22	1:24
	1:35	1:39	1:40	1:52	1:54

No schedule available Post-COVID because we are running on a summer schedule.

- Will operate from 8 a.m. until 1:30 a.m.
- From 8 a.m. until 5 p.m., MGP makes two trips on campus and then makes one trip out to Discovery Park for a total of five (5) trips to Discovery Park per day, with an hour and a half frequency to Discovery Park
- After 5 p.m., the bus remains on the campus circulator until the end of service for the day
- The route has a stop at Rayzor Ranch on both inboard and outbound routes

Mean Green Night Rider (MGNR)

Service	Pre-COVID-19	March 23 Changes	May 11 Changes	August 24 Changes
MGNR	**Frequency** – 14 minutes **Average Monthly Ridership** – 7,101 Cost included in '19/'20 annual agreement	**Frequency** –30 minutes **Ridership (3/23 – 5/10)** – 9 {daily average} Cost included in '19/'20 annual agreement	Suspended Service	**Frequency** – 30 minutes Cost included in '20/'21 annual agreement

Mean Green Night Rider Late-Night (MGNR-LN)

Pre-COVID (before March 23, 2020)



MGNR Schedule: Monday-Friday / Horario de MGNR: Lunes-Viernes

	Inbound to The Union / Hacia The Union			Outbound to Victory Hall / Salida hacia Victory Hall	
	Victory Hall ❶	Fouts Field Transfer ❷	Pohl Recreation Center ❸	Union Transfer ❹	Kerr Hall / BLB ❺
PM	5:40	5:44	5:45	5:57	5:59
	5:54	5:58	5:59	6:11	6:13
	6:08	6:12	6:13	6:25	6:27
	6:22	6:26	6:27	6:39	6:41
	6:36	6:40	6:41	6:53	6:55
	6:50	6:54	6:55	7:07	7:09
	7:04	7:08	7:09	7:21	7:23
	7:18	7:22	7:23	7:35	7:37
	7:32	7:36	7:37	7:49	7:51
	7:46	7:50	7:51	8:03	8:05
	8:00	8:04	8:05	8:17	8:19
	8:14	8:18	8:19	8:31	8:33
	8:28	8:32	8:33	8:45	8:47
	8:42	8:46	8:47	8:59	9:01
	8:56	9:00	9:01	9:13	9:15
	9:10	9:14	9:15	9:27	9:29
	9:24	9:28	9:29	9:41	9:43
	9:38	9:42	9:43	9:55	9:57
	9:52	9:56	9:57	10:09	10:11
	10:06	10:10	10:11	10:23	10:25
	10:35	10:39	10:40	10:52	10:54
	11:05	11:09	11:10	11:22	11:24
	11:35	11:39	11:40	11:52	11:54
AM	12:05	12:09	12:10	12:22	12:24
	12:35	12:39	12:40	12:52	12:54
	1:05	1:09	1:10	1:22	1:24
	1:35	1:39	1:40	1:52	1:54

No schedule available Post-COVID because we are running on a summer schedule.

Mean Green Night Rider Late-Night (MGNR-LN)

Service	Pre-COVID-19	March 23 Changes	May 11 Changes	August 24 Changes
MGNR-LN	**Frequency** – 30 minutes **Average Monthly Ridership** – 1,743 Cost included in '19/'20 annual agreement	**Frequency** – 30 minutes **Ridership (3/23 – 5/10)** – 1 {daily average} Cost included in '19/'20 annual agreement	Suspended Service	**Frequency** – 30 minutes Cost included in '20/'21 annual agreement

DENTON COUNTY TRANSPORTATION AUTHORITY

2020 June Online Open House Meeting & Title VI Analysis Report
Information Online June 15 – June 26, 2020

MEETING DETAILS

Meeting Overview

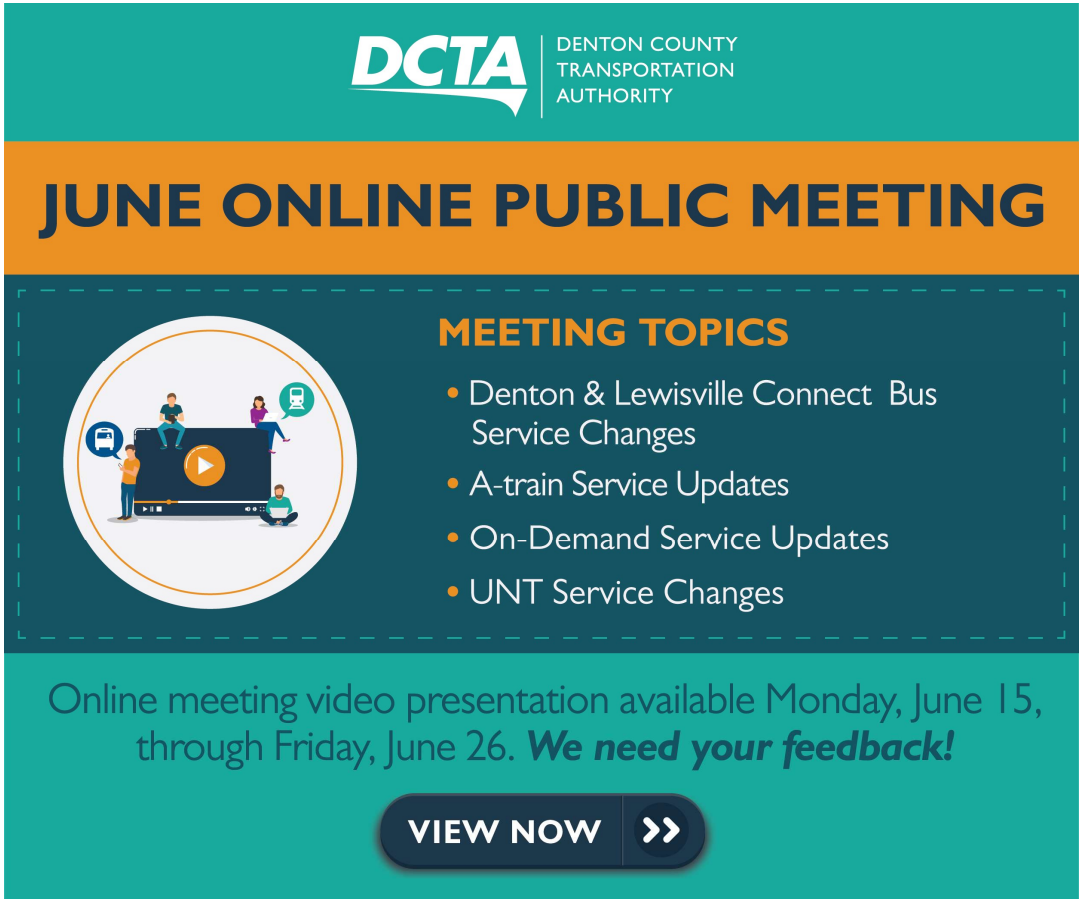

Engagement Area:

Lewisville

Highland Village

Denton

Engagement Timeframe:

June 15 – 26, 2020

Meeting Overview

- Due to COVID-19, DCTA hosted its June public meeting online
- A detailed presentation, a high-level video and a feedback form were posted at RideDCTA.net.
- Various feedback options were provided





Meeting Topics

Solicit Public Input on the Following Topics:

- Proposed Service Change Modification Overview
- Proposed Connect Bus Service Modifications
- Proposed A-train Service Modifications
- On-Demand Service Modifications
- University of North Texas Service Modifications
- City of Coppell Lyft Program Continuation
- Title VI Analysis



GETTING THE WORD OUT

- Community Outreach
- Social Media
- Email Marketing
- DCTA Website
- Media Relations
- Print Advertising

Community Outreach

Emails with a link to the open house materials were sent to the following partners who distributed the information to their respective audiences.

Emailed entities included:

City of Denton
City of Highland Village
City of Lewisville
Denia Community
Denton ISD
Discover Denton
DCTA Community Advisory Committee
DCTA Community Outreach News
DCTA Social Service Agency Roundtable
Highland Village Business Association
Haka Chin Community
Lewisville CVB
Lewisville ISD
All the offices of Lewisville local elected state officials(State House, State Senate)
Community Impact Newspaper (Lewisville, Flower Mound, Highland Village)
SEDNA Community
TWU
NCTC
NCTCOG
The Denton Record Chronicle

Social Media (Facebook) - Paid Advertising

Impressions:
57,220

Engagements:
786

Landing Page Results:
681



Social Media (Twitter) – Paid Advertising

Total Impressions:
51,825

Total Link Clicks:
712



Email Marketing

The "All Service Database" is comprised of every email address that is on file within the agency's GovDelivery email marketing system. This includes emails for passengers, stakeholders, partners, and focus groups.

- A total of 8 emails were distributed (total distribution – 37,056 contacts):
  - Rider Alerts (passengers) – 22,823
  - EnRoute News (passengers) –13,280
  - Inside Track (Stakeholders) – 544
  - Community Outreach News (social service agencies) – 409
- Total emails delivered – 34,237 (92% delivery rate)
- Total email opens – 5,977 (17.5% open rate)
- Total clicks –1,412 (4% open rate)

**14 percent open rate is government/public industry standard*
**2 percent click-through rate is government/public industry standard*



DCTA Website

Homepage Websplash:

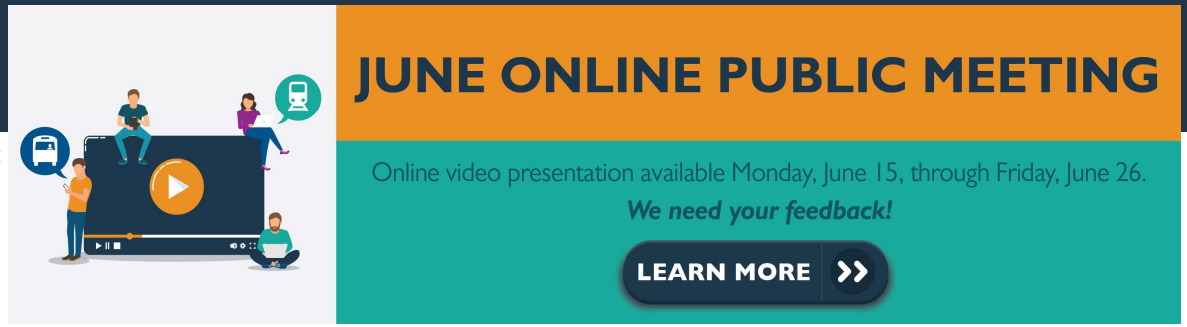

Dedicated Webpage:

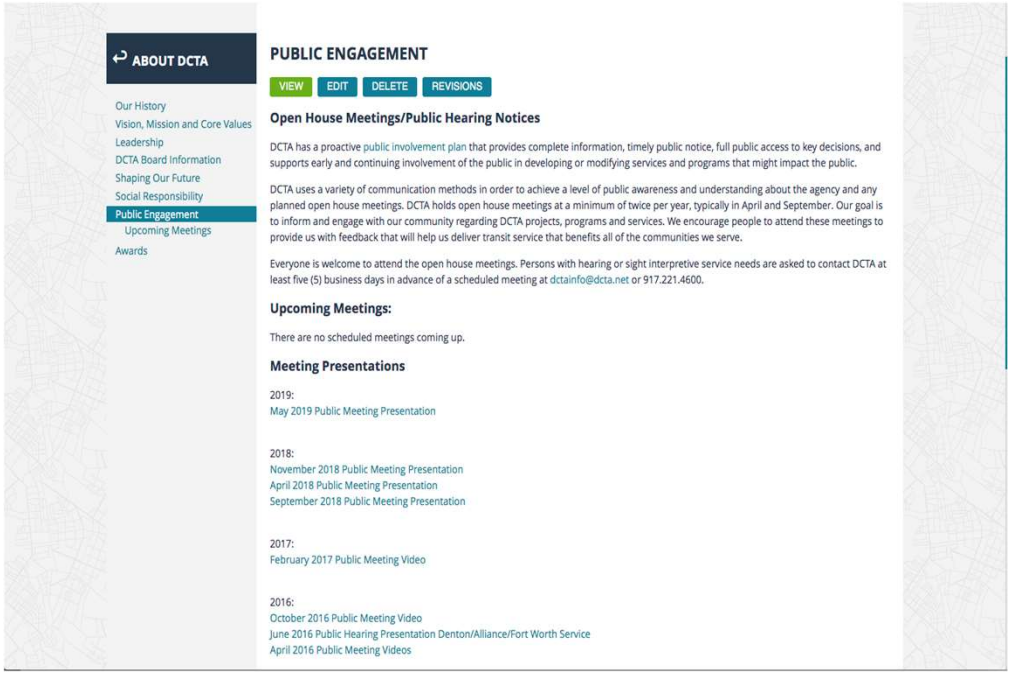

Online Feedback Form:

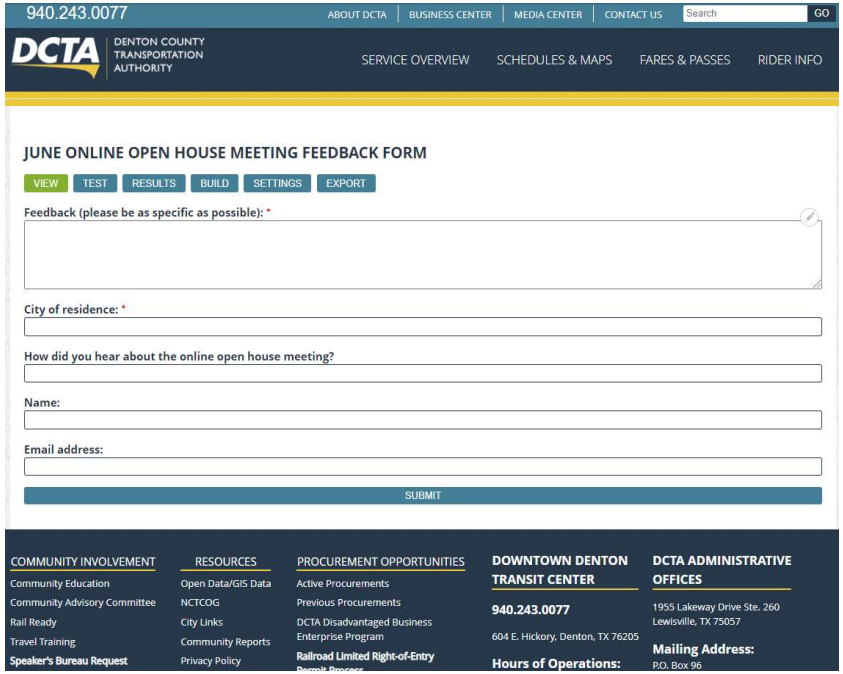

DCTA Website

Webpage Results:

- Total page views – 1,087
- Average time spent on page – 2:01 minutes
- Bounce rate – 76.13%
- Top 5 sources/referrals
  - Twitter
  - GovDelivery
  - Facebook
  - Direct
  - Denton Record Chronicle Digital Banner Ad

Media Center Results:

- Total page views – 335
- Average time spent on page –2:21 minutes
- Media Center Shares – 33
- Bounce rate – 60.14%
- Top 5 sources/referrals
  - GovDelivery
  - Google
  - Direct
  - Cision News Release
  - Facebook



Media Relations

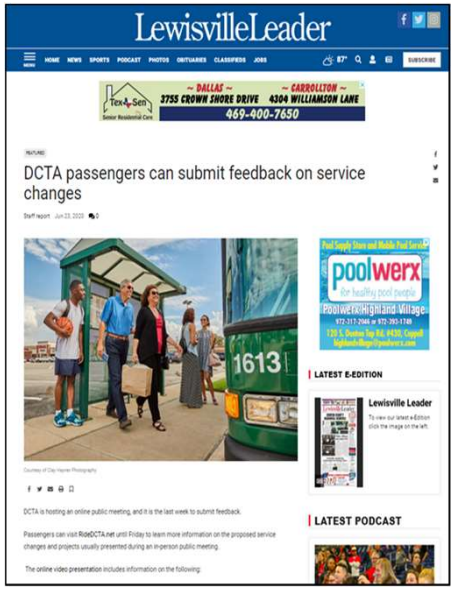







TOTAL MENTIONS

6

TOTAL REACH

109,900

Print Advertising

Denton Record-Chronicle

- Impressions – 100,018
- Clicks –91
- DCTA Webpage Redirect – 78 Views
- Bounce Rate – 93.24%

Star Local Media

- Impressions – 227,222

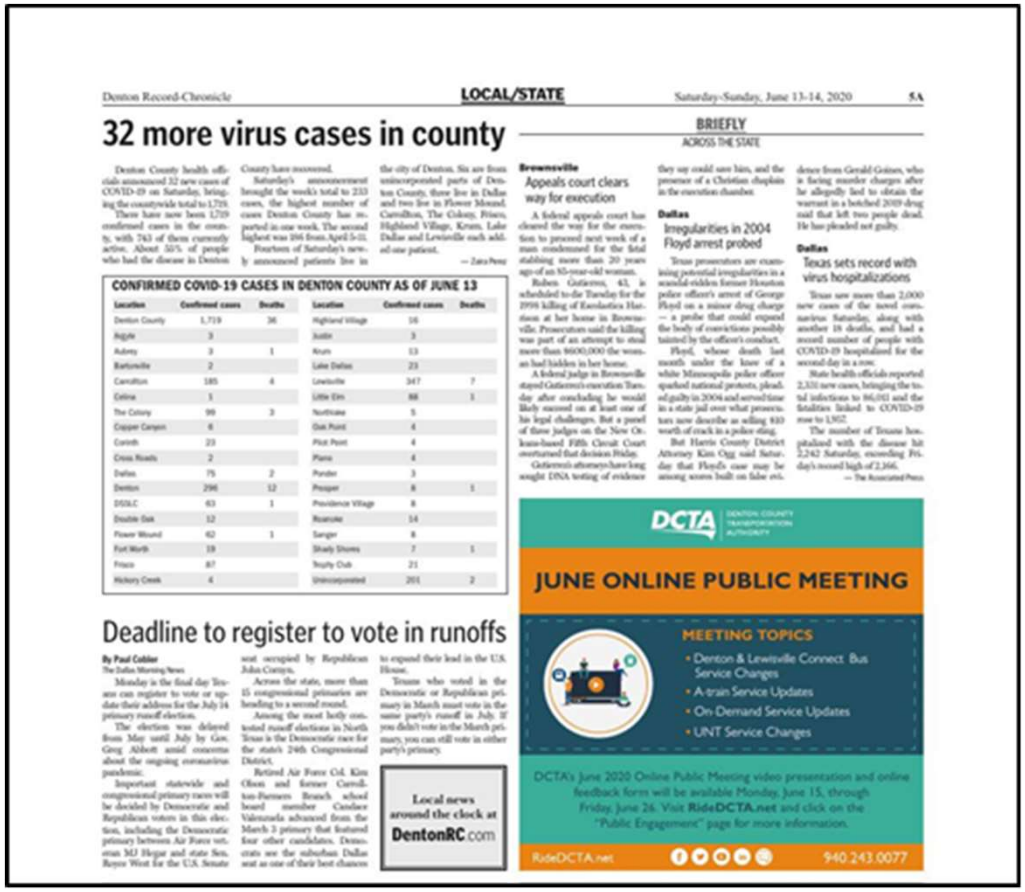

Denton Record-Chronicle LOCAL/STATE Saturday-Sunday, June 13-14, 2020 5A

32 more virus cases in county

Denton County health officials announced 32 new cases of COVID-19 on Saturday, bringing the countywide total to 1,719. There have now been 1,719 confirmed cases in the county, with 743 of them currently active. About 56% of people who had the disease in Denton County have recovered.

Saturday's announcement brought the week's total to 233 cases, the highest number of cases Denton County has reported in one week. The second highest was 166 from April 5-11.

Fourteen of Saturday's newly announced patients live in the city of Denton. Six are from unincorporated parts of Denton County, three live in Dallas and two live in Flower Mound. Carrollton, The Colony, Frisco, Highland Village, Krum, Lake Dallas and Lewisville each added one patient.

— Zaira Perez

CONFIRMED COVID-19 CASES IN DENTON COUNTY AS OF JUNE 13

Location	Confirmed cases	Deaths	Location	Confirmed cases	Deaths
Denton County	1,719	36	Highland Village	16	
Argyle	3		Justin	3	
Aubrey	3	1	Krum	13	
Bartonville	2		Lake Dallas	23	
Carrollton	185	4	Lewisville	347	7
Celina	1		Little Elm	88	1
The Colony	99	3	Northlake	5	
Copper Canyon	6		Oak Point	4	
Corinth	23		Pilot Point	4	
Cross Roads	2		Plano	6	
Dallas	75	2	Ponder	3	
Denton	296	12	Prosper	8	1
DISD,C	63	1	Providence Village	8	
Double Oak	12		Roanoke	14	
Flower Mound	62	1	Sanger	8	
Fort Worth	19		Shady Shores	7	1
Frisco	87		Trophy Club	21	
Hickory Creek	4		Unincorporated	201	2

Deadline to register to vote in runoffs

By Paul Cobler
The Dallas Morning News

Monday is the final day Texans can register to vote or update their address for the July 14 primary runoff election.

The election was delayed from May until July by Gov. Greg Abbott amid concerns about the ongoing coronavirus pandemic.

Important statewide and congressional primary races will be decided by Democratic and Republican voters in this election, including the Democratic primary between Air Force veteran MJ Hegar and state Sen. Royce West for the U.S. Senate seat occupied by Republican John Cornyn.

Across the state, more than 15 congressional primaries are heading to a second round.

Among the most hotly contested runoff elections in North Texas is the Democratic race for the state's 24th Congressional District.

Retired Air Force Col. Kim Olson and former Carrollton-Farmers Branch school board member Candace Valenzuela advanced from the March 3 primary that featured four other candidates. Democrats see the suburban Dallas seat as one of their best chances to expand their lead in the U.S. House.

Texans who voted in the Democratic or Republican primary in March must vote in the same party's runoff in July. If you didn't vote in the March primary, you can still vote in either party's primary.

Local news around the clock at DentonRC.com

BRIEFLY
ACROSS THE STATE

Brownsville
Appeals court clears way for execution

A federal appeals court has cleared the way for the execution to proceed next week of a man condemned for the fatal stabbing more than 20 years ago of an 85-year-old woman.

Ruben Gutierrez, 43, is scheduled to die Tuesday for the 1998 killing of Eusebia Hardeen at her home in Brownsville. Prosecutors said the killing was part of an attempt to steal more than $600,000 the woman had hidden in her home.

A federal judge in Brownsville stayed Gutierrez's execution Tuesday after concluding he would likely succeed on at least one of his legal challenges. But a panel of three judges on the New Orleans-based Fifth Circuit Court overturned that decision Friday.

Gutierrez's attorneys have long sought DNA testing of evidence they say could save him, and the presence of a Christian chaplain in the execution chamber.

Dallas
Irregularities in 2004 Floyd arrest probed

Texas prosecutors are examining potential irregularities in a scandal-ridden former Houston police officer's arrest of George Floyd on a minor drug charge — a probe that could expand the body of convictions possibly tainted by the officer's conduct.

Floyd, whose death last month under the knee of a white Minneapolis police officer sparked national protests, pleaded guilty in 2004 and served time in a state jail over what prosecutors now describe as selling $10 worth of crack in a police sting.

But Harris County District Attorney Kim Ogg said Saturday that Floyd's case may be among scores built on false evi-

dence from Gerald Goines, who is facing murder charges after he allegedly lied to obtain the warrant in a botched 2019 drug raid that left two people dead. He has pleaded not guilty.

Dallas
Texas sets record with virus hospitalizations

Texas saw more than 2,000 new cases of the novel coronavirus Saturday, along with another 18 deaths, and had a record number of people with COVID-19 hospitalized for the second day in a row.

State health officials reported 2,331 new cases, bringing the total infections to 86,101 and the fatalities linked to COVID-19 rose to 1,957.

The number of Texans hospitalized with the disease hit 2,242 Saturday, exceeding Friday's record high of 2,166.

— The Associated Press

DCTA DENTON COUNTY TRANSPORTATION AUTHORITY
JUNE ONLINE PUBLIC MEETING
MEETING TOPICS
• Denton & Lewisville Connect Bus Service Changes
• A-train Service Updates
• On Demand Service Updates
• UNT Service Changes
DCTA's June 2020 Online Public Meeting video presentation and online feedback form will be available Monday, June 15, through Friday, June 26. Visit RideDCTA.net and click on the "Public Engagement" page for more information.
RideDCTA.net 940.243.0077

TITLE VI ANALYSIS (FIXED ROUTE ONLY)

DCTA

Title VI Analysis - Overview

What is Title VI?
Title VI is part of the Civil Rights Act of 1964 which ensures that no person in the United States shall, on the ground of race, color, or national origin, be excluded from participation in, be denied the benefits of, or be subjected to discrimination under any program or activity receiving federal financial assistance.

What is a Title VI Analysis?
It is a detailed analysis of proposed fixed-route bus service modifications and/or fare media adjustments to ensure that those modifications do not result in a disparate impact or a disproportionate burden on low-income populations.

DCTA is committed to ensuring that no person is excluded from participation in, or denied benefits of, its transit services based on race, color, or national origin.

TITLE VI Analysis – Disparate Impact

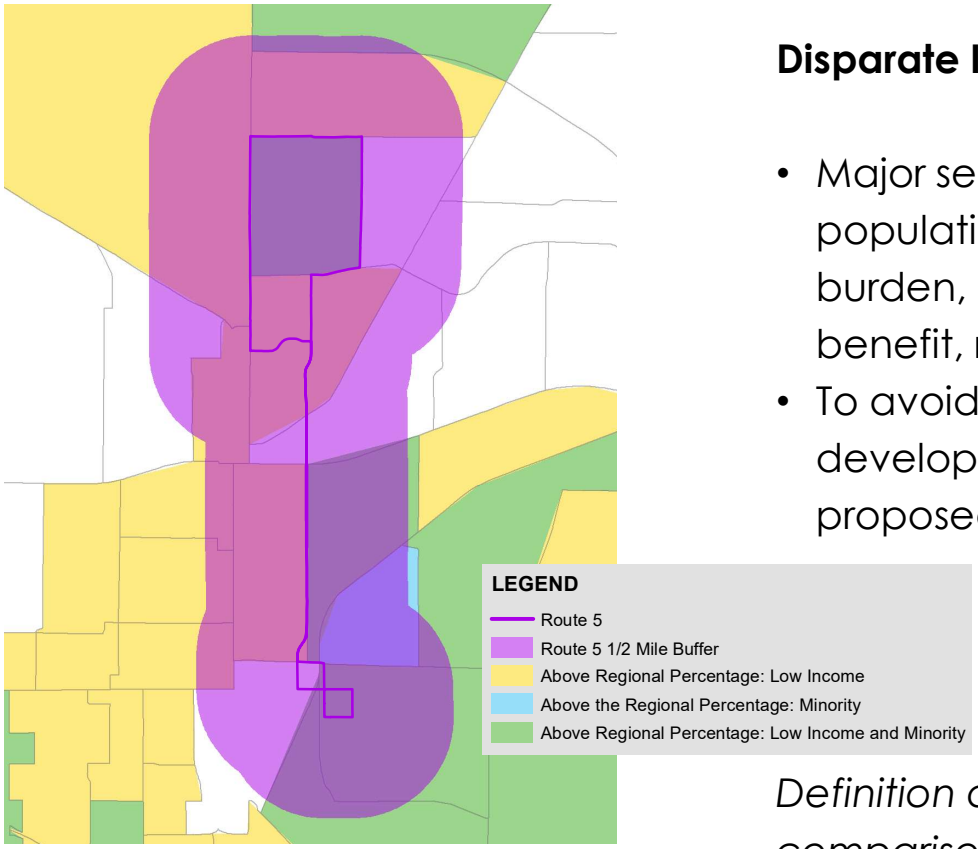

Disparate Impact Test

- Major service changes have a ***disparate impact*** if the minority populations experience five percent more of the cumulative burden, or experience less than five percent of the cumulative benefit, relative to the non-minority populations
- To avoid, minimize, or mitigate disparate impacts, DCTA develops and assesses alternatives and/or modifications to proposed changes that result in adverse impacts

Definition of disparate – essentially different in kind; not allowing comparison

TITLE VI Analysis – Disproportionate Burden

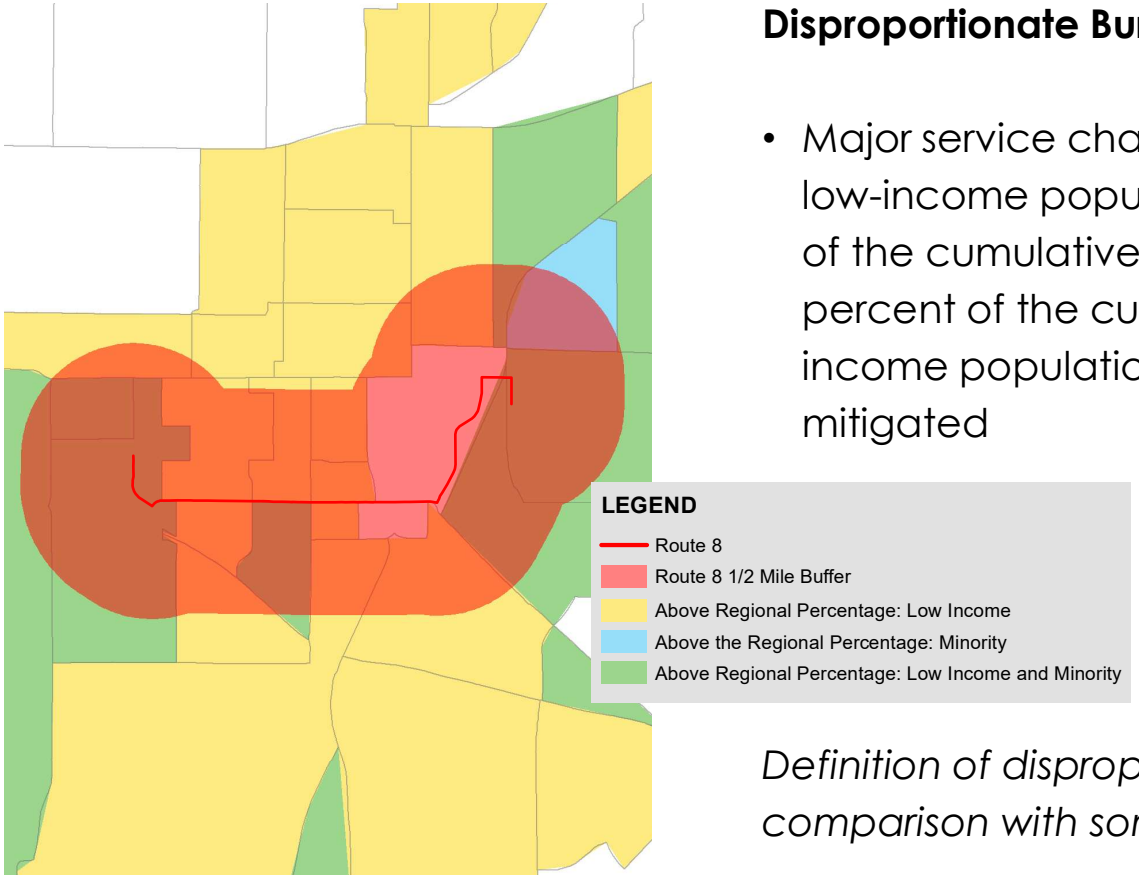

Disproportionate Burden Test

- Major service changes have a ***disproportionate burden*** if low-income populations experience more than five percent of the cumulative burden, or experience less than five percent of the cumulative benefit, relative to non-low-income populations unless the disproportionate impacts are mitigated

Definition of disproportionate – too large or too small in comparison with something else

TITLE VI Analysis – Route 5 Results

Census Block Groups With 1/2 Mile of Denton Connect Route 5

Census Tract	Block Group	Total Population	Total Minority Population	Percent Total Minority	Ratio Total Minority to Regional Percentage	Individuals for Whom Poverty Status in Known	Total Below Poverty Population	Percent Below Poverty	Ratio Below Poverty to Regional Percentage	Minority Population Above Regional Percentage	Low Income Above Regional Percentage	Minority and Low Income Above Regional Percentage	SERVED BY DENTON CONNECT ROUTE 6
0211001	1	883	316	35.8%	0.683	883	129	14.6%	0.803	N	N	N	YES
0205042	2	2,033	979	48.2%	0.919	2,016	655	32.5%	1.785	N	Y	N	YES
0212023	3	2,402	1,628	67.8%	1.293	1,077	485	45.0%	2.475	Y	Y	Y	YES
0205041	1	1,231	725	58.9%	1.124	1,231	286	23.2%	1.277	Y	Y	Y	
0205053	3	950	101	10.6%	0.203	950	88	9.3%	0.509	N	N	N	
0212021	1	1,369	1,281	93.6%	1.785	1,323	593	44.8%	2.463	Y	Y	Y	YES
0206013	3	2,979	1,491	50.1%	0.955	1,197	444	37.1%	2.038	N	Y	N	YES
0205034	4	1,310	539	41.1%	0.785	1,310	234	17.9%	0.982	N	N	N	
0206012	2	813	586	72.1%	1.375	675	339	50.2%	2.760	Y	Y	Y	YES
0206022	2	2,525	1,654	65.5%	1.250	2,525	650	25.7%	1.415	Y	Y	Y	YES
0206023	3	577	500	86.7%	1.653	577	59	10.2%	0.562	Y	N	N	YES
0207003	3	614	203	33.1%	0.631	614	266	43.3%	2.381	N	Y	N	YES
0204011	1	4,984	1,925	38.6%	0.737	4,965	1,448	29.2%	1.603	N	Y	N	YES
0204023	3	1,251	128	10.2%	0.195	1,043	36	3.5%	0.190	N	N	N	YES
0204024	4	762	383	50.3%	0.959	699	132	18.9%	1.038	N	Y	N	YES
0204031	1	628	67	10.7%	0.204	628	206	32.8%	1.803	N	Y	N	YES
0204033	3	834	375	45.0%	0.858	834	380	45.6%	2.504	N	Y	N	YES
0205031	1	3,064	1,799	58.7%	1.120	3,064	1,091	35.6%	1.957	Y	Y	Y	YES
0205032	2	918	374	40.7%	0.777	918	234	25.5%	1.401	N	Y	N	YES
0205033	3	1,376	230	16.7%	0.319	1,376	621	45.1%	2.480	N	Y	N	YES
0205054	4	1,230	110	8.9%	0.171	1,230	17	1.4%	0.076	N	N	N	
0205055	5	1,151	263	22.8%	0.436	1,139	115	10.1%	0.555	N	N	N	
0205051	1	971	99	10.2%	0.195	971	133	13.7%	0.753	N	N	N	YES

Source: US Census Geodatabase: 'ACS_2017_5YR_BG_48_TEXAS.gdb'

TITLE VI Analysis – Route 8 Results

Census Block Groups With 1/2 Mile of Denton Connect Route 8

Census Tract	Block Group	Total Population	Total Minority Population	Percent Total Minority	Ratio Total Minority to Regional Percentage	Individuals for Whom Poverty Status in Known	Total Below Poverty Population	Percent Below Poverty	Ratio Below Poverty to Regional Percentage	Minority Population Above Regional Percentage	Low Income Above Regional Percentage	Minority and Low Income Above Regional Percentage	SERVED BY DENTON CONNECT ROUTE 7
0211003	3	1,256	622	49.5%	0.945	1,256	859	68.4%	3.758	N	Y	N	YES
0211001	1	883	316	35.8%	0.683	883	129	14.6%	0.803	N	N	N	YES
0212023	3	2,402	1,628	67.8%	1.293	1,077	485	45.0%	2.475	Y	Y	Y	YES
0209002	2	2,575	1,398	54.3%	1.036	493	115	23.3%	1.282	Y	Y	Y	YES
0211002	2	995	506	50.9%	0.970	995	600	60.3%	3.314	N	Y	N	YES
0208001	1	1,570	1,025	65.3%	1.246	1,570	848	54.0%	2.968	Y	Y	Y	YES
0207001	1	1,253	454	36.2%	0.691	1,135	399	35.2%	1.932	N	Y	N	YES
0212021	1	1,369	1,281	93.6%	1.785	1,323	593	44.8%	2.463	Y	Y	Y	YES
0206013	3	2,979	1,491	50.1%	0.955	1,197	444	37.1%	2.038	N	Y	N	YES
0207002	2	935	441	47.2%	0.900	935	589	63.0%	3.462	N	Y	N	YES
0208002	2	3,248	1,069	32.9%	0.628	3,248	1,393	42.9%	2.357	N	Y	N	YES
0210004	4	944	492	52.1%	0.994	944	366	38.8%	2.131	N	Y	N	YES
0206012	2	813	586	72.1%	1.375	675	339	50.2%	2.760	Y	Y	Y	YES
0206022	2	2,525	1,654	65.5%	1.250	2,525	650	25.7%	1.415	Y	Y	Y	YES
0206023	3	577	500	86.7%	1.653	577	59	10.2%	0.562	Y	N	N	YES
0207003	3	614	203	33.1%	0.631	614	266	43.3%	2.381	N	Y	N	YES
0209001	1	2,301	1,498	65.1%	1.242	1,863	1,127	60.5%	3.324	Y	Y	Y	YES
0210001	1	694	303	43.7%	0.833	438	297	67.8%	3.726	N	Y	N	YES
0210002	2	3,704	1,793	48.4%	0.924	715	450	62.9%	3.459	N	Y	N	YES
0210003	3	785	464	59.1%	1.128	726	462	63.6%	3.497	Y	Y	Y	YES
0213011	1	3,254	983	30.2%	0.576	3,254	1,727	53.1%	2.916	N	Y	N	

Source: US Census Geodatabase: 'ACS_2017_5YR_BG_48_TEXAS.gdb'

TITLE VI Analysis - Findings

Route 5 Results:

- 18 of the 23 census block groups associated with Route 5's service area are also located in the Route 6 service area
- Findings demonstrate that Routes 5 and Route 6 serve the same communities and that minority and low-income populations will be able to access Route 6 to get to their destinations and connect to the larger DCTA network

Route 8 Results:

- 20 of the 21 census block groups associated with Route 8's service area also located in the Route 8 service area
- Findings demonstrate that Routes 8 and 7 serve the same communities and that minority and low-income populations will be able to access Route 7 to get to their destinations and connect to the larger DCTA network

DCTA's initial Title VI Analysis and review of demographic characteristics associated with the proposed fixed route modifications demonstrates that no adverse disparate impacts will result from the proposed service changes.

TITLE VI Analysis Contact

Denton County Transportation Authority (DCTA) complies with Title VI of the Civil Rights Act and provides services and operates programs without regard to race, color, and national origin in accordance with Title VI. Any person who believes he or she has been subjected to an unlawful discriminatory practice under Title VI may file a complaint with DCTA.

For more Information about DCTA's Title VI obligations and the procedures to file a complaint contact 972.221.4600, email dctainfo@dcta.net or visit our offices 1955 Lakeway Drive, Suite 260, Lewisville, TX 75057.

A complaint may also be filed directly with the Federal Transit Administration's Office of Civil Rights, Attention: Title VI Programs Coordinator, East Building, 5th Floor-TCR, 1200 New Jersey Avenue, SE, Washington, DC 20590.



PUBLIC COMMENTS

Public Comments – A-train

Topic: A-train

- Can you add one more earlier train?
- The current A-train schedule is totally unacceptable. – Denton resident
- Would it be likely to return to the previous schedule or adding back the 5 am train? I find the current schedule a hassle driving to Carrolton to catch DART. – Carrollton resident
- What about the people who are looking for jobs in Dallas and have no way to get to work via the train? By you cutting out the train service there are those who are looking for work and if a job is offered have no way to get there because the train will only run every two hours. Please reconsider this option, this disease will not last a lifetime but those who count on the train need some sort reassurance. - Carrollton resident
- It has become harder and harder to ride the train because of the changes in scheduled times. We have talked about riding the train and the schedule continues to be a deterrent. It would be beneficial if the train trip from Trinity Mills to Downtown Denton would not take 40 minutes to 1 hour one way. – Denton resident

Public Comments – A-train Con't

Topic: A-train Con't

- Regarding the specific DCTA service changes, I believe that the A-train is DCTA's signature service and the service that has the most potential to increase ridership and operational frequency going forward. As a result, I think that concerted efforts should be made to try to increase the service frequency on weekdays and Saturday as quickly as possible. – Lantana resident
- There are many people who have to be at work at 7 am in Downtown Dallas. If the first train doesn't run until 6 am, it's not possible to make it to work by 7 using the A-train.
- Again, I understand low ridership means low revenue and even though it is not convenient, running once an hour is workable for the average business commuter. However, at a minimum you need to add an earlier run in the mornings. Look at your history and see the volume of riders you had on the 4:50 am run prior to the crisis. I and other riders are not currently taking the train right now because 6 am is too late to get to work on time. I truly hope the board considers the opinions that are submitted in this survey and perhaps research some before voting. I have seen the Board Meetings posted online and so many times the vote seems to go toward whatever is proposed without much question as to what is best for DCTA and the community. I do not mean disrespect, but I hope the Board gets evolved and makes educated decisions before placing a vote. Would anyone vote for a President of the United States just because someone says "OK, this is what we want to do?" – Denton resident

Public Comments – A-train Con't

Topic: A-train Con't

- There are a lot of people who have spent quite a bit of money on an annual regional pass for the train. It doesn't seem right to have spent all that money and not be able to use the train to get to work. Where I work, we pay for our regional annual pass by payroll deduction. They will continue taking the money out of my paycheck for the pass until the end of the year. There is no getting around this. This is and will be a lot of wasted money spent on something I cannot use if the A-train schedule permanently changes to start at 6 am. I have already been unable to use the train since the schedule changed in late March. I believe as the rest of the year goes on, people will begin taking the train again. In my opinion, I think the first train should run at 5 am. Thank you! – Lantana resident

Public Comments – Bus Service Reduction

Topic: Bus Service Reduction

- Not in favor of the permanent reduction of schedule. I often work later into the evening and frequently use the bus as transportation home. – Argyle resident
- I live along Route 5, and as a TWU student who works on campus and is unable to drive I am very distressed to hear that Route 5 is permanently closing down. I have met many people on campus that rely on the Route 5 bus to get home from the University, and the fact that this is a permanent change even once the University reopens is disheartening to say the least. – Carrollton resident
- I ride the bus and once school starts. How are my children going to get home, since you are considering doing away with the routes and drivers. – Dallas resident
- I need there to be more service. I need the old hours of operation on the bus here in Denton. I need the hours of 6 am till 9 pm. I also need Routes 5 and 8 restored. The restricted hours make it harder to find and keep a job. – Highland Village resident

Public Comments – Bus Service Reduction Con't

Topic: Bus Service Reduction Con't

- Unfortunately, these proposed changes will prevent me from continuing to use DCTA's services. The butchered schedules make the train and bus connections completely unworkable. It seems there is no thought given to how the schedules actually line up for real people who would need to use the services. I had just purchased my annual pass in January and only used it for two months. I suspect there will be no refunds. Would really like an earlier start time at Old Town station. – Denton resident
- You may want to consider adding back some service on Route 22. I waited for an hour for the bus around 1:09 pm and I boarded the bus going to Hebron station at the intersection of Business 121 and Bellaire going south bound. The bus was very full and I had to ride to the station.
- No problem with Title VI deleting Routes 5 and 8. Management failed to properly plan the routes in the first place. They could have doubled the frequency on Routes 6 and 7 and cut the waiting time in half. Due to COVID-19 we will only be delivering essential transit service. No one wants one-hour headways, but nothing will get better until the college students (UNT, TWU, NCTC) and the high school kids come back to school. They are 60 + percent of our ridership. – 9-year bus operator.
- My family of three has typically utilized Route 5 as our only use of the bus system. We live on Bell Ave. and both Routes 5 and 6 were passing by northbound and Route 5 came by southbound. Now, it is only Route 6 northbound and nothing southbound since Route 6 doesn't come back down my section of Bell. – Denton resident

Public Comments – Bus Service Reduction Con't

Topic: Bus Service Reduction Con't

- I understand needing to have cut backs for financial reasons, but I think eliminating Route 5 is a mistake, unless you change Route 6 to pick up North Locust to Hercules, Hercules, and Stuart because: (1) N. Locust at Hercules has a bunch of new houses and apartment complexes just being completed, (2) There are apartment complexes down on Hercules, (3) Near Hercules at Stuart is a school, and just east on Hercules is another housing and duplex development some just completed and some still under construction.
- Temporary cut backs during a crisis is one thing, but in the long run how are you going to grow ridership if you ignore all the new housing constructions? To me, it makes sense to eliminate Route 5 only where it overlaps Route 6, and move Route 5 over somehow to go further down Hercules to E. Sherman where another huge housing development under construction.
- If I understand this correctly, I have to take bus 7 home and it takes a very long time to get to my stop at Welch and Eagle so I won't get home until 7pm. I have been taking a Lyft to the train station that is costing me $14 a day which I cant afford to keep doing. Are there any other options? Please reconsider this! There are still people who have to rely on DCTA to get to work. I cannot afford these options. – Highland Village resident

Public Comments – General

Topic: General

- To add to item #1 above, getting more people to ride DCTA's A-train and buses takes a community-wide effort. Around June 1, Trinity Metro released a video approximately three minutes in length thanking Trinity Metro's bus, TRE, and TEXRail operators for their service, especially during the coronavirus pandemic. This video featured Fort Worth Mayor Betsy Price, Fort Worth City Council member Ann Zadeh, Trinity Metro Board President Jeff Davis, Trinity Metro President Bob Baulsir, as well as few other adults and children who live in Fort Worth. Plus, the Tarrant Transit Alliance and other community members donated hundreds of masks to Trinity Metro bus and train operators. Additionally, on June 19, a designated Trinity Metro bus that had been painted black was used to take Fort Worth City Council members Ann Zadeh and Carlos Flores, Trinity Metro staff, and other community members to a march and rally led by longtime Fort Worth resident and activist Opal Lee. I think that these examples of community involvement in support of Trinity Metro and its objectives are the kinds of things that could help DCTA better achieve its objectives as well as more community involvement for DCTA going forward. – Lantana resident

Public Comments – General Con't

Topic: General Con't

- I think that the new downtown Denton on-demand zone is a great idea and needs to be promoted and marketed as much as possible. – Lantana resident
- DCTA needs to continue to work aggressively with current non-member cities, especially Flower Mound, The Colony, and Little Elm to find ways to provide its transit services in those cities. Additionally, DCTA needs to continue to work with the current member cities of Denton, Lewisville and Highland Village to better promote, increase ridership on, and improve and expand its current transit services in these cities. – Lantana resident

OVERALL SUMMARY

Overall Summary

Budget:
- Social Media – $1,211
- Advertising – $3,366
- Total Spend – $4,577



Overall Engagement:
- Total Promotional Timeframe – June 15 – 26, 2020
- Total Impressions (across all efforts) – 657,724
- Total Engagement (across all efforts) – 3,051
- Total Number of Comments Submitted – 25

Summary of Comments:
- A-train – Add an early-morning run to address commute needs; consider increasing frequency (at least during peak times)
- Bus – Review removal of Routes 5 and 8 and/or consider increasing frequency of Route 6
- On-Demand – Further promote the evening on-demand zone out of the DDTC

Board of Directors Memo

July 23, 2020

SUBJECT: Budget Workshop Follow-up Items

Background

A budget workshop was held with the DCTA Board of Directors on June 18, 2020 to review the proposed FY2021 Operating & Capital Budget. Additional information requested by Board members at that meeting and in additional correspondence since that meeting is noted in the table below:

Item	Status
Rail Service at 30-minute vs 60-minute headways • Ridership Data • Cost of Service	This information is included with Informational Report 5, Information Requested by Board Members at the June Board Meeting, and Regular Item 1, Consider Extension of Existing COVID-19 Service Levels
Breakdown of CARES Act Funding	See Exhibit 1, CARES Act Funding Detail Projections
Cost of Compliance	Item suggested for inclusion in Transformation Initiative
Rail Purchased Transportation Contract: FY19-FY21	See Exhibit 2, Rail Purchased Transportation Detail
Administrative Overhead	Item suggested for inclusion in Transformation Initiative
Connect Ridership associated with UNT and NCTC's Connect Fee	See Exhibit 3, Student Survey Data for summary of existing survey data More detailed ridership information could be collected through a digital fare media system as part of the FY2021 Expanded Level Project "Integrated Fare Payment Solution"
Debt Refinancing Options	Staff is meeting with DCTA's financial advisors in July and will bring options to the Board for consideration at the August Board meeting
Benefit Survey • Rates by Coverage Type • Employee/Employer Cost Sharing • Plan Deductibles	See Exhibit 4, Benefit Survey Information: • 4a: Medical • 4b: Dental • 4c: Vision
Changes Made to Long Range Financial Plan • Fare Increase Assumptions • Ridership Assumptions • Service Level Assumptions	See Exhibit 5, FY2021 Long Range Financial Plan

Financial Impact

The current proposed FY2021 operating and capital budget includes $31.8 million in expenses (DCTA & NTMC), $53.4 million in revenues, and $9.3 million in capital projects.

Recommendation

For information only. No action required.

Exhibits

Exhibit 1, CARES Act Funding Detail Projections
Exhibit 2, Rail Purchased Transportation Detail
Exhibit 3, Student Survey Data
Exhibit 4 (a-c), Benefit Survey Information
Exhibit 5, FY2021 Long Range Financial Plan

Submitted By: Amanda Riddle

Amanda Riddle
Senior Manager of Budget

Final Review:

Marisa Perry, CPA
Chief Financial Officer/VP of Finance

CARES ACT FUNDING DETAIL PROJECTIONS

CARES ACT FUNDING DETAIL - BUS

*Includes Departments: Bus Service Administration (500/700), Bus Operations Management (505), Fixed Route (511/711/513/713), Customer Service (570/770), Supervisors & Dispatch (580/780)

	FY2020	FY2021	FY2022	GRAND TOTAL
SALARIES, WAGES & BENEFITS:	$ 2,164,009	$ 3,693,673	$ 1,437,831	$ 7,295,513
OUTSOURCED SERVICES & CHARGES:	$ 195,450	$ 813,764	$ 316,773	$ 1,325,987
MATERIALS & SUPPLIES:	$ 71,129	$ 378,069	$ 147,170	$ 596,368
UTILITIES:	$ 61,615	$ 183,900	$ 71,586	$ 317,101
INSURANCE:	$ 124,216	$ 198,468	$ 77,257	$ 399,941
PURCHASED TRANSPORTATION SVCS:	$ -	$ -	$ -	$ -
LEASES & RENTALS:	$ 2,259	$ 4,152	$ 1,616	$ 8,027
LESS FAREBOX & MISC. INCOME:	$ (227,877)	$ (215,746)	$ (83,983)	$ (527,606)
NET DRAWDOWN	$ 2,390,801	$ 5,056,280	$ 1,968,250	$ 9,415,331

CARES ACT FUNDING DETAIL - RAIL

(1): CARES Act Funding includes the following items from First Transit Purchased Transportation contract: Dispatch Operations, A-train Mgmt/Overhead Fee, Train Crew Hours

	FY2020	FY2021	FY2022	GRAND TOTAL
SALARIES, WAGES & BENEFITS:	$ 328,165	$ 288,429	$ 120,096	$ 736,690
OUTSOURCED SERVICES & CHARGES:	$ 85,561	$ 307,605	$ 128,081	$ 521,247
MATERIALS & SUPPLIES:	$ 195,518	$ 837,500	$ 348,719	$ 1,381,737
UTILITIES:	$ 139,891	$ 265,768	$ 110,661	$ 516,320
INSURANCE:	$ 745,341	$ 1,338,961	$ 557,517	$ 2,641,819
PURCHASED TRANSPORTATION SVCS (1):	$ 2,705,768	$ 4,384,640	$ 1,825,678	$ 8,916,086
LEASES & RENTALS:	$ 941	$ -	$ -	$ 941
LESS FAREBOX & MISC. INCOME:	$ (316,222)	$ (248,579)	$ (103,503)	$ (668,304)
NET DRAWDOWN	$ 3,884,963	$ 7,174,324	$ 2,987,249	$ 14,046,536

TOTAL CARES ACT FUNDING:	$ 6,275,764	$ 12,230,604	$ 4,955,499	$ 23,461,867

RAIL PURCHASED TRANSPORTATION DETAIL

CONTRACT DETAIL	FY2021 UNITS	FY2021 RATE	FY2021 PROPOSED BUDGET	
TRAIN CREW HOURS	10,200	$171.80	$1,752,360	**FIRST TRANSIT**
CAR MILES	403,872	$4.48	$1,809,348	
MANAGEMENT/ADMINISTRATION	12 Months	$153,419	$1,841,030	
DISPATCH OPERATIONS	12 Months	$49,271	$591,248	
FACILITY MAINTENANCE	12 Months	$246,912	$2,962,942	
VEHICLE MAINTENANCE	Annual Allowance		$200,000	
MAINTENANCE OF WAY	Annual Allowance		$260,000	
ASSET MANAGEMENT/TECHNOLOGY	12 Months	$7,049	$84,592	
MISC. CREW COSTS	90 Hours	$83.72	$7,535	
TICKET VENDING MACHINE MAINTENANCE & REVENUE COLLECTION			$40,334	**DART ILA**
TRINITY MILLS PLATFORM MAINTENANCE	12 Months	$1,380	$16,560	
TRINITY MILLS RESTROOM MAINTENANCE			$5,901	
TOTAL			$9,571,850	

CONTRACT DETAIL	FY2020 REVISED UNITS	FY2020 REVISED RATE	FY2020 REVISED BUDGET
TRAIN CREW HOURS (October - March)	8,554	$142.21	$1,216,436
TRAIN CREW HOURS (April - September)	5,100	$171.80	$876,180
CAR MILES (October - March)	245,084	$3.50	$857,793
CAR MILES (April - September)	204,000	$4.48	$913,920
MANAGEMENT/ADMINISTRATION (October - March)	6 Months	$149,351	$896,104
MANAGEMENT/ADMINISTRATION (April - September)	6 Months	$141,514	$849,086
DISPATCH OPERATIONS	12 Months	$47,557	$570,682
FACILITY MAINTENANCE	12 Months	$237,255	$2,847,060
VEHICLE MAINTENANCE	Annual Allowance		$200,000
MAINTENANCE OF WAY	Annual Allowance		$260,000
ASSET MANAGEMENT/TECHNOLOGY	12 Months	$6,932	$83,182
MISC. CREW COSTS	90 Hours	$81.42	$7,328
TICKET VENDING MACHINE MAINTENANCE & REVENUE COLLECTION			$38,413
TRINITY MILLS PLATFORM MAINTENANCE	12 Months	$1,380	$16,560
TRINITY MILLS RESTROOM MAINTENANCE			$5,729
TOTAL			$9,638,473

CONTRACT DETAIL	FY2020 UNITS	FY2020 RATE	FY2020 ADOPTED BUDGET	
TRAIN CREW HOURS	17,000	$142.21	$2,417,570	**FIRST TRANSIT**
CAR MILES	494,285	$3.50	$1,729,998	
MANAGEMENT/ADMINISTRATION	12 Months	$149,335	$1,792,023	
DISPATCH OPERATIONS	12 Months	$47,557	$570,682	
FACILITY MAINTENANCE	12 Months	$237,255	$2,847,060	
VEHICLE MAINTENANCE	Annual Allowance		$200,000	
MAINTENANCE OF WAY	Annual Allowance		$260,000	
ASSET MANAGEMENT/TECHNOLOGY	12 Months	$6,932	$83,182	
MISC. CREW COSTS	90 Hours	$81.42	$7,328	
TICKET VENDING MACHINE MAINTENANCE & REVENUE COLLECTION			$38,413	**DART ILA**
TRINITY MILLS PLATFORM MAINTENANCE	12 Months	$1,380	$16,560	
TRINITY MILLS RESTROOM MAINTENANCE			$5,729	
TOTAL			$9,968,545	

CONTRACT DETAIL	FY2019 UNITS	FY2019 RATE	FY2019 ACTUAL EXPENSE
TRAIN CREW HOURS	17,022	$137.99	$2,348,897
CAR MILES	352,721	$3.74	$1,319,178
MANAGEMENT/ADMINISTRATION	12 Months	$147,590	$1,771,081
DISPATCH OPERATIONS	12 Months	$46,628	$559,535
FACILITY MAINTENANCE	12 Months	$231,316	$2,775,792
VEHICLE MAINTENANCE	Annual Allowance		$171,716
MAINTENANCE OF WAY	Annual Allowance		$205,477
ASSET MANAGEMENT/TECHNOLOGY	12 Months	$6,802	$81,623
MISC. CREW COSTS	90 Hours	$79.19	$0
TICKET VENDING MACHINE MAINTENANCE & REVENUE COLLECTION			$65,821
TRINITY MILLS PLATFORM MAINTENANCE	12 Months	$1,380	$16,560
TRINITY MILLS RESTROOM MAINTENANCE			$0
TOTAL			$9,315,681

DENTON COUNTY TRANSPORTATION AUTHORITY

STUDENT DATA COLLECTED THROUGH PAST DCTA SURVEYS

DCTA 2019 Passenger Satisfaction Survey

- 56% of respondents use UNT Campus Shuttle (total respondents – 2,629)
- 49% of respondents use DCTA services to get to school

DCTA 2019 North Texas Xpress Point in Time Survey

- 32% of respondents use North Texas Xpress to travel to School (UNT and TWU)

DCTA 2018 A-train Point in Time Survey

- 29% of respondents use the A-train to get to school (total respondents –822)

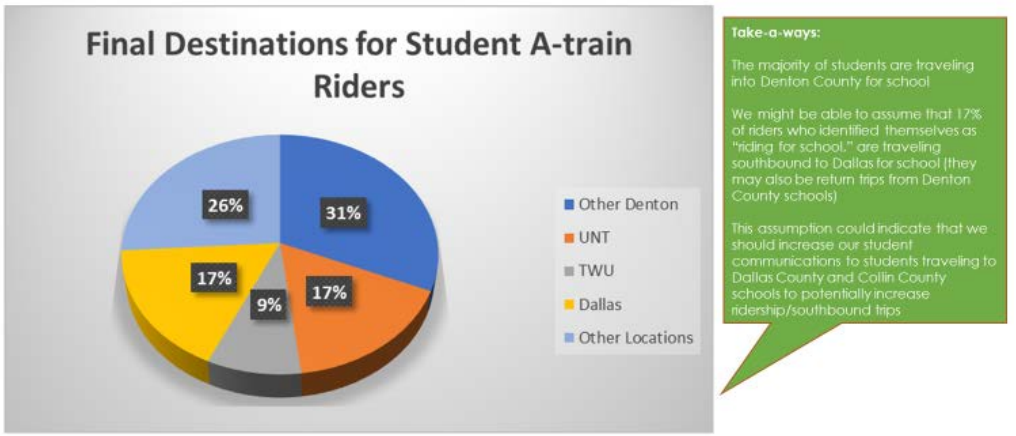

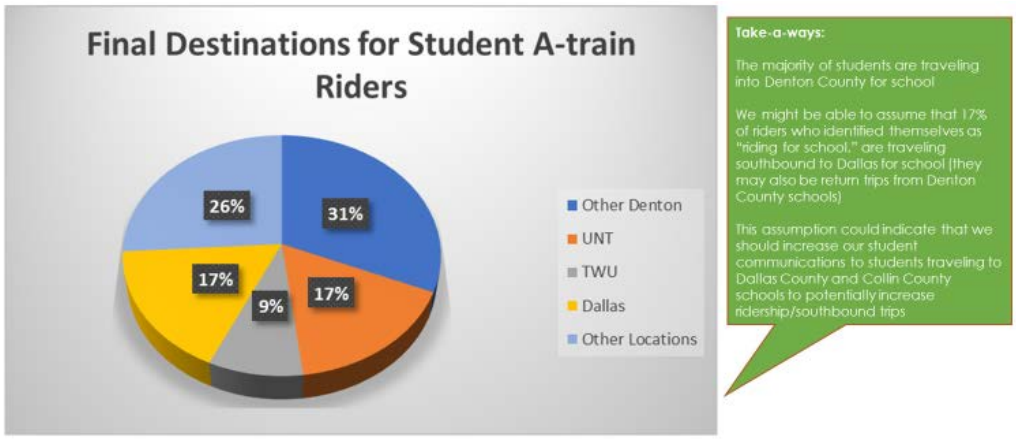

DCTA 2017 Passenger Satisfaction Survey

- 40% of respondents use UNT Campus Shuttle Services (total respondents – 2,617)
- 43% use DCTA services to get to school

DCTA 2015 Passenger Satisfaction Survey

- 28% of respondents use DCTA to get to school (total respondents – 1,860)
- 28% of respondents use DCTA services to get to school

Benefit Survey Results
7/15/2020

MEDICAL

	EE Only - Per Month			EE+ Children Per Month			EE+ Spouse Per Month			Family Per Month			Indiv / Family Out-Of-Pocket Max		Indiv / Family Deductible		Coinsurance	Out-Of-Network Coverage	Urgent Care	Emergency Room
	ER	EE	Total Cost	ER	EE	Total Cost	ER	EE	Total Cost	ER	EE	Total Cost								
Denton County Transportation Authority (DCTA) Medical Plan	$ 770.08	$ -	$ 770.08	$ 1,160.74	$ 167.42	$ 1,328.16	$ 1,325.31	$ 237.95	$ 1,563.26	$ 1,687.74	$ 393.28	$ 2,081.02	$ 2,500	$ 5,000	$ 750	$ 1,500	20%	Y	100% after $55 copay (in-network)	85% after $100 copay
DCTA Cost Sharing	*100%*	*0%*		*87%*	*13%*		*85%*	*15%*		*81%*	*19%*									
North Texas Mobility Corporation (NTMC) PPO Medical Plan	$ 795.89	$ -	$ 795.89	$ 1,177.91	$ 294.48	$ 1,472.39	$ 1,400.75	$ 350.20	$ 1,750.95	$ 2,037.48	$ 509.36	$ 2,546.84	$ 7,150	$ 14,300	$ 5,000	$ 10,000	20% after deductible and copay	N	$50 copay	20% co-insurance after deductible and $300 copay
NTMC Cost Sharing	*100%*	*0%*		*80%*	*20%*		*80%*	*20%*		*80%*	*20%*									
North Texas Mobility Corporation (NTMC) HDHP Medical Plan	$ 715.28	$ -	$ 715.28	$ 1,058.61	$ 264.66	$ 1,323.27	$ 1,258.88	$ 314.72	$ 1,573.60	$ 1,831.10	$ 457.78	$ 2,288.88	$ 6,350	$ 12,700	$ 2,800	$ 5,400	20% after deductible	N	20% after deductible	20% co-insurance after deductible
NTMC Cost Sharing	*100%*	*0%*		*80%*	*20%*		*80%*	*20%*		*80%*	*20%*									
City of Denton Medical Gold Plan	$ 1,254.00	$ 110.00	$ 1,364.00	$ 1,254.00	$ 308.00	$ 1,562.00	$ 1,254.00	$ 242.00	$ 1,496.00	$ 1,254.00	$ 448.00	$ 1,702.00	$ 3,000	$ 6,000	$ 750	$ 1,500	10%		$75	$ 500.00
City of Denton Cost Sharing	*92%*	*8%*		*80%*	*20%*		*84%*	*16%*		*74%*	*26%*									
City of Denton Medical Silver Plan	$ 1,254.00	$ 42.00	$ 1,296.00	$ 1,254.00	$ 170.00	$ 1,424.00	$ 1,254.00	$ 138.00	$ 1,392.00	$ 1,254.00	$ 228.00	$ 1,482.00	$ 6,000	$ 12,000	$ 1,500	$ 3,000	20%		$75	$ 500.00
City of Denton Cost Sharing	*97%*	*3%*		*88%*	*12%*		*90%*	*10%*		*85%*	*15%*									
City of HV BCBS PPO Medical w/ Wellness Discount	$ 816.78	$ 56.15	$ 872.93	$ 1,339.75	$ 275.24	$ 1,614.99	$ 1,588.46	$ 332.06	$ 1,920.52	$ 2,429.07	$ 364.40	$ 2,793.47	$ 2,500	$ 5,000	$ 500	$ 1,000	20%		$50	$ 250.00
City of HV Cost Sharing	*94%*	*6%*		*83%*	*17%*		*83%*	*17%*		*87%*	*13%*									
City of HV PPO Medical Plan WITHOUT Wellness Discount	$ 791.78	$ 81.15	$ 872.93	$ 1,314.75	$ 300.24	$ 1,614.99	$ 1,563.46	$ 357.06	$ 1,920.52	$ 2,404.07	$ 389.40	$ 2,793.47	$ 2,500	$ 5,000	$ 500	$ 1,000	20%		$50	$ 250.00
City of HV Cost Sharing	*91%*	*9%*		*81%*	*19%*		*81%*	*19%*		*86%*	*14%*									
City of HV HSA Medical Plan w/ Wellness Discount	$731.20 + $100 ER HSA Contribution	$ -	$ 831.20	$1164.12+ $200 ER HSA Contribution	$ 188.62	$ 1,552.74	$1379.62+ $200 ER HSA Contribution	$ 229.02	$ 1,808.64	$2082.22+ $200 ER HSA Contribution	$ 257.60	$ 2,539.82	$ 4,000	$ 8,000	$ 3,000	$ 6,000	100%		deductible	deductible
City of HV Cost Sharing	*100%*	*0%*		*88%*	*12%*		*87%*	*13%*		*89%*	*11%*									
City of HV HSA Medical Plan WITHOUT Wellness Discount	$731.20 + $75 ER HSA Contribution	$ -	$ 806.20	$1139.12 + $200 ER HSA Contribution	$ 213.62	$ 1,552.74	$1354.62+ $200 ER HSA Contribution	$ 254.02	$ 1,808.64	$2057.22+ $200 ER HSA Contribution	$ 282.60	$ 2,539.82	$ 4,000	$ 8,000	$ 3,000	$ 6,000	100%		deductible	deductible
City of HV Cost Sharing	*100%*	*0%*		*86%*	*14%*		*86%*	*14%*		*89%*	*11%*									
City of Lewisville Catastrophic Plan (CAT) Local Plus Network	$ 707.20	$ 16.00	$ 723.20	$ 547.95	$ 66.00	$ 613.95	$ 739.12	$ 91.00	$ 830.12	$ 1,512.83	$ 158.00	$ 1,670.83	$ 6,350	$ 12,700	$ 5,000	$ 10,000	PCP, specialist 20% coinsurance, preventative covered 100%	Y	deductible, then 20% coinsurance	deductible, then 20% coinsurance
City of Lewisville Cost Sharing	*98%*	*2%*		*89%*	*11%*		*89%*	*11%*		*91%*	*9%*									
City of Lewisville Health Savings Account (HSA) in Open Access Plus Network	$ 719.45	$ 29.00	$ 748.45	$ 452.70	$ 199.99	$ 652.69	$ 602.06	$ 274.00	$ 876.06	$ 1,282.05	$ 467.00	$ 1,749.05	$ 5,950	$ 11,900	$ 3,000	$ 6,000	In network preventative care, immun. Generic drugs covered 100%	Y	deductible, then 20% coinsurance	deductible, then 20% coinsurance
City of Lewisville Cost Sharing	*96%*	*4%*		*69%*	*31%*		*69%*	*31%*		*73%*	*27%*									
City of Lewisville Health Reimbursement Account Plan (HRA) in Local Plus Network	$ 841.54	$ 39.00	$ 880.54	$ 501.50	$ 270.00	$ 771.50	$ 663.69	$ 372.00	$ 1,035.69	$ 1,430.72	$ 631.00	$ 2,061.72	$ 6,000	$ 12,000	$ 2,000	$ 4,000	In network preventative care, immun. covered 100%	Y	deductible, then 20% coinsurance	deductible, then 20% coinsurance

MEDICAL

	EE Only - Per Month			EE+ Children Per Month			EE+ Spouse Per Month			Family Per Month			Indiv	Family	Indiv	Family				
	ER	EE	Total Cost	ER	EE	Total Cost	ER	EE	Total Cost	ER	EE	Total Cost	Out-Of-Pocket Max		Deductible		Coinsurance	Out-Of-Network Coverage	Urgent Care	Emergency Room
City of Lewisville Cost Sharing	*96%*	*4%*		*65%*	*35%*		*64%*	*36%*		*69%*	*31%*									
Cap Metro HDHP with HSA ENHANCED	$ 436.84	$ 8.92	$ 445.76	$ 741.73	$ 110.54	$ 852.27	$ 856.26	$ 148.72	$ 1,004.98	$ 1,146.12	$ 245.34	$ 1,391.46	$ 5,000	$ 10,000	$ 2,800	$ 5,600	20%	Y	20% after deductible	20% after deductible
Cap Metro Cost Sharing	*98%*	*2%*		*87%*	*13%*		*85%*	*15%*		*82%*	*18%*									
Cap Metro HDHP with HSA	$ 423.47	$ 22.29	$ 445.76	$ 708.03	$ 144.24	$ 852.27	$ 814.93	$ 190.05	$ 1,004.98	$ 1,085.46	$ 306.00	$ 1,391.46	$ 5,000	$ 10,000	$ 2,800	$ 5,600	20%	Y	20% after deductible	20% after deductible
Cap Metro Cost Sharing	*95%*	*5%*		*83%*	*17%*		*81%*	*19%*		*78%*	*22%*									
Cap Metro Core Plan ENHANCED	$ 544.28	$ 28.65	$ 572.93	$ 936.15	$ 159.27	$ 1,095.42	$ 1,083.35	$ 79.64	$ 1,291.69	$ 1,455.91	$ 332.52	$ 1,788.43	$ 4,000	$ 8,000	$ 1,000	$ 2,000	20%	Y	$50 copay	$150 copay
Cap Metro Cost Sharing	*95%*	*5%*		*85%*	*15%*		*93%*	*7%*		*81%*	*19%*									
Cap Metro Core Plan	$ 572.10	$ 45.83	$ 617.93	$ 892.84	$ 202.58	$ 1,095.42	$ 1,030.23	$ 261.46	$ 1,291.69	$ 1,377.95	$ 410.48	$ 1,788.43	$ 4,000	$ 8,000	$ 1,000	$ 2,000	20%	Y	$50 copay	$150 copay
Cap Metro Cost Sharing	*93%*	*7%*		*82%*	*18%*		*80%*	*20%*		*77%*	*23%*									
Cap Metro Buy-Up Plan - ENHANCED	$ 590.41	$ 65.60	$ 656.01	$ 1,039.11	$ 215.17	$ 1,254.28	$ 1,207.68	$ 271.35	$ 1,479.03	$ 1,634.22	$ 413.54	$ 2,047.76	$ 3,000	$ 6,000	$ 750	$ 1,500	10%	Y	$30 copay	$150 copay
Cap Metro Cost Sharing	*90%*	*10%*		*83%*	*17%*		*82%*	*18%*		*80%*	*20%*									
Cap Metro Buy-Up Plan	$ 570.73	$ 85.28	$ 656.01	$ 989.52	$ 264.76	$ 1,254.28	$ 1,146.84	$ 332.19	$ 1,479.03	$ 1,544.96	$ 502.80	$ 2,047.76	$ 3,000	$ 6,000	$ 750	$ 1,500	10%	Y	$30 copay	$150 copay
Cap Metro Cost Sharing	*87%*	*13%*		*79%*	*21%*		*78%*	*22%*		*75%*	*25%*									
DART Open Access Plan	$ 599.95	$ 150.06	$ 750.01	$ 1,114.94	$ 276.66	$ 1,391.60	$ 1,235.94	$ 346.17	$ 1,582.11	$ 1,801.31	$ 478.47	$ 2,279.78	$ 2,750	$ 5,500	$ 1,600	$ 3,200	15% after deductible	Y	$100 copay	15% after deductible
DART Cost Sharing	*80%*	*20%*		*80%*	*20%*		*78%*	*22%*		*79%*	*21%*									
DART Accountable Care Flex Plan	$ 758.12	$ 11.91	$ 770.03	$ 924.04	$ 119.02	$ 1,043.06	$ 1,294.59	$ 176.26	$ 1,470.85	$ 2,425.52	$ 320.71	$ 2,746.23	$ 4,250	$ 8,500	$ 2,250	$ 4,500	30% after deductible	N	$100 copay	30% after deductible
DART Cost Sharing	*98%*	*2%*		*89%*	*11%*		*88%*	*12%*		*88%*	*12%*									
DART Accountable Care Plan	$ 1,084.49	$ 138.10	$ 1,222.59	$ 1,818.87	$ 229.92	$ 2,048.79	$ 2,103.46	$ 281.65	$ 2,385.11	$ 2,994.76	$ 393.08	$ 3,387.84	$ 2,250	$ 4,500	$ 500	$ 1,000	10% after deductible	N	$50 copay	$250 copay
DART Cost Sharing	*89%*	*11%*		*89%*	*11%*		*88%*	*12%*		*88%*	*12%*									
Trinity Metro BCBS Medical / Wellness	$ 476.07	$ 91.20	$ 567.27	$ 1,289.90	$ 360.86	$ 1,650.76	$ 1,268.60	$ 353.80	$ 1,622.40	$ 2,065.38	$ 617.82	$ 2,683.20	$ 8,150	$ 16,300	$ 1,000	$ 3,000	20% after deductible	Y	$40 copay	$300 copay, then 20% after deductible
Trinity Metro Cost Sharing	*84%*	*16%*		*78%*	*22%*		*78%*	*22%*		*77%*	*23%*									
Trinity Metro BCBS Medical / No Wellness	$ 426.07	$ 141.20	$ 567.27	$ 1,239.90	$ 410.86	$ 1,650.76	$ 1,218.60	$ 403.80	$ 1,622.40	$ 2,015.38	$ 667.82	$ 2,683.20	$ 8,150	$ 16,300	$ 1,000	$ 3,000	20% after deductible	Y	$40 copay	$300 copay, then 20% after deductible
Trinity Metro Cost Sharing	*75%*	*25%*		*75%*	*25%*		*75%*	*25%*		*75%*	*25%*									

Benefit Survey Results
7/15/2020

DENTAL

	EE Only Per Month			EE+ Children Per Month			EE+ Spouse Per Month			Family Per Month		
	ER	EE	Total Cost	ER	EE	Total Cost	ER	EE	Total Cost	ER	EE	Total Cost
Denton County Transportation Authority (DCTA) Dental Plan	$ 37.64	$ -	$ 37.64	$ 59.43	$ 21.79	$ 81.22	$ 57.45	$ 19.81	$ 77.26	$ 76.59	$ 38.95	$ 115.54
DCTA Cost Sharing	*100%*	*0%*		*73%*	*27%*		*74%*	*26%*		*66%*	*34%*	
North Texas Mobility Corporation (NTMC) Dental High Plan	$ 19.47	$ -	$ 19.47	$ 32.56	$ 9.72	$ 42.28	$ 29.95	$ 8.46	$ 38.41	$ 46.12	$ 20.74	$ 66.86
NTMC Cost Sharing	*100%*	*0%*		*77%*	*23%*		*78%*	*22%*		*69%*	*31%*	
North Texas Mobility Corporation (NTMC) Dental Low Plan	$ 15.48	$ -	$ 15.48	$ 24.15	$ 7.22	$ 31.37	$ 23.77	$ 6.72	$ 30.49	$ 34.72	$ 15.62	$ 50.34
NTMC Cost Sharing	*100%*	*0%*		*77%*	*23%*		*78%*	*22%*		*69%*	*31%*	
City of Denton Dental HIGH Plan	$ -	$ 51.64	$ 51.64	$ -	$ 100.60	$ 100.60	$ -	$ 98.68	$ 98.68	$ -	$ 150.46	$ 150.46
City of Denton Cost Sharing	*0%*	*100%*					*0%*	*100%*		*0%*	*100%*	
City of Denton Dental LOW Plan	$ -	$ 22.46	$ 22.46	$ -	$ 58.78	$ 58.78	$ -	$ 47.20	$ 47.20	$ -	$ 83.46	$ 83.46
City of Denton Cost Sharing	*0%*	*100%*					*0%*	*100%*		*0%*	*100%*	
City of HV BCBS PPO (Blue Care) Dental	$ 45.20	$ -	$ 45.20	$ 57.24	$ 64.46	$ 121.70	$ 57.24	$ 32.23	$ 89.47	$ 57.24	$ 64.46	$ 121.70
City of HV Cost Sharing	*100%*	*0%*		*47%*	*53%*		*64%*	*36%*		*47%*	*53%*	
City of Lewisville Cigna PPO Dental Plan	$ 25.91	$ 10.00	$ 35.91	$ 9.87	$ 47.00	$ 56.87	$ 6.70	$ 42.00	$ 48.70	$ 11.58	$ 83.00	$ 94.58
City of Lewisville Cost Sharing	*72%*	*28%*		*17%*	*83%*		*14%*	*86%*		*12%*	*88%*	
Cap Metro Dental Plan	$ 35.07	$ -	$ 35.07	$ 84.92	$ 16.62	$ 101.54	$ 84.92	$ 16.62	$ 101.54	$ 84.92	$ 16.62	$ 101.54
Cap Metro Cost Sharing	*100%*	*0%*		*84%*	*16%*		*84%*	*16%*		*84%*	*16%*	
DART Delta Dental	$ 22.33	$ 12.14	$ 34.47	$ 38.52	$ 20.93	$ 59.45	$ 38.61	$ 20.98	$ 59.59	$ 59.56	$ 32.36	$ 91.92
DART Cost Sharing	*65%*	*35%*		*65%*	*35%*		*65%*	*35%*		*65%*	*35%*	
Trinity Metro Metlife Dental (High Plan)	$ -	$ 34.20	$ 34.20	$ -	$ 74.71	$ 74.71	$ -	$ 62.55	$ 62.55	$ -	$ 103.10	$ 103.10
Trinity Metro Cost Sharing	*0%*	*100%*		*0%*	*100%*		*0%*	*100%*		*0%*	*100%*	
Trinity Metro Metlife Dental (Low Plan)	$ -	$ 14.75	$ 14.75	$ -	$ 38.94	$ 38.94	$ -	$ 28.17	$ 28.17	$ -	$ 52.36	$ 52.36
Trinity Metro Cost Sharing	*0%*	*100%*		*0%*	*100%*		*0%*	*100%*		*0%*	*100%*	

Benefit Survey Results
7/15/2020

VISION

	EE Only Per Month			EE+ Children Per Month			EE+ Spouse per Month			Family Per Month		
	ER	EE	Total Cost	ER	EE	Total Cost	ER	EE	Total Cost	ER	EE	Total Cost
Denton County Transportation Authority (DCTA) Vision Plan	$ -	$ 11.37	$ 11.37	$ -	$ 22.74	$ 22.74	$ -	$ 21.60	$ 21.60	$ -	$ 33.42	$ 33.42
DCTA Cost Sharing	*0%*	*100%*		*0%*	*100%*		*0%*	*100%*		*0%*	*100%*	
North Texas Mobility Corporation (NTMC) Vision Plan	$ 10.45	$ -	$ 10.45	$ 15.66	$ 5.22	$ 20.88	$ 15.13	$ 4.70	$ 19.83	$ 20.88	$ 10.44	$ 31.32
NTMC Cost Sharing	*100%*	*0%*		*75%*	*25%*		*76%*	*24%*		*67%*	*33%*	
City of Denton Vision Plan	$ -	$ 5.60	$ 5.60	N/A	N/A	N/A	$ -	$ 8.96	$ 8.96	$ -	$ 14.52	$ 14.52
City of Denton Cost Sharing	*0%*	*100%*					*0%*	*100%*		*0%*	*100%*	
City of HV Vision Service Plan (VSP)	$ 15.92	$ -	$ 15.92	$ 15.92	$ 9.14	$ 25.06	$ 15.92	$ 9.14	$ 25.06	$ 15.92	$ 9.14	$ 25.06
City of HV Cost Sharing	*100%*	*0%*		*64%*	*36%*		*64%*	*36%*		*64%*	*36%*	
City of Lewisville Superior Vision	$ 4.15	$ -	$ 4.15	$ 7.80	$ 3.66	$ 11.46	$ 7.90	$ 3.76	$ 11.66	$ 12.20	$ 8.06	$ 20.26
City of Lewisville Cost Sharing	*100%*	*0%*		*68%*	*32%*		*68%*	*32%*		*60%*	*40%*	
Cap Metro Vision Plan	$ -	$ 8.16	$ 8.16	$ -	$ 12.14	$ 12.14	$ -	$ 12.14	$ 12.14	$ -	$ 21.64	$ 21.64
Cap Metro Cost Sharing	*0%*	*100%*		*0%*	*100%*		*0%*	*100%*		*0%*	*100%*	
DART EyeMed	$ -	$ 5.95	$ 5.95	$ -	$ 14.88	$ 14.88	$ -	$ 11.89	$ 11.89	$ -	$ 16.38	$ 16.38
DART Cost Sharing	*0%*	*100%*		*0%*	*100%*		*0%*	*100%*		*0%*	*100%*	
Trinity Metro Vision- Davis	$ -	$ 5.28	$ 5.28	$ -	$ 10.05	$ 10.05	$ -	$ 9.51	$ 9.51	$ -	$ 15.86	$ 15.86
Trinity Metro Cost Sharing	*0%*	*100%*		*0%*	*100%*		*0%*	*100%*		*0%*	*100%*	

DENTON COUNTY TRANSPORTATION AUTHORITY
FY21 Proposed Budget
Long Range Financial Plan

	Adopted FY2020	Revised FY2020	Proposed FY2021	Proposed FY2022	Proposed FY2023	Proposed FY2024	Proposed FY2025	Proposed FY2026	Proposed FY2027	Proposed FY2028	Proposed FY2029	Proposed FY2030	Proposed FY2031	Proposed FY2032	Proposed FY2033	Proposed FY2034	Proposed FY2035	Proposed FY2036	FY2020-FY2036
Beginning Fund Balance:	*$ 34,263,794*	*$ 34,263,794*	*$ 35,419,716*	*$ 45,656,427*	*$ 52,279,282*	*$ 53,828,671*	*$ 55,350,312*	*$ 56,504,157*	*$ 57,214,921*	*$ 58,096,199*	*$ 57,890,912*	*$ 56,994,978*	*$ 55,184,420*	*$ 53,370,870*	*$ 49,837,986*	*$ 47,145,625*	*$ 41,261,247*	*$ 34,434,803*	*$ 34,263,794*
OPERATING REVENUES																			
Bus Operating Revenue	5,040,209	4,786,751	3,803,411	4,243,412	5,158,773	5,313,080	5,447,676	5,595,455	5,763,755	5,922,262	5,952,131	6,008,325	6,040,341	6,070,656	6,130,383	6,162,549	6,196,002	6,302,815	94,897,776
Rail Operating Revenue	588,272	421,578	248,579	470,620	588,275	617,689	623,866	630,105	661,610	668,226	674,908	708,654	715,740	722,898	759,042	766,633	774,299	813,014	10,865,736
Misc. Revenue	52,000	52,000	-	-	-	-	-	-	-	-	-	-	-	-	-	-	-	-	52,000
NON-OPERATING REVENUES																			
Sales Tax Revenue	29,019,184	21,464,452	26,624,124	29,019,184	30,179,951	31,387,149	32,328,764	33,298,627	33,964,599	34,643,891	35,336,769	36,043,505	36,764,375	37,499,662	38,249,655	39,014,648	39,794,941	40,590,840	576,205,138
Operating Grants	5,253,753	12,400,872	16,506,873	12,039,172	6,509,093	6,089,651	6,005,892	5,918,380	6,889,017	6,666,761	7,199,034	5,735,320	7,345,990	5,303,963	7,082,434	5,780,764	5,842,224	5,108,706	128,424,146
Investment Income	400,000	325,000	100,000	92,647	104,989	108,634	111,551	169,845	170,263	171,703	170,037	166,916	214,231	207,426	193,162	183,768	161,551	170,455	2,822,177
TOTAL REVENUES	**40,353,418**	**39,450,653**	**47,282,987**	**45,865,035**	**42,541,082**	**43,516,203**	**44,517,749**	**45,612,412**	**47,449,244**	**48,072,843**	**49,332,879**	**48,662,719**	**51,080,676**	**49,804,604**	**52,414,676**	**51,908,363**	**52,769,017**	**52,985,830**	**813,266,972**
OPERATING EXPENSES																			
Bus Operating Expense	14,183,370	13,175,861	11,731,716	13,568,339	15,576,888	16,249,600	16,708,947	17,446,928	18,426,176	19,370,428	20,186,923	21,293,715	22,098,707	23,137,147	24,269,573	25,273,440	26,755,651	27,981,493	333,251,532
Rail Operating Expense	13,672,857	12,990,036	13,153,234	13,990,449	14,380,715	14,790,192	15,202,781	15,642,210	16,082,727	16,547,147	17,020,382	17,513,653	18,017,290	18,531,803	19,070,527	19,617,715	20,182,930	20,766,792	283,500,582
G&A Operating Expense	6,320,872	6,662,641	6,170,529	5,934,899	6,129,938	6,334,718	6,549,944	6,776,386	7,014,881	7,266,339	7,531,754	7,812,208	8,108,881	8,423,061	8,756,153	9,109,689	9,485,346	9,884,953	127,952,319
TOTAL EXPENSES	**34,177,099**	**32,828,538**	**31,055,479**	**33,493,686**	**36,087,542**	**37,374,510**	**38,461,671**	**39,865,523**	**41,523,784**	**43,183,913**	**44,739,059**	**46,619,576**	**48,224,878**	**50,092,010**	**52,096,253**	**54,000,845**	**56,423,927**	**58,633,238**	**744,704,433**
NET INCOME	6,176,319	6,622,115	16,227,508	12,371,349	6,453,540	6,141,693	6,056,078	5,746,888	5,925,460	4,888,930	4,593,820	2,043,143	2,855,798	(287,406)	318,423	(2,092,482)	(3,654,910)	(5,647,407)	68,562,539
CAPITAL OUTLAY & MAJOR MAINTENANCE																			
Bus Capital	-	8,237	-	-	-	-	-	-	-	-	-	-	-	-	-	-	-	-	8,237
Bus Fleet Replacement	2,543,600	10,000	2,932,700	1,124,247	1,650,648	2,082,427	2,168,650	2,258,736	1,259,551	1,488,344	940,415	2,447,180	789,136	2,891,223	1,060,444	2,400,399	2,337,131	3,092,223	30,933,455
Professional Services / Technology Improvements	1,004,472	126,648	300,000	300,000	-	350,000	80,000	-	-	-	350,000	80,000	-	-	-	350,000	80,000	-	2,016,648
Transit Safety Improvements	324,157	324,657	-	-	-	-	-	-	-	-	-	-	-	-	-	-	-	-	324,657
Hike & Bike Trails	923,427	630,144	-	-	-	-	-	-	-	-	-	-	-	-	-	-	-	-	630,144
Major Maintenance Items - Rail	2,024,826	2,024,826	2,124,693	2,062,535	1,798,907	1,099,619	1,704,328	1,900,386	1,920,337	1,945,982	1,983,282	2,274,599	3,193,772	2,962,871	2,780,487	3,173,312	2,824,759	2,639,918	38,414,613
Major Maintenance Items - Bus	125,000	125,000	-	179,530	238,264	273,851	200,000	200,000	200,000	200,000	200,000	200,000	200,000	200,000	200,000	200,000	200,000	200,000	3,216,645
Positive Train Control	3,062,913	713,645	3,887,931	1,850,000	-	-	-	-	-	-	-	-	-	-	-	-	-	-	6,451,576
Infrastructure Acquisition	202,568	157,992	-	-	-	-	-	-	-	-	-	-	-	-	-	-	-	-	157,992
Infrastructure Acquisition - Old Town	-	2,323,890	-	-	528,100	-	-	-	-	-	-	-	-	-	-	-	-	-	2,851,990
Brownfield Remediation	71,210	30,000	43,752	-	-	-	-	-	-	-	-	-	-	-	-	-	-	-	73,752
TOTAL CAPITAL OUTLAY & MAJOR MAINTENANCE	**10,282,173**	**6,475,039**	**9,289,076**	**5,516,312**	**4,215,919**	**3,805,897**	**4,152,978**	**4,359,122**	**3,379,888**	**3,634,326**	**3,473,697**	**5,001,779**	**4,182,908**	**6,054,094**	**4,040,931**	**6,123,711**	**5,441,890**	**5,932,141**	**85,079,709**
CAPITAL SOURCES																			
Capital Grants	5,753,410	1,464,435	6,094,359	2,572,126	1,603,487	2,022,929	2,106,688	2,194,200	1,223,563	1,445,819	913,546	2,377,260	766,590	2,808,617	1,030,146	2,331,816	2,270,356	3,003,874	36,229,811
Capital Grants - Old Town	-	2,323,890	-	-	528,100	-	-	-	-	-	-	-	-	-	-	-	-	-	2,851,990
TOTAL CAPITAL SOURCES	**5,753,410**	**3,788,325**	**6,094,359**	**2,572,126**	**2,131,587**	**2,022,929**	**2,106,688**	**2,194,200**	**1,223,563**	**1,445,819**	**913,546**	**2,377,260**	**766,590**	**2,808,617**	**1,030,146**	**2,331,816**	**2,270,356**	**3,003,874**	**39,081,801**
DEBT SERVICE																			
2009 Refunding (Sales Tax) Debt Service	1,715,240	1,715,240	1,714,040	1,715,845	1,715,771	1,713,701	1,714,637	1,713,378	1,714,924	1,714,077	1,715,835	-	-	-	-	-	-	-	17,147,448
2011 Contractual Obligations	1,064,240	1,064,240	1,082,040	1,088,462	1,104,048	1,123,382	1,141,307	1,157,824	1,172,933	1,191,633	1,213,768	1,229,182	1,253,030	-	-	-	-	-	13,821,849
TOTAL DEBT SERVICE	**2,779,480**	**2,779,480**	**2,796,080**	**2,804,307**	**2,819,819**	**2,837,083**	**2,855,944**	**2,871,202**	**2,887,857**	**2,905,710**	**2,929,603**	**1,229,182**	**1,253,030**	**-**	**-**	**-**	**-**	**-**	**30,969,297**
Internal Debt Service Coverage:	2.22	2.38	5.80	4.41	2.29	2.16	2.12	2.00	2.05	1.68	1.57	1.66	2.28	N/A	N/A	N/A	N/A	N/A	
Outstanding Bond Principal as of September 30th	*23,360,000*	23,360,000	*21,405,000*	*19,370,000*	*17,245,000*	*15,025,000*	*12,705,000*	*10,285,000*	*7,760,000*	*5,125,000*	*2,370,000*	*1,215,000*	-	-	-	-	-	-	
ENDING FUND BALANCE	33,131,870	35,419,716	45,656,427	52,279,282	53,828,671	55,350,312	56,504,157	57,214,921	58,096,199	57,890,912	56,994,978	55,184,420	53,370,870	49,837,986	47,145,625	41,261,247	34,434,803	25,859,128	25,859,128
Less Required Fund Balance (O&M Reserve Policy)	*8,544,275*	8,207,134	*7,763,870*	*8,373,422*	*9,021,885*	*9,343,627*	*9,615,418*	*9,966,381*	*10,380,946*	*10,795,978*	*11,184,765*	*11,654,894*	*12,056,220*	*12,523,003*	*13,024,063*	*13,500,211*	*14,105,982*	*14,658,309*	
Less Sales Tax Stabilization Fund	*870,576*	643,934	*798,724*	*870,576*	*905,399*	*941,614*	*969,863*	*998,959*	*1,018,938*	*1,039,317*	*1,060,103*	*1,081,305*	*1,102,931*	*1,124,990*	*1,147,490*	*1,170,439*	*1,193,848*	*1,217,725*	
Less Fuel Stabilization Fund	*450,000*	450,000	*300,000*	*300,000*	*300,000*	*300,000*	*300,000*	*300,000*	*300,000*	*300,000*	*300,000*	*300,000*	*300,000*	*300,000*	*300,000*	*300,000*	*300,000*	*300,000*	
Less Capital/Infrastructure Fund	*7,500,000*	*4,000,000*	*4,000,000*	*4,000,000*	*4,000,000*	*4,000,000*	*4,000,000*	*4,000,000*	*4,000,000*	*4,000,000*	*4,000,000*	*4,000,000*	*4,000,000*	*4,000,000*	*4,000,000*	*4,000,000*	*4,000,000*	*4,000,000*	
NET AVAILABLE FUND BALANCE	**$ 16,027,913**	**$ 22,118,648**	**$ 32,793,833**	**$ 38,735,285**	**$ 39,601,387**	**$ 40,765,071**	**$ 41,618,876**	**$ 41,949,581**	**$ 42,396,315**	**$ 41,755,617**	**$ 40,450,110**	**$ 38,148,221**	**$ 35,911,719**	**$ 31,889,994**	**$ 28,674,072**	**$ 22,290,596**	**$ 14,834,973**	**$ 5,683,094**	

DENTON COUNTY TRANSPORTATION AUTHORITY
FY21 Proposed Budget
Long Range Financial Plan

CURRENT VERSION 7/23/2020	Adopted FY2020	Revised FY2020	Proposed FY2021	Proposed FY2022	Proposed FY2023	Proposed FY2024	Proposed FY2025	Proposed FY2026	Proposed FY2027	Proposed FY2028	Proposed FY2029	Proposed FY2030	Proposed FY2031	Proposed FY2032	Proposed FY2033	Proposed FY2034	Proposed FY2035	Proposed FY2036
Internal Debt Service Coverage:	2.22	2.38	5.80	4.41	2.29	2.16	2.12	2.00	2.05	1.68	1.57	1.66	2.28	N/A	N/A	N/A	N/A	N/A
Outstanding Bond Principal as of September 30th	*23,360,000*	23,360,000	*21,405,000*	*19,370,000*	*17,245,000*	*15,025,000*	*12,705,000*	*10,285,000*	*7,760,000*	*5,125,000*	*2,370,000*	*1,215,000*	-	-	-	-	-	-
ENDING FUND BALANCE	33,131,870	35,419,716	45,656,427	52,279,282	53,828,671	55,350,312	56,504,157	57,214,921	58,096,199	57,890,912	56,994,978	55,184,420	53,370,870	49,837,986	47,145,625	41,261,247	34,434,803	25,859,128
Less Required Fund Balance (O&M Reserve Policy)	*8,544,275*	8,207,134	*7,763,870*	*8,373,422*	*9,021,885*	*9,343,627*	*9,615,418*	*9,966,381*	*10,380,946*	*10,795,978*	*11,184,765*	*11,654,894*	*12,056,220*	*12,523,003*	*13,024,063*	*13,500,211*	*14,105,982*	*14,658,309*
Less Sales Tax Stabilization Fund	*870,576*	643,934	*798,724*	*870,576*	*905,399*	*941,614*	*969,863*	*998,959*	*1,018,938*	*1,039,317*	*1,060,103*	*1,081,305*	*1,102,931*	*1,124,990*	*1,147,490*	*1,170,439*	*1,193,848*	*1,217,725*
Less Fuel Stabilization Fund	*450,000*	450,000	*300,000*	*300,000*	*300,000*	*300,000*	*300,000*	*300,000*	*300,000*	*300,000*	*300,000*	*300,000*	*300,000*	*300,000*	*300,000*	*300,000*	*300,000*	*300,000*
Less Capital/Infrastructure Fund	*7,500,000*	*4,000,000*	*4,000,000*	*4,000,000*	*4,000,000*	*4,000,000*	*4,000,000*	*4,000,000*	*4,000,000*	*4,000,000*	*4,000,000*	*4,000,000*	*4,000,000*	*4,000,000*	*4,000,000*	*4,000,000*	*4,000,000*	*4,000,000*
NET AVAILABLE FUND BALANCE	**$ 16,027,913**	**$ 22,118,648**	**$ 32,793,833**	**$ 38,735,285**	**$ 39,601,387**	**$ 40,765,071**	**$ 41,618,876**	**$ 41,949,581**	**$ 42,396,315**	**$ 41,755,617**	**$ 40,450,110**	**$ 38,148,221**	**$ 35,911,719**	**$ 31,889,994**	**$ 28,674,072**	**$ 22,290,596**	**$ 14,834,973**	**$ 5,683,094**

PRESENTED AT JUNE BUDGET WORKSHOP	Adopted FY2020	Revised FY2020	Proposed FY2021	Proposed FY2022	Proposed FY2023	Proposed FY2024	Proposed FY2025	Proposed FY2026	Proposed FY2027	Proposed FY2028	Proposed FY2029	Proposed FY2030	Proposed FY2031	Proposed FY2032	Proposed FY2033	Proposed FY2034	Proposed FY2035	Proposed FY2036
Internal Debt Service Coverage:	2.22	2.62	5.80	4.31	2.47	2.25	2.12	1.91	1.98	1.64	1.56	1.73	2.46	N/A	N/A	N/A	N/A	N/A
Outstanding Bond Principal as of September 30th	*23,360,000*	23,360,000	*21,405,000*	*19,370,000*	*17,245,000*	*15,025,000*	*12,705,000*	*10,285,000*	*7,760,000*	*5,125,000*	*2,370,000*	*1,215,000*	-	-	-	-	-	-
ENDING FUND BALANCE	33,131,870	36,086,716	46,323,427	52,494,528	54,316,804	55,775,572	56,614,921	56,754,222	57,234,344	56,678,955	55,638,767	53,557,688	51,856,525	48,290,386	45,942,066	40,387,686	34,090,975	26,071,594
Less Required Fund Balance (O&M Reserve Policy)	*8,544,275*	8,040,384	*7,763,870*	*8,039,838*	*8,309,604*	*8,597,534*	*8,834,815*	*9,147,707*	*9,523,594*	*9,896,568*	*10,241,596*	*10,664,843*	*11,017,181*	*11,432,683*	*11,878,457*	*12,297,009*	*12,841,574*	*13,328,824*
Less Sales Tax Stabilization Fund	*870,576*	643,934	*798,724*	*838,660*	*880,593*	*907,011*	*925,151*	*943,654*	*962,527*	*981,778*	*1,001,413*	*1,021,441*	*1,041,870*	*1,062,708*	*1,083,962*	*1,105,641*	*1,127,754*	*1,150,309*
Less Fuel Stabilization Fund	*450,000*	450,000	*300,000*	*300,000*	*300,000*	*300,000*	*300,000*	*300,000*	*300,000*	*300,000*	*300,000*	*300,000*	*300,000*	*300,000*	*300,000*	*300,000*	*300,000*	*300,000*
Less Capital/Infrastructure Fund	*7,500,000*	7,500,000	*7,500,000*	*7,500,000*	*7,500,000*	*7,500,000*	*7,500,000*	*7,500,000*	*7,500,000*	*7,500,000*	*7,500,000*	*7,500,000*	*7,500,000*	*7,500,000*	*7,500,000*	*7,500,000*	*7,500,000*	*7,500,000*
NET AVAILABLE FUND BALANCE	**$ 16,027,913**	**$ 19,452,398**	**$ 29,960,833**	**$ 35,816,030**	**$ 37,326,607**	**$ 38,471,027**	**$ 39,054,955**	**$ 38,862,861**	**$ 38,948,223**	**$ 38,000,610**	**$ 36,595,757**	**$ 34,071,403**	**$ 31,997,474**	**$ 27,994,995**	**$ 25,179,648**	**$ 19,185,036**	**$ 12,321,647**	**$ 3,792,461**

ADJUSTMENTS MADE TO LONG RANGE FINANCIAL PLAN

REVENUES

INCREASES IN RIDERSHIP: Back to pre-COVID levels by FY23
PASSENGER FARES: Increases every 3 years
SALES TAX REVENUES: Made whole in FY22 & updated growth assumptions in out-years

OPERATING EXPENSES

BUS OPERATIONS: Assumes 80% pre-COVID service levels in FY22 & 100% pre-COVID service levels in FY23
RAIL OPERATIONS: Assumes pre-COVID service levels with 30 minute headways in FY22
G&A OPERATING: Addition of $667k for Transformation Initiative

CAPITAL

CAPITAL PROJECTS: Addition of Old Town Land Acquisition
Reduced Fleet Replacement Plan based on shift to smaller vehicles & more efficient service assumptions
CAPITAL SOURCES: Addition of FY18 Congestion Mitigation & Air Quality (CMAQ) funds for Old Town Land Acquisition

RESERVE FUND: Reduction of Capital/Infrastructure Fund

Board of Directors Memo

July 23, 2020

SUBJECT: **Transportation Reinvestment Policy (TRiP) Development**

Background

Staff and AECOM will provide an overview of the Transit Reinvestment Program (TRiP) and how it may be implemented in the future by DCTA. TRiP will enable partnerships between the agency and its member cities on mutually beneficial infrastructure investments in transit-supportive projects. Recommendations from this study will inform development of a new policy and implementation plan for future Board consideration.

The initial work of this study includes an evaluation of the previous DCTA Enhanced Local Assistance Program (ELAP) and a review of similar programs from transit agencies around the country including DART and Capital Metro in Texas. Recommendations from the study will help develop a policy and implementation process for TRiP as well as assist in identifying ways to leverage resources for future projects.

The recommended program includes an annual call for projects with project consideration and approval by the DCTA Board. DCTA and member cities would then enter into an Interlocal Agreement for the execution of approved projects. DCTA will monitor and report project progress to the Board on a regular basis.

Exhibits

Exhibit 1 – Transportation Reinvestment Policy DCTA Board Presentation

Submitted By: _____
Tim Palermo, Planning & Data Analytics Manager

Final Review: _____
Kristina Holcomb, Deputy CEO

Approval: _____
Raymond Suarez, CEO

Transportation Reinvestment Program (TRiP)

Denton County Transportation Authority

Board of Directors

July 23, 2020

Why TRiP?

- Transportation Reinvestment Program (TRiP)
- COVID-19 impacts
  - Service levels
  - Impacts to city general funds
- Creative solutions to fulfilling mission of “improving mobility, air quality, economic development and livability in the areas we serve”
- Build and improve upon legacy ELAP program

ELAP Program

- Timeline: 2003 to 2008 (Prior to A-train)
- Purpose:
  - Financial assistance for local transportation projects in DCTA member cities: Denton, Highland Village and Lewisville.
- Amount:
  - Not to exceed 25% of a city's half-cent sales tax apportionment
- Criteria:
  - Projects consistent with and beneficial to DCTA's enabling legislation
  - Example projects included: Transit-related street improvements (on existing or planned bus routes) and transit-supportive projects and programs (such as P&R, stop and station amenities, ADA compliance and rail crossing improvements)
- Process:
  - Cities submitted projects for Board Approval
  - Amounts programmed in advance.

Legal Requirements

DCTA's TRiP Program will comply with:

- Texas Transportation Code
  - Chapter 460: Coordinated County Transportation Authorities
  - Chapter 431: Texas Transportation Corporation Act
- Local Government Code
  - Chapter 791: Interlocal Cooperation Contracts
  - Chapter 171: Regulation of Conflicts of Interest
- Sales tax ballot language
- Bondholder agreements



"Consistent with and beneficial to the service plan"

Long Range Service Plan

2003 LRSP Goals:

- Improve transportation for the County and region
- Maintain and improve Denton County's quality of life
- Contribute to air quality improvement
- Promote economic development

2003 LRSP includes ELAP program to finance short-term mobility improvements prior to rail system operation "for up to a maximum of four years"



AECOM

Long Range Service Plan

2012 LRSP Goals:

- Increase efficiency and reliability
- Increase service effectiveness for DCTA Customers
- Increase the visibility and elevate the image of DCTA
- Expand DCTA services into areas where transit has a strong likelihood of success
- Coordinate with regional transportation providers
- Pair transit facilities to existing and planned transit-supportive development.
- Advocate sustainable development practices that support transit
- Strive for financial excellence by maintaining fiscally sound and sustainable financial plans and budgets that reflect community priorities and values

Review Of Member Cities' Community Development Goals

- Housing Diversity
- Transit-oriented and transit-adjacent development
- Mixed-use development around transit stations and in higher-density areas
- Reduced sprawl -- compact development
- High-quality infill development
- Multimodal transit options
- Improved connections to existing transit
- Complete streets
- Walkable communities
- Parks, open space, recreational opportunities
- Bike/pedestrian infrastructure
- Community "gateways"
- Historic character and local identity



AECOM

Peer Review of Member City Reinvestment Programs

Flexible Programs

- **NJ Transit:** Transit Village Grant Program
- **San Francisco Muni:** Transportation Effectiveness Program (TEP)
- **DART:** Street Repair Policy
- **DART:** Local Assistance Program/Congestion Management System Policy(LAP/CMS)/Transit Related Improvement Policy(TRIP)
- **Capital Metro:** Bus Stop/Sidewalk Program



Fixed Programs

- **LA Metro:** Transit Development Program – Local Return
- **Houston METRO:** General Mobility Program



AECOM

Peer Review of Member City Investment Programs

Flexible Programs

- **NJ Transit:** Transit Village Grant Program
- **San Francisco Muni:** Transportation Effectiveness Program (TEP)
- **DART:** Street Repair Policy
- **DART:** Local Assistance Program/Congestion Management System Policy(LAP/CMS)/Transit Related Improvement Policy(TRIP)
- **Capital Metro:** Bus Stop/Sidewalk Program

Fixed Programs

- **LA Metro:** Transit Development Program – Local Return
- **Houston METRO:** General Mobility Program





AECOM

DART Programs

- **DART Street Repair Policy**
  - Street and sidewalk repairs for member cities with fixed route bus service through Inter-Local Agreements (ILA)

- **Local Assistance Program/Congestion Management System Policy (LAP/CMS) and Non-Rail City Transit Related Improvement Policy (TRIP)**
  - Provide mobility benefits through financial assistance to DART member cities without rail service through ILAs
  - Projects
    - Transit related street improvements
    - Transit supported projects





DART Street Repair Policy

Goal:

- Allocating funds to member cities for street and sidewalk repairs that directly benefit the DART system (established in 1997)

Process:

- Annual Call for Projects by DART to all cities in the 3rd quarter of fiscal year
- Each city will be required to submit projects on roadways with fixed-route bus service
- Selected projects are included in annual capital program budget for Board consideration

Mechanism:

- 5-year ILA between DART and each city

DART Street Repair Policy

Cost Allocation:

- Value of improvements are based on each city's percentage of fixed route bus service miles

Selection:

- Highest ridership routes in the city

Exceptions:

- Trails
- Transportation System Management (TSM) type projects such as ITS and traffic engineering

Mechanism:

- 5-year ILA between DART and each city

DART Street Repair Policy – Addison: Belt Line Corridor



Goal: Street repair improvements and beautification project that included completing sidewalk gaps and adding shelters at select DART stops along the corridor. Includes adding new seating, accessible paving and trash cans at the bus stops.

Funding: $442,000 was allotted for repairs for sidewalk gaps/additional shelters

AECOM

DART Street Repair Policy - Carrollton



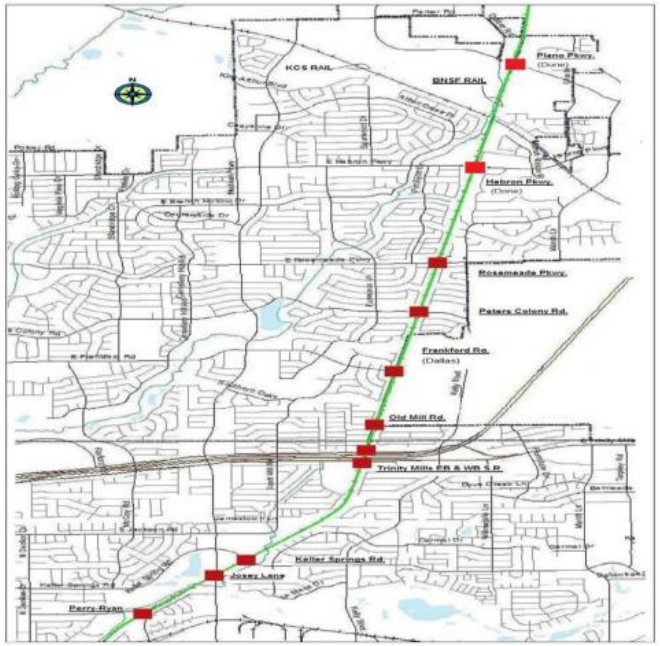

Goal: Implement 11 Quiet Zones that include automatic gates with bells, wayside flashers, special medians, constant warning devices at street crossings, and repaving of streets approaching the rail crossings including sidewalks and ADA ramps. Project is between Josey Lane and Carrollton's northern border.

Process: Carrollton responsible for procurement, construction, and any future changes to the plans necessary to complete project.

Funding: Total cost of $1.4 million, the project reimbursement by DART was $449,455.

AECOM

DART Local Assistance Program/CMS/TRIP

Objective:

- Provide benefits to cities that do not have the positive economic benefit which normally occurs surrounding rail stations.

Funding Allocation:

- Maximum amount of annual DART funding for any municipal projects shall not exceed 21% of the annual projected sales tax revenue from the city

Eligibility:

- Project consistent with Chapter 452 of the Texas Transportation Code
- Projects evaluated on amount of funding required for the project compared to the tax revenue provided by the city.

Projects:

- Enhance transportation modes by DART
- Planning, EIS, engineering, ROW acquisition, construction, O&M costs

Capital Metro Sidewalk and Bus Stop Program

Goal: Agreement between City of Austin Public Works and Capital Metro to coordinate construction of sidewalk and pedestrian improvements at bus stops, bus stop accessibility. $10 million set paid by Capital Metro to fund improvements at existing and new bus stop locations.







AECOM

Capital Metro Sidewalk and Bus Stop Program

- **Staffing**
  - Part time work for the Capital Projects Manager at Cap Metro
  - Coordination with City and project oversight
  - Leverage City staff for engineering and construction
  - Presents updates twice a year to Committee and Board

- **Contract:**
  - ILA between Cap Metro and the City of Austin's Public Works
  - IDIQ contract (on-call services program)
    - Allows flexibility and quick process for construction
  - Contracted construction crew through City

- **Project Selection:**
  - Projects prioritized by number of boardings per stop, ROW access and constructability of site

Capital Metro Sidewalk and Bus Stop Program

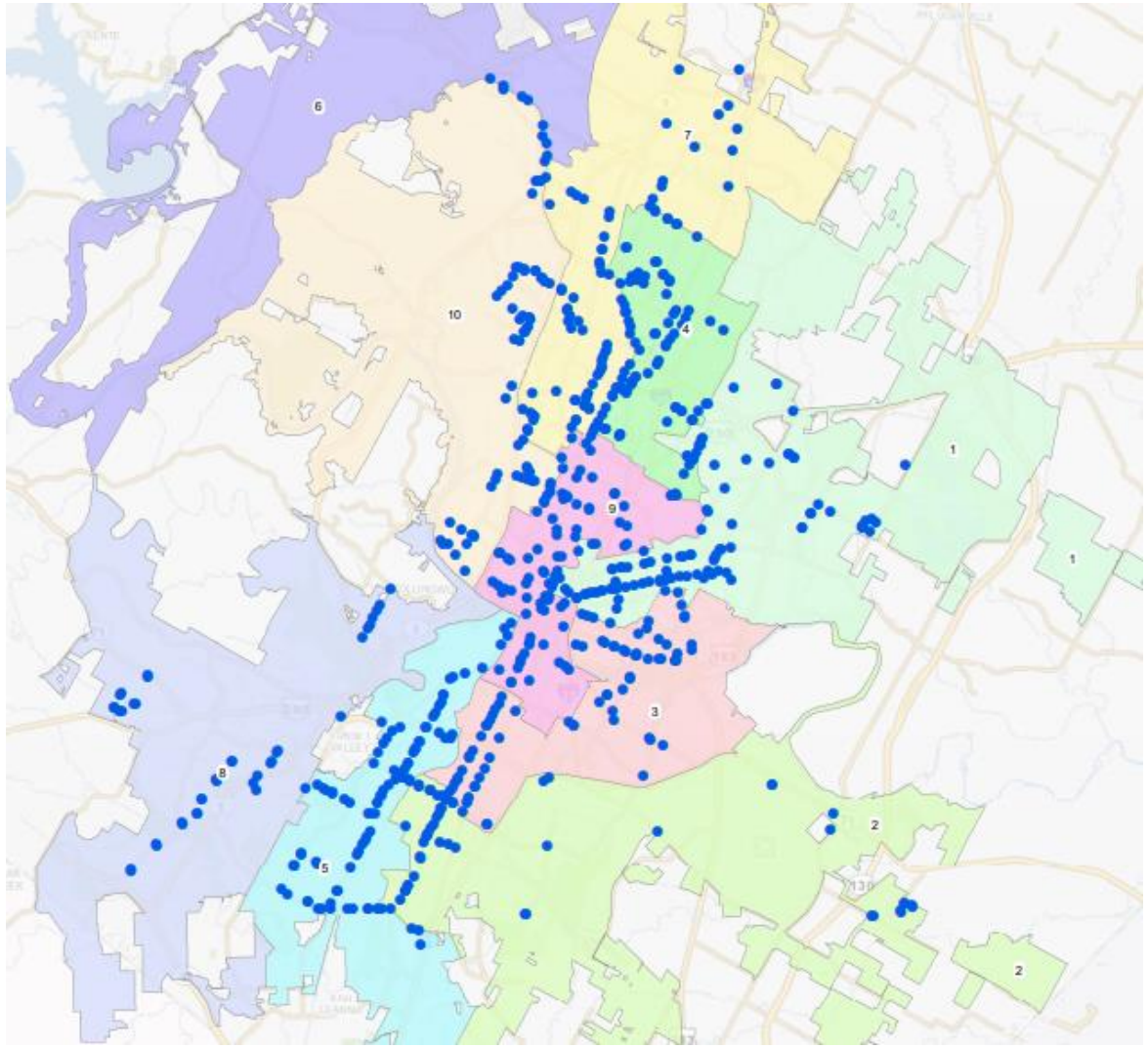

Benefits: Since 2012, Public Works has used this funding to improve sidewalk and pedestrian connectivity at more than 800 Capital Metro bus stops around Austin

"These partnerships help us provide the sidewalk connections that we need, making it easier for people to use our transit system every day."

- Ann Kitchen, Capital Metro Board Member and Austin City Council Member

Which projects are eligible?

Improvement Type	SF Muni	NJ Transit	DART	CapMetro	Atlanta MARTA	Houston Metro	Previous ELAP
Transit Stop Amenities		X	X				X
Sidewalks	X		X	X	X		X
Crosswalks	X		X	X	X		X
Bike/Ped Trail Connections		X	X		X	X	
Median island	X		X			X	
Bus Bulb-out	X		X	X	X	X	X
Turning Pocket	X		X	X	X	X	X
Transit Lane	X		X	X	X	X	X
Bike Lane	X	X	X	X		X	
Other Lane reconfiguration	X		X	X		X	X
Traffic Calming	X	X	X	X	X	X	X
Landscaping/streetscaping							
Street lighting		X	X		X	X	X
Other public safety improvements		X					X
TSP		X	X	X	X	X	X
Signal Timing		X	X	X	X	X	X
Other Intersection improvements	X	X	X	X	X	X	X
Shared Parking			X				X
Kiss & Ride / Drop-off Zones			X				X
Transit Oriented Development			X		X		
Transit Adjacent Development/Value Capture			X		X		
Civic Space							
Catalyst Investment							
Active Urban Space							
Wayfinding/Placemaking signage		X	X		X		

AECOM

Funding Implications

Improvement Type	5307	5308	5310	5337	BUILD Grant	TOD pilot	TIFIA	Sales Tax	NCTGOG Strategic Partnerships	NCTCOG Transportation Alternatives	TDCs	NCTCOG Sustainable Development	TX OED
Transit Stop Amenities	X			R	X		R	X	X				
Sidewalks	R		R		X		R	R	R	X	X		
Crosswalks	R		R		X		R	R	X	X	X		
Bike/Ped Trail Connections	R		R		X		R	R	R	X	X		
Median island	R		R		X		R	R	X	X	X		
Bus Bulb Out	X				X			X	X		X		
Turning Pocket	X				X			X	X		X		
Transit Lane	X				X			X	X	R	X		
Bike Lane	R				X		R	R		X	X		
Other Lane reconfiguration					X			R			X		
Traffic Calming					X			R		X	X		
Landscaping/streetscaping	R				X			X					
Street lighting	R		R		X			X	R		X		
Other public safety improvements					X			R					
TSP				R	X		X	X			X		
Signal Timing					X		R	X			X		
Other Intersection improvements					X		R	X		R	X		
Shared Parking	R	R			X			R					
Kiss & Ride/Drop-off Zones	X				X			R	X				
Transit Oriented Development	R					R	R	X			R	X	X
Transit Adjacent Dev./Value Capture	R					R		X				X	X
Civic Space	R	R				R		X				X	X
Catalyst Investment		R				R		X				X	X
Active Urban Space						R		X				X	X
Wayfinding/Placemaking signage			R			R		X	R	X			

AECOM

TRiP Program Organization

Hybrid Approach

Diverted Funding

1. Percentage of sales tax receipts directed to cities
2. Cities document eligible expenses
3. Reimbursement of unused revenue/ ineligible expenses

- ⊘ May require voter approval
- ⊘ Restrictions on federal and leveraged funds
- ⊘ Limits system expansion

Comprehensive Plan

1. DCTA & Cities identify transit-supportive projects and costs (TSP process)
2. DCTA funds and cities manage projects through IDIQ Interlocal Agreement
3. Quarterly/Bi-Annual-staff coordination meetings

- ✓ City-led engineering
- ✓ Strategic use of federal revenues
- ✓ Fosters collaborative planning effort

Annual Call

1. DCTA call for projects
2. Cities submit individual projects and cost estimates
3. DCTA-led approval and award process

- ✓ Member-city driven
- ✓ Annual call can reflect changing needs/goals
- ⊘ Requires sunset or may limit system expansion

AECOM

Recommended Approach

Year 1 Call for Projects

- Projects that support established 2012 Service Plan goals
- Cities may submit short-term and aspirational projects

DCTA Approval and Award Process

- Board approval process for short-term projects
- Year 1 funds committed to member cities

Tracking and Auditing

- Board approval process for cities to submit expenses
- Unused funds returned to DCTA

Long Range Service Plan Process

- Verify or Update Long Range Service Goals
- Aspirational Projects and DCTA-City collaboration to identify long range transit-supportive capital needs

DCTA-Member City ILA(s)

- Specifies responsibilities
- Funding Commitment
- One-time Board approval

Tracking and Auditing

- Cities can execute multiple projects under IDIQ
- Quarterly/Bi-Annual DCTA and City Staff Collaboration

ILA(s) extended or modified as needed

Unused funds can be recommitted

Recommended Approach

- Initial funding based on cash reserves
  - Total distributions to each city not to exceed an amount proportional to sales tax revenues.
- Call for projects
  - All projects must be related to and benefit DCTA service
- Types of projects could include:
  - Roadway repairs
  - Sidewalks and trails
  - Bus stop or station amenities
  - Intersection improvements
  - **Matching funds for federal/state programs**

- DCTA Board approval
- ILA between DCTA and Cities
- Ongoing project updates to DCTA Board

Thank you

Board of Directors Memo

July 23, 2020

SUBJECT: COVID Pay Overview

Background

Denton County issued a Stay at Home order on March 24, 2020 in response to the COVID-19 pandemic. In April 2020, the Amalgamated Transit Union, which represents NTMC bus operators, sent a nationwide letter requesting additional compensation for operators while working during the COVID-19 pandemic. On May 27, 2020 and June 24, 2020, DCTA staff discussed options and cost implications with the DCTA Board of Directors to recognize NTMC Bus Operators for their dedication of service and commitment to safety.

Financial Impact

Below are options with associated costs related to operator hours worked between March 22, 2020 and May 30, 2020 (pay dates 4/10/2020-6/5/2020) which is a ten-week period aligning with Denton County's Stay at Home order and Phases I and II of reopening the state. DCTA staff is recommending Option 3, highlighted in gray.

Option		Cost (A)	Notes
1	Maintain existing pay rates	$ 0	
2	$500 one-time	$45,900	Based on 85 operators who worked at some point during specified time period
3	$150/week	$125,388	$150/week for each week with hours worked
4	15% premium on top of existing pay	$67,750	15% of all regular + OT wages paid to operators during period
5	50% premium on top of existing pay (ATU Request)	$225,834	50% of all regular + OT wages paid to operators during period
6	$2/hr increase	$50,090	Based on roughly 23,000 hours worked by operators during period

(A) Includes cost of wages plus associated employer taxes

If funding is approved by DCTA's Board, information will be presented to the NTMC Board for consideration and approval. If the proposed operator COVID pay is approved by the NTMC Board, a budget amendment will be presented to both the DCTA Board and NTMC Board to increase DCTA's funding to the NTMC budget.

Recommendation

Staff recommends the DCTA Board approve use of funds in the amount not to exceed $130,000 to provide additional compensation to NTMC bus operators for the period of March 22, 2020 through May 30, 2020.

Exhibits

Exhibit 1: COVID Pay Option Cost Estimate Calculations

Submitted By: Raymond Suarez, CEO

COVID Pay Option Cost Estimate Calculations

Pay Period Dates Worked	4/10/2020 3/22/20 - 4/4/20	4/24/2020 4/5/20 - 4/18/20	5/8/2020 4/19/20 - 5/2/20	5/22/2020 5/3/20 - 5/16/20	6/5/2020 5/17/20 - 5/30/20	Total Cost 4/10/2020 - 6/5/2020 3/22/20 - 5/30/20
# Operators	92	89	90	87	87	96
# Operators with Hours Worked	82	78	77	75	75	85
Hours Worked (Regular + OT)	4,863	4,776	4,908	4,547	4,095	23,190
Regular + OT Wages	$ 85,689	$ 87,038	$ 88,583	$ 82,231	$ 74,671	$ 418,212
COVID Pay Options:						
$500 one-time						$ 45,900
$150/week	$ 26,568	$ 25,272	$ 24,948	$ 24,300	$ 24,300	$ 125,388
1.15x	$ 13,882	$ 14,100	$ 14,350	$ 13,321	$ 12,097	$ 67,750
1.5x (ATU request)	$ 46,272	$ 47,000	$ 47,835	$ 44,405	$ 40,323	$ 225,834
$2/hr	$ 10,505	$ 10,316	$ 10,602	$ 9,822	$ 8,846	$ 50,090

Board of Directors Memo

July 23, 2020

SUBJECT: Consider Award of RFB 20-13 for Cummins Auto Parts

Background

On April 13, 2020, a request for bid was released for the purchase of Cummins Auto Parts. A total of 2,600 email notices were sent to potential bidders. Of those potential bidders, four (4) firms submitted bids.

1. Bond Equipment Company
2. Industrial Power LLC
3. Kirk's Automotive Inc.
4. Muncie Reclamation & Supply dba Muncie Transit Supply

Staff conducted an evaluation of the bids and is recommending award to three firms.

Identified Need

Parts will be ordered on an as needed basis to perform repairs and preventative maintenance on existing fleet.

Financial Impact

Expenditures for auto parts are reimbursed by grant funds from the Federal Transit Administration (FTA) at 80% of the costs. The contracts to be awarded are for a 13-month term, effective August 1, 2020 through September 30, 2021. The anticipated expenses for FY 2020 are not to exceed $200,000. Funding for this agreement is available within the FY 20 operating budget. Expenses for future fiscal years will be included in the annual maintenance parts budget.

Recommendation

Staff is recommending award to Industrial Power LLC, Kirk's Automotive Inc., and Muncie Reclamation & Supply dba Muncie Transit Supply, per the attached spreadsheet detail.

Exhibits

Exhibit 1 – Items to be awarded
Exbibit 2 – Request for Bid Package
Exhibit 3 – Industrial Power, LLC's Bid
Exhibit 4 - Kirk's Automotive Inc.'s Bid
Exhibit 5 - Muncie Reclamation & Supply dba Muncie Transit Supply's Bid

Submitted By: _____
Geraldine Osinaike, Procurement Specialist

Final Review: _____
Nicole Recker, VP of Mobility Services and Administration

Approval: _____
Raymond Suarez, CEO

Bid #20-13 CUMMINS AUTO PARTS

				MUNCIE TRANSIT SUPPLY	KIRK'S AUTOMOTIVE	INDUSTRIAL POWER LLC
Item #	**Item**	**Qty**	**Unit**	**Total**	**Total**	**Total**
20-13-01-37	GASKET EXHAUST ELBOW TO PIPE GILLIG	15	each	**$64.35**	$185.85	$130.95
20-13-01-38	GASKET AFMDEVICE	40	each	**$204.00**	$320.00	$749.20
20-13-01-05	BELT MAIN NEW CHAMP	11	each	**$264.44**	$878.68	$857.01
20-13-01-04	OUTLET NOX SENSOR CHAMPION & EZ RIDER	9	each	**$2,700.00**	$2,691.00	$4,312.62
20-13-01-27	Exhaust Bellow	35	each	**$10,877.65**	$10,920.00	$12,989.90
20-13-01-29	DEF Harness	10	each	**$6,355.50**	$6,474.30	$7,677.90
20-13-01-23	DPF Filter	4	each	**$3,800.00**	$4,600.00	$9,717.04
20-13-01-18	DPF Filter	3	each	**$3,060.00**	$3,372.00	$5,016.78
20-13-01-20	DPF Filter	6	each	**$6,120.00**	$6,744.00	$6,372.96
20-13-01-24	DPF Filter	4	each	**$4,500.00**	$5,500.00	$10,825.04
20-13-01-21	DPF Filter	10	each	**$13,132.40**	$13,540.00	$13,179.70
20-13-01-15	INLET NOX SENSOR CHAMPION	9	each	**$2,925.00**	$3,005.91	$3,187.35
20-13-01-10	GASKET EGR AIR TUBE 700 GILLIG	14	each	$39.62	**$27.86**	$69.72
20-13-01-03	GASKET PARTICULATE GILLIG 1100	20	each	$139.60	**$135.00**	$240.20
20-13-01-01	GASKET PARTICULATE FILTER GILLIG1100	14	each	$181.86	**$150.50**	$448.28
20-13-01-09	GASKET AIR COMP MOUNTING NEW CHAMP	7	each	$158.69	**$58.66**	$146.30
20-13-01-35	GASKET OIL PAN	3	each	$383.61	**$285.00**	$358.56
20-13-01-02	SENSOR PRESSURE DIFF EXH GILLIG1100	6	each	$800.40	**$450.00**	$738.66
20-13-01-22	DPF Filter	10	each	$12,090.00	**$12,000.00**	$19,124.10
20-13-01-14	DEF DOSING UNIT PUMP CHAMPION	6	each	$7,599.36	**$4,080.00**	$4,712.34
20-13-01-16	AIR COMPRESSOR CHAMPION	8	each	$11,264.00	**$27.86**	$8,316.64
20-13-01-33	Fuel Pump	5	each		$11,495.00	**$8,683.40**
20-13-01-34	Fuel Pump	15	each		$44,250.00	**$34,885.80**
20-13-01-28	CPR Water Outlet Tube	4	each	$139.52	$181.84	**$128.16**
20-13-01-08	DOSER VALVE SEAL KIT NEW CHAMP EASYRIDER	6	each	$227.52	$300.00	**$212.70**
20-13-01-11	TURBO OIL RETURN CHAMPION	6	each	$353.40	$462.00	**$326.52**
20-13-01-07	COOLANT LOW SENSOR 16 17 GILLIG & EZ	6	each	$1,050.00	$738.00	**$560.94**
20-13-01-36	Oil Pan	3	each	$1,085.34	$1,596.00	**$1,068.24**
20-13-01-12	DOSER VALVE DEF INJ NEWCHAMP EASY RIDER	6	each	$2,198.76	$1,350.00	**$1,192.02**
20-13-01-06	EGR UPDATE KIT GILLIG 1100	5	each	$2,525.50	$3,345.00	**$2,361.30**
20-13-01-31	EGR Cooler Kit	10	each	$5,051.00	$6,690.00	**$4,722.60**
20-13-01-32	EGR Valve Kit	30	each	$19,515.00	$24,655.80	**$17,351.70**
20-13-01-13	EGR COOLER GILLIG	5	each	$5,670.50	$7,250.00	**$5,239.45**
20-13-01-30	EGR Cooler	20	each	$22,682.00	$27,980.00	**$20,957.80**
20-13-01-17	DPF Filter	3	each	$3,662.10	$7,145.43	**$3,450.93**
20-13-01-25	Turbo Actuator Kit	4	each	$5,092.68	$6,300.00	**$3,634.72**
20-13-01-19	DPF Filter	6	each	$7,810.14	$8,484.00	**$5,454.12**
20-13-01-26	Turbo Kit	4	each	$12,207.44	$13,803.28	**$11,245.04**
TOTAL				**$54,003.34**	**$17,214.88**	**$121,475.44**

Solicitation 20-13

Cummins Auto Parts Bid

Bid Designation: Public

Denton County Transportation Authority

Bid 20-13
Cummins Auto Parts Bid

Bid Number	20-13
Bid Title	Cummins Auto Parts Bid
Bid Start Date	Apr 13, 2020 9:20:14 AM CDT
Bid End Date	May 1, 2020 2:00:00 PM CDT
Bid Contact	Christa Christian Senior Procurement Specialist cchristian@dcta.net
Prices Good for	**90 days**
Bid Comments	**Denton County Transportation Authority (DCTA) is accepting sealed bids for Cummins Auto Parts, as set forth in the specifications herein.**

Item Response Form

Item	**20-13-01-01** - GASKET PARTICULATE FILTER GILLIG1100
Quantity	**14 each**
Unit Price	
Delivery Location	**Denton County Transportation Authority** DCTA - Bus Operations & Maintenance 1101 Teasley Lane Denton TX 76205 **Qty** 14

Description
Gillig 2871452

Item	**20-13-01-02** - SENSOR PRESSURE DIFF EXH GILLIG1100
Quantity	**6 each**
Unit Price	
Delivery Location	**Denton County Transportation Authority** DCTA - Bus Operations & Maintenance 1101 Teasley Lane Denton TX 76205 **Qty** 6

Description
Gillig 2871960

Item	**20-13-01-03** - GASKET PARTICULATE GILLIG 1100
Quantity	**20 each**

Unit Price

Delivery Location **Denton County Transportation Authority**
DCTA - Bus Operations & Maintenance
1101 Teasley Lane
Denton TX 76205
Qty 20

Description
Gillig 2880215

Item **20-13-01-04** - OUTLET NOX SENSOR CHAMPION & EZ RIDER
Quantity **9 each**
Unit Price

Delivery Location **Denton County Transportation Authority**
DCTA - Bus Operations & Maintenance
1101 Teasley Lane
Denton TX 76205
Qty 9

Description
Champion 2894939

Item **20-13-01-05** - BELT MAIN NEW CHAMP
Quantity **11 each**
Unit Price

Delivery Location **Denton County Transportation Authority**
DCTA - Bus Operations & Maintenance
1101 Teasley Lane
Denton TX 76205
Qty 11

Description
Champion 3978280

Item **20-13-01-06** - EGR UPDATE KIT GILLIG 1100
Quantity **5 each**
Unit Price

Delivery Location **Denton County Transportation Authority**
DCTA - Bus Operations & Maintenance
1101 Teasley Lane
Denton TX 76205
Qty 5

Description
Gillig 4352363

Item **20-13-01-07** - COOLANT LOW SENSOR 16 17 GILLIG & EZ
Quantity **6 each**
Unit Price

Delivery Location **Denton County Transportation Authority**
DCTA - Bus Operations & Maintenance
1101 Teasley Lane
Denton TX 76205
Qty 6

Description
Gillig 4359193

Item **20-13-01-08** - DOSER VALVE SEAL KIT NEW CHAMP EASYRIDER
Quantity **6 each**
Unit Price
Delivery Location **Denton County Transportation Authority**
DCTA - Bus Operations & Maintenance
1101 Teasley Lane
Denton TX 76205
Qty 6

Description
Champion 4376837

Item **20-13-01-09** - GASKET AIR COMP MOUNTING NEW CHAMP
Quantity **7 each**
Unit Price
Delivery Location **Denton County Transportation Authority**
DCTA - Bus Operations & Maintenance
1101 Teasley Lane
Denton TX 76205
Qty 7

Description
Champion 4896897

Item **20-13-01-10** - GASKET EGR AIR TUBE 700 GILLIG
Quantity **14 each**
Unit Price
Delivery Location **Denton County Transportation Authority**
DCTA - Bus Operations & Maintenance
1101 Teasley Lane
Denton TX 76205
Qty 14

Description
Gillig 4932615

Item **20-13-01-11** - TURBO OIL RETURN CHAMPION
Quantity **6 each**
Unit Price
Delivery Location **Denton County Transportation Authority**
DCTA - Bus Operations & Maintenance

1101 Teasley Lane
Denton TX 76205
Qty 6

Description
Champion 4936158

Item **20-13-01-12** - DOSER VALVE DEF INJ NEWCHAMP EASY RIDER
Quantity **6 each**
Unit Price
Delivery Location **Denton County Transportation Authority**
DCTA - Bus Operations & Maintenance
1101 Teasley Lane
Denton TX 76205
Qty 6

Description
EZ Rider 2871878NX

Item **20-13-01-13** - EGR COOLER GILLIG
Quantity **5 each**
Unit Price
Delivery Location **Denton County Transportation Authority**
DCTA - Bus Operations & Maintenance
1101 Teasley Lane
Denton TX 76205
Qty 5

Description
Gillig 4352253RX

Item **20-13-01-14** - DEF DOSING UNIT PUMP CHAMPION
Quantity **6 each**
Unit Price
Delivery Location **Denton County Transportation Authority**
DCTA - Bus Operations & Maintenance
1101 Teasley Lane
Denton TX 76205
Qty 6

Description
Champion 4387304RX

Item **20-13-01-15** - INLET NOX SENSOR CHAMPION
Quantity **9 each**
Unit Price
Delivery Location **Denton County Transportation Authority**
DCTA - Bus Operations & Maintenance
1101 Teasley Lane
Denton TX 76205

Qty 9

Description
Champion 5293295NX

Item **20-13-01-16** - AIR COMPRESSOR CHAMPION
Quantity **8 each**
Unit Price
Delivery Location **Denton County Transportation Authority**
DCTA - Bus Operations & Maintenance
1101 Teasley Lane
Denton TX 76205
Qty 8

Description
Champion 5301082RX

Item **20-13-01-17** - DPF Filter
Quantity **3 each**
Unit Price
Delivery Location **Denton County Transportation Authority**
DCTA - Bus Operations & Maintenance
1101 Teasley Lane
Denton TX 76205
Qty 3

Description
EZ Rider 2880491

Item **20-13-01-18** - DPF Filter
Quantity **3 each**
Unit Price
Delivery Location **Denton County Transportation Authority**
DCTA - Bus Operations & Maintenance
1101 Teasley Lane
Denton TX 76205
Qty 3

Description
EZ Rider 2871462

Item **20-13-01-19** - DPF Filter
Quantity **6 each**
Unit Price
Delivery Location **Denton County Transportation Authority**
DCTA - Bus Operations & Maintenance
1101 Teasley Lane
Denton TX 76205
Qty 6

Description

Champion 2871571

Item **20-13-01-20** - DPF Filter

Quantity **6 each**

Unit Price

Delivery Location **Denton County Transportation Authority**

DCTA - Bus Operations & Maintenance
1101 Teasley Lane
Denton TX 76205
Qty 6

Description
Champion 2871462

Item **20-13-01-21** - DPF Filter

Quantity **10 each**

Unit Price

Delivery Location **Denton County Transportation Authority**

DCTA - Bus Operations & Maintenance
1101 Teasley Lane
Denton TX 76205
Qty 10

Description
11/16/1700s Gillig 2880589

Item **20-13-01-22** - DPF Filter

Quantity **10 each**

Unit Price

Delivery Location **Denton County Transportation Authority**

DCTA - Bus Operations & Maintenance
1101 Teasley Lane
Denton TX 76205
Qty 10

Description
11/16/1700s Gillig 5295605

Item **20-13-01-23** - DPF Filter

Quantity **4 each**

Unit Price

Delivery Location **Denton County Transportation Authority**

DCTA - Bus Operations & Maintenance
1101 Teasley Lane
Denton TX 76205
Qty 4

Description
700s Gillig 4965244

Item **20-13-01-24** - DPF Filter
Quantity **4 each**
Unit Price
Delivery Location **Denton County Transportation Authority**
DCTA - Bus Operations & Maintenance
1101 Teasley Lane
Denton TX 76205
Qty 4

Description
700s Gillig 5287191NX

Item **20-13-01-25** - Turbo Actuator Kit
Quantity **4 each**
Unit Price
Delivery Location **Denton County Transportation Authority**
DCTA - Bus Operations & Maintenance
1101 Teasley Lane
Denton TX 76205
Qty 4

Description
Champion 4034315RX

Item **20-13-01-26** - Turbo Kit
Quantity **4 each**
Unit Price
Delivery Location **Denton County Transportation Authority**
DCTA - Bus Operations & Maintenance
1101 Teasley Lane
Denton TX 76205
Qty 4

Description
Champion 5322348RX

Item **20-13-01-27** - Exhaust Bellow
Quantity **35 each**
Unit Price
Delivery Location **Denton County Transportation Authority**
DCTA - Bus Operations & Maintenance
1101 Teasley Lane
Denton TX 76205
Qty 35

Description
Champion A04-26374-012

Item **20-13-01-28** - CPR Water Outlet Tube

Quantity **4 each**

Unit Price

Delivery Location **Denton County Transportation Authority**

DCTA - Bus Operations & Maintenance
1101 Teasley Lane
Denton TX 76205
Qty 4

Description
Champion 5260938

Item **20-13-01-29** - DEF Harness

Quantity **10 each**

Unit Price

Delivery Location **Denton County Transportation Authority**

DCTA - Bus Operations & Maintenance
1101 Teasley Lane
Denton TX 76205
Qty 10

Description
Champion A06-82809-000

Item **20-13-01-30** - EGR Cooler

Quantity **20 each**

Unit Price

Delivery Location **Denton County Transportation Authority**

DCTA - Bus Operations & Maintenance
1101 Teasley Lane
Denton TX 76205
Qty 20

Description
Gillig 4352253RX

Item **20-13-01-31** - EGR Cooler Kit

Quantity **10 each**

Unit Price

Delivery Location **Denton County Transportation Authority**

DCTA - Bus Operations & Maintenance
1101 Teasley Lane
Denton TX 76205
Qty 10

Description
Gillig 4352363

Item **20-13-01-32** - EGR Valve Kit

Quantity **30 each**

Unit Price

Delivery Location **Denton County Transportation Authority**
DCTA - Bus Operations & Maintenance
1101 Teasley Lane
Denton TX 76205
Qty 30

Description
All except Gillig 700s 5473296RX

Item **20-13-01-33** - Fuel Pump
Quantity **5 each**
Unit Price
Delivery Location **Denton County Transportation Authority**
DCTA - Bus Operations & Maintenance
1101 Teasley Lane
Denton TX 76205
Qty 5

Description
Champion 5398557RX

Item **20-13-01-34** - Fuel Pump
Quantity **15 each**
Unit Price
Delivery Location **Denton County Transportation Authority**
DCTA - Bus Operations & Maintenance
1101 Teasley Lane
Denton TX 76205
Qty 15

Description
Gillig 4954315RX

Item **20-13-01-35** - GASKET, OIL PAN
Quantity **3 each**
Unit Price
Delivery Location **Denton County Transportation Authority**
DCTA - Bus Operations & Maintenance
1101 Teasley Lane
Denton TX 76205
Qty 3

Description
Gillig 3930408

Item **20-13-01-36** - Oil Pan
Quantity **3 each**
Unit Price
Delivery Location **Denton County Transportation Authority**

DCTA - Bus Operations & Maintenance
1101 Teasley Lane
Denton TX 76205
Qty 3

Description
Gillig 4980381

Item **20-13-01-37** - GASKET EXHAUST ELBOW TO PIPE GILLIG
Quantity **15 each**
Unit Price
Delivery Location **Denton County Transportation Authority**

DCTA - Bus Operations & Maintenance
1101 Teasley Lane
Denton TX 76205
Qty 15

Description
Gillig 2866337

Item **20-13-01-38** - GASKET AFMDEVICE
Quantity **40 each**
Unit Price
Delivery Location **Denton County Transportation Authority**

DCTA - Bus Operations & Maintenance
1101 Teasley Lane
Denton TX 76205
Qty 40

Description
Champion 2866636

BIDDER'S QUESTIONNAIRE

1. Name of Contractor ("Business", herein)

2. Doing Business As (other business name if applicable)

3. Federal Tax ID Number

4. Business Mailing Address (include City/State/Zip Code)

5. Business Email Address

6. Business Telephone

Business Fax Number

7. Business Type

8. Number of Years in Business

9. Annual Gross Revenue for the past three years (M = Millions)

☐ $1M or Less ☐ $1M-$5M ☐ $5M-$10M

☐ $10M-$16M ☐ $16M+

10. Number of Employees

☐ 100 or Less ☐ 101-500 ☐ 501-750

☐ 751-1,000 ☐ 1,001+

11. Is Business a DBE Firm?

☐ Yes ☐ No

12. Is Business Owned by Minority Ethnicity?

☐ Yes ☐ No

13. Ethnic Group

Black American
Hispanic American
Native American
Other
Subcontinent Asian American
White/Caucasian
Asian Pacific American

14. Woman Owned?

☐ Yes ☐ No

15. Veteran Owned

☐ Yes ☐ No

16. Type of Work Performed

☐ Manufacturing ☐ Professional Service

19. Is any litigation pending against the Business?

☐ Yes ☐ No

20. Has the Business been debarred, suspended, proposed for debarment, and declared ineligible, voluntarily excluded or otherwise disqualified from bidding, proposing or contracting?

☐ Yes ☐ No

21. Has the Business ever been a defaulter, as principal, surety or otherwise?

☐ Yes ☐ No

22. Has the government or other public entity requested or required enforcement of any of its rights under a surety agreement on the basis of a default or in lieu of declaring the Business in default?

☐ Yes ☐ No

23. Is the Business in arrears upon a contract or debt?

☐ Yes ☐ No

24. Are there any proceedings pending relating to the Business' responsibility, debarment, suspension, voluntary exclusion or qualification to receive a public contract?

☐ Yes ☐ No

25. Have liquidated damages or penalty provisions been assessed against the Business for failure to complete the work on time or for any other reason?

☐ Yes ☐ No

26. If a "yes" response is given to questions 17-25, please provide a detailed explanation including dates, references to contract information, contacts, etc. (attach additional pages as necessary).
DCTA reserves the right to inquire further with respect thereto

27. List the name and business address of each person or each entity which has a 10% or more ownership or control interest in the Business (attach additional pages as necessary).

I, individually and on behalf of the business named above, do by my signature below certify that the information provided in this questionnaire is true and correct. I understand that if the information provided herein contains any false statements or any misrepresentations: 1) DCTA will have the grounds to terminate any or all contracts which DCTA has or may have with the business; 2) DCTA may disqualify the business named above from consideration for contracts and/or 3) DCTA may have grounds for initiating legal action under federal, state or local law. ***Note: This questionnaire is also a certification form; the information requested will be used to determine small business status as per 13 CFR Part 121. Additionally, this information will allow DCTA to report the amount of subcontracting activity for DCTA.***

Printed Name

Title

☐ Retail ☐ General/Technical Service

17. Has the Business, or any officer or partner thereof, failed to complete a contract?

☐ Yes ☐ No

18. Has the Bubsiness ever been declared "Not Responsible

☐ Yes ☐ No

Signature of owner

Date

Email Address

(Owner, CEO, President, Majority Stockholder or Designated Representative) Questions about this document should be directed to the Procurement Manager

BUY AMERICA CERTIFICATION
(STEEL OR MANUFACTURED PRODUCTS)
[61 FR 6302, Feb. 16, 1996, as amended at 74 FR 30239,
June 25, 2009]

General Requirement (as stated in 49 CFR 661.5)

(a) Except as provided in 49 CFR 661.7 and 49 CFR 661.11, no funds may be obligated by FTA for a grantee project unless all iron, steel, and manufactured products used in the project are produced in the United States.

(b) All steel and iron manufacturing processes must take place in the United States, except metallurgical processes involving refinement of steel additives.

(c) The steel and iron requirements apply to all construction materials made primarily of steel or iron and used in infrastructure projects such as, transit or maintenance facilities, rail lines, and bridges. These items include, but are not limited to, structural steel or iron, steel or iron beams and columns, running rail and contact rail. These requirements do not apply to steel or iron used as components or subcomponents of other manufactured products or rolling stock, or to bimetallic power rail incorporating steel or iron components.

(d) For a manufactured product to be considered produced in the United States:

(1) All of the manufacturing processes for the product must take place in the United States; and

(2) All of the components of the product must be of U.S. origin. A component is considered of U.S. origin if it is manufactured in the United States, regardless of the origin of its subcomponents.

If steel, iron, or manufactured products (as defined in 49 CFR 661.3 and 661.5) are being procured, the appropriate certificate as set forth below shall be completed and submitted by each bidder or offeror in accordance with the requirement contained in 49 CFR 661.13(b).

Certificate of Compliance with Buy America Requirements.
The bidder or offeror hereby certifies that it will comply with the requirements of 49 U.S.C. 5323(j)(1), and the applicable regulations in 49 CFR part 661.

Company

Name		Title	
Signature		Date	

Certificate of Non-Compliance with Buy America Steel or Manufactured Products Requirements The bidder or offeror hereby certifies that it cannot comply with the requirements of 49 U.S.C. 5323(j), but it may qualify for an exception to the requirement pursuant to 49 U.S.C. 5323(j)(2), as amended, and the applicable regulations in 49 C.F.R. 661.7.

Company

Name		Title	
Signature		Date	

Instructions for Certification: By signing and submitting this bid or proposal, the prospective lower tier participant is providing the signed certification set out below.

(1) It will comply and facilitate compliance with U.S. DOT regulations, "Non-procurement Suspension and Debarment," 2 CFR part 1200, which adopts and supplements the U.S. Office of Management and Budget (U.S. OMB) "Guidelines to Agencies on Government-wide Debarment and Suspension (Non-procurement)," 2 CFR part 180,

(2) To the best of its knowledge and belief, that its Principals and Subrecipients at the first tier:

a. Are eligible to participate in covered transactions of any Federal department or agency and are not presently:

(1) Debarred,
(2) Suspended,
(3) Proposed for debarment,
(4) Declared ineligible,
(5) Voluntarily excluded, or
(6) Disqualified,

b. Its management has not within a three-year period preceding its latest application or proposal been convicted of or had a civil judgment rendered against any of them for:

(1) Commission of fraud or a criminal offense in connection with obtaining, attempting to obtain, or performing a public (Federal, State, or local) transaction, or contract under a public transaction,
(2) Violation of any Federal or State antitrust statute, or
(3) Commission of embezzlement, theft, forgery, bribery, falsification or destruction of records, making any false statement, or receiving stolen property,

c. It is not presently indicted for, or otherwise criminally or civilly charged by a governmental entity (Federal, State, or local) with commission of any of the offenses listed in the preceding subsection 2.b of this Certification,

d. It has not had one or more public transactions (Federal, State, or local) terminated for cause or default within a three-year period preceding this Certification,

e. If, at a later time, it receives any information that contradicts the statements of subsections 2.a – 2.d above, it will promptly provide that information to FTA,

f. It will treat each lower tier contract or lower tier subcontract under its Project as a covered lower tier contract for purposes of 2 CFR part 1200 and 2 CFR part 180 if it:

(1) Equals or exceeds $25,000,
(2) Is for audit services, or
(3) Requires the consent of a Federal official, and

g. It will require that each covered lower tier contractor and subcontractor:
(1) Comply and facilitate compliance with the Federal requirements of 2 CFR parts 180 and 1200, and
(2) Assure that each lower tier participant in its Project is not presently declared by any Federal department or agency to be:

a. Debarred from participation in its federally funded Project,
b. Suspended from participation in its federally funded Project,
c. Proposed for debarment from participation in its federally funded Project,
d. Declared ineligible to participate in its federally funded Project,
e. Voluntarily excluded from participation in its federally funded Project, or
f. Disqualified from participation in its federally funded Project, and

3. It will provide a written explanation as indicated on a page attached in FTA's TEAM-Web or the Signature Page if it or any of its principals, including any of its first tier Subrecipients or its Third Party Participants at a lower tier, is unable to certify compliance with the preceding statements in this Certification Group.

Certification

Contractor

Name and Title of Contractor's Authorized Official

Signature Date

CONFLICT OF INTEREST QUESTIONNAIRE

FORM CIQ

For vendor or other person doing business with local governmental entity

This questionnaire is being filed in accordance with chapter 176 of the Local Government Code by a person doing business with the governmental entity.

OFFICE USE ONLY

Date Received

By law this questionnaire must be filed with the records administrator of the local government not later than the 7th business day after the date the person becomes aware of facts that require the statement to be filed. *See* Section 176.006, Local Government Code.

A person commits an offense if the person violates Section 176.006, Local Government Code. An offense under this section is a Class C misdemeanor.

1 Name of person doing business with local governmental entity.

2 ☐ **Check this box if you are filing an update to a previously filed questionnaire.**

(The law requires that you file an updated completed questionnaire with the appropriate filing authority not later than September 1 of the year for which an activity described in Section 176.006(a), Local Government Code, is pending and not later than the 7th business day after the date the originally filed questionnaire becomes incomplete or inaccurate.)

3 Describe each affiliation or business relationship with an employee or contractor of the local governmental entity who makes recommendations to a local government officer of the local governmental entity with respect to expenditure of money.

4 Describe each affiliation or business relationship with a person who is a local government office and who appoints or employs a local government officer of the local governmental entity that is the subject of this questionnaire.

CONFLICT OF INTEREST QUESTIONNAIRE

FORM CIQ

For vendor or other person doing business with local governmental entity

Page 2

5 **Name of local government officer with whom filer has affiliation or business relationship. (Complete this section only if the answer to A, B, or C is YES.)**

This section, item 5 including subparts A, B, C &D, must be completed for each officer with whom the filer has affiliation or business relationship. Attach additional pages to this Form CIQ as necessary.

A. Is the Local government officer named in this section receiving or likely to receive taxable income from the filer of the questionnaire?

☐ YES ☐ NO

B. Is the filer of the questionnaire receiving or likely to receive taxable income from or at the direction of the local government officer named in this section AND the taxable income is not from the local governmental entity?

☐ YES ☐ NO

C. Is the filer of this questionnaire affiliated with a corporation or other business entity that the local government officer serves as an officer or director, or holds an ownership of 10 percent or more?

☐ YES ☐ NO

D. Describe each affiliation or business relationship.

5
6

6 **Describe any other affiliation or business relationship that might cause a conflict of interest.**

5
6

7

Signature of person doing business with the governmental entity

Date

CERTIFICATION AND RESTRICTIONS ON LOBBYING

I , _____ hereby certify
(Name and title of official)

On behalf of that: _____
(Name of Bidder / Company Name)

- No federal appropriated funds have been paid or will be paid, by or on behalf of the undersigned, to any person for influencing or attempting to influence an officer or employee of any agency, a Member of Congress, and officer or employee of Congress, or an employee of a Member of Congress in connection with the awarding of any federal contract, the making of any federal grant, the making of any federal loan, the entering into of any cooperative agreement, and the extension, continuation, renewal, amendment, or modification of any federal contract, grant, loan, or cooperative agreement.

- If any funds other than federal appropriated funds have been paid or will be paid to any person influencing or attempting to influence an officer or employee of any agency, a Member of Congress, and officer or employee of Congress, or an employee of a Member of Congress in connection with the federal contract, grant, loan, or cooperative agreement, the undersigned shall complete and submit Standard Form – , "Disclosure Form to Report Lobbying," in accordance with its instructions.

- The undersigned shall require that the language of this certification be included in the award documents for all sub-awards at all tiers (including sub-contracts, sub- grants and contracts under grants, loans, and cooperative agreements) and that all sub-recipients shall certify and disclose accordingly.

This certification is a material representation of fact upon which reliance was placed when this transaction was made or entered into. Submission of this certification is a prerequisite for making or entering into this transaction imposed by 31 U.S.C. § 1352 (as amended by the Lobbying Disclosure Act of 1995). Any person who fails to file the required certification shall be subject to a civil penalty of not less than $10,000 and not more than $100,000 for each such failure.

The undersigned certifies or affirms the truthfulness and accuracy of the contents of the statements submitted on or with this certification and understands that the provisions of 31 U.S.C. Section 3801, et seq., are applicable thereto.

Name of Bidder / Company Name _____

Type or print name _____

Signature of Authorized Representative _____

Date _____

Signature of Notary and SEAL _____

NON-COLLUSION AFFIDAVIT

This affidavit must be completed and submitted with the bid/proposal

The authorized representative for bidder / proposer, _____, being first duly sworn, deposes and says that he or she is of the party making the foregoing bid, that the bid is not made in the interest of, or on behalf of, any undisclosed person, partnership, company, association, organization, or corporation; that the bid is genuine and not collusive or sham; that the bidder has not directly or indirectly induced or solicited any other bidder to put in a false or sham bid, and has not directly or indirectly colluded, conspired, connived, or agreed with any bidder or anyone else to put in a sham bid, or that anyone shall refrain from bidding; that the bidder has not in any manner, directly or indirectly, sought by agreement, communication, or conference with anyone to fix the bid price of the bidder or any other bidder, or to fix any overhead, profit, or cost element of the bid price, or of that of any other bidder, or to secure any advantage against the public body awarding the contract of anyone interested in the proposed contract; that all statements contained in the bid are true; and, further, that the bidder has not, directly or indirectly, submitted his or her bid price or any breakdown thereof, or the contents thereof, or divulged information or data relative thereto, or paid, and will not pay, any fee to any corporation, partnership, company, association, organization, bid depository, or to any member or agent thereof to effectuate a collusive or sham bid.

_____
Signature of Authorized Company Representative

_____
Name and Title of Authorized Company Representative

_____
Date

Subscribed and sworn to before me on _____ (Date)

(Notary Seal) _____ Signature Notary Public

Prohibition of Contracts with Companies Boycotting Israel

This form must be completed and submitted with the bid/proposal

House Bill 89, effective September 1, 2017, amended the Texas Government Code to add Chapter 2270, Prohibition of Contracts with Companies Boycotting Israel.

Effective September 1, 2017, a state agency and a political subdivision (which includes a transportation authority) may not enter a contract with a company for goods or services unless the contract contains a written verification from the company that; (i) it does not Boycott Israel; and (ii) will not Boycott Israel during the term of the contract.

"Boycott Israel" is defined to mean refusing to deal with, terminating business activities with, or otherwise taking any action that is intended to penalize, inflict economic harm on, or limit commercial relations specifically with Israel, or with a person or entity doing business in Israel or in an Israeli-controlled territory, but does not include an action made for ordinary business purposes.

"Company" is defined to mean a for-profit sole proprietorship, organization, association, corporation, partnership, joint venture, limited partnership, limited liability partnership, or limited liability company, including a wholly owned subsidiary, majority-owned subsidiary, parent company, or affiliate of those entities or business associations that exists to make a profit.

" I , _____ (Name of certifying official), the _____ (title or position of certifying official) of _____ (name of company), verifies that (i) it does not Boycott Israel; and (ii) will not Boycott Israel during the term of the Contract. This section does not apply if the Company is a sole proprietor, a non-profit entity or a governmental entity; and only applies if: (i) the Company has ten (10) or more fulltime employees and (ii) this Contract has a value of $100,000.00 or more to be paid under the terms of this Contract.

_____

Signature of Certifying Official Title:

Title: _____

Date: _____

SOLICITATION OVERVIEW AND ENDORSEMENT

SOLICITATION TYPE/No.	Request for Bids (RFB) 20-13
TITLE	Cummins Auto Parts
PROCUREMENT SCHEDULE	Dates and times are subject to change, any changes will be issued by addenda.

PRE BID/PROPOSAL MEETING DATE	N/A	PRE BID/PROPOSAL MEETING LOCATION	
QUESTIONS DUE	4/20/20 by 5:00 pm CST	RESPONSES TO QUESTIONS RELEASED	4/23/20 by 5:00 pm CST
DUE DATE/TIME	**May 1, 2020 at 2:00 pm CST**		

QUESTIONS/ CLARIFICATIONS

All requests for clarifications and questions shall be submitted in writing. No verbal questions will be accepted and no verbal replies will be provided. Bidders/Proposers must submit requests for changes to or approval of equals, clarifications and modifications of the specifications in writing. The solicitation documents can only be modified in writing. Procurement must receive the requests no later than the date indicated above. Procurement will issue a response to those requests to all bidders/proposers by posting the replies to BidSync no later than the date indicated above. DCTA assumes no responsibility for delayed or lost responses

ALL QUESTIONS AND REQUESTS FOR CLARIFICATIONS SHALL BE SENT TO

Christa Christian, CPPB
procurement@dcta.net
or submitted via BidSync at www.bidsync.com

RECEIPT OF BID/PROPOSAL

Prior to the time and date indicated above, all proposal packages must be hand delivered, electronically submitted or mailed to Procurement at:

DCTA
1955 Lakeway Drive, Suite 260
ATTN: Christa Christian, CPPB
SOLICITATION #20-13
Lewisville, Texas 75057

Proposal packages received after the due time and date shall not be considered and will be returned unopened. All bids/proposals shall be submitted in a sealed package with the company name and RFB/RFP number clearly marked on the outside. The clock in the reception area of DCTA is the official time for receipt of bids. Bids/Proposals submitted to other DCTA locations may be returned unopened and will not be considered in the award of the contract.

DCTA reserves the right to change the deadline for submitting bids/proposals. Further, DCTA reserves the right to unilaterally revise or amend the scope of services up to the time set for submitting bids/proposals. Such revisions and addenda, if any, shall be announced by addenda to this solicitation. Copies of such addenda shall be furnished to all prospective bidders/proposers.

ACCEPTANCE PERIOD

PROPOSALS SHALL REMAIN VALID FOR 90 DAYS FROM THE DUE DATE

DBE (DISADVANTAGED BUSINESS ENTERPRISE) PROGRAM

It is the policy of DCTA to create a level playing field on which DBEs, as defined in 49 CFR Part 26, can compete fairly for DOT-assisted contracts. Additionally, DCTA is committed to removing barriers to the participation of DBEs on DOT-assisted contracts. The DBE requirements of 49 CFR Part 26 applies to this procurement. By submitting its bid/proposal, Bidder/Proposer certifies that it will take all necessary and reasonable steps in accordance with 49 CFR Part 26 to ensure that DBEs are given the maximum opportunity to compete for and participate in the performance of this contract. Bidder/Proposer further certifies and agrees that it has not and will not discriminate on the basis of race, color, national origin, or sex in the award of subcontracts under this contract or in performance of this contract. DCTA's DBE Program is available at www.dcta.net

DBE GOAL ☐**yes** ☒**no** **DBE goal %**

DAVIS-BACON AND COPELAND ANTI-KICKBACK

The Davis-Bacon and Copeland Acts are codified at 40 USC 3141, et seq. and 18 USC 874. The Acts apply to grantee construction contracts and subcontracts that "at least partly are financed by a loan or grant from the Federal Government." 40 USC 3145(a), 29 CFR 5.2(h), 49 CFR 18.36(i) (5).The Acts apply to any construction contract over $2,000. 40 USC 3142(a), 29 CFR 5.5(a). 'Construction,' for purposes of the Acts, includes "actual construction, alteration and/or repair, including painting and decorating of public buildings and public works of the Government." 29 CFR 5.5(a).

CERTIFIED PAYROLL ☐**yes** ☒**no** **Wage Rate**

BID/PROPOSAL ENDORSEMENT **TO BE COMPLETED FOR HAND DELIVERED AND MAILED RESPONSES ONLY**

BUSINESS NAME			
CONTACT NAME		TITLE	
TELEPHONE		EMAIL	
ADDRESS			
SIGNATURE		**DATE**	

SCOPE OF WORK, TERMS AND CONDITIONS

1. CONTRACT

Submission of a bid constitutes an offer to perform the work specified and to be bound by the terms contained or referenced herein. Upon acceptance of the offer, and upon award of the Contract to the successful offeror (if any), this procurement solicitation document (entitled "Request for Bid") together with the completed and executed forms required herein, and all attachments hereto, together with the contract shall collectively constitute the Contract documents.

2. CONTRACT TERM

The term of the contract shall commence on June 1, 2020 through and including September 30, 2021.

3. PRICING AND ADJUSTMENTS

Pricing provided in the Bid by the vendor must remain constant for the duration of the contract, and all prices must be rounded to the nearest cent. All charges, surcharges, fees, and all costs associated with shipping must be reflected in the price. DCTA will not pay charges that are not stipulated in our contracts.

4. PRODUCTS AND SCOPE OF SERVICES

Items furnished under this pricing agreement shall conform to the manufacturer's specifications and shall perform the functions for which they were designed and manufactured. Bids must be brand name or equal items.

A. PRODUCT SUBSTITUTION

Item substitutes must be authorized and must be billed at contracted price. Substitute items must be equal to or greater.

A. CAPACITY

Vendor must prove beyond any doubt to DCTA that they are duly qualified, and capable to fulfill and abide by the specifications herein listed.

B. CORE EXCHANGE/CHARGES

All parts supplied which require core exchange shall be monitored by the Contractor(s) to ensure proper cores are returned to the Contractor(s). Core credit is to be issued within 30 days of receipt. Any core that is not usable or not returned shall be billed at the core price specified in this bid for that particular part.

C. ESTIMATED QUANTITIES

The estimated quantity to be purchased may be more or less. DCTA is not obligated to purchase any minimum amount and may purchase any reasonable amount greater than the estimate for the same unit price. Any limit on quantities available must be stated expressly in the proposal. DCTA will order on an as needed basis.

D. MINIMUM ORDER

There is no minimum order on this contract.

E. RETAIL SALES ESTABLISHMENTS

Retail Sales Establishments are defined as any facilities that the Contractor(s) uses on a regular basis to warehouse and/or sell merchandise, and at which the Contractor(s) conducts regular business transactions at either the retail or wholesale level.

Contractor(s) facility should provide:

- Walk-In and will-call order system during regular work hours.
- Customer service associate to support walk-in and will-call order system.
- Itemized sales receipts for all walk-in and will-call transactions.
- Availability of delivery.

F. ORDERING METHODS

Contractor(s) shall accept, the following ordering methods:

- Telephone
- Electronic (email)
- Over the counter/walk-in
- Online (internet)
- US Mail

Phone Orders – Contractor(s) will accept orders via telephone as part of this contract. Telephone orders must be accepted between the hours of 7:00 AM and 7:00 PM Central Standard Time (CST), Monday through Friday.

Electronic (email) Orders – Contractor(s) will accept orders via email as part of this contract. An email address to be used by ordering agencies for placing orders is to be in place before the commencement of this contract.

Walk-in Orders - see Retail Sales Establishments above

Internet/Web Orders – Contractor(s) will accept orders via internet/web as part of this contract. Web address to be used by ordering agencies for placing orders is to be in place before the commencement of this contract. Internet/web access must be 24 hours but orders must be accepted by the Contractor(s) between the hours of 7:00 AM and 7:00 PM Central Standard Time (CST), Monday through Friday.

G. ORDERING CONTACT

Contractor(s) shall provide the following ordering information to be used by DCTA:

- Email address
- Toll free phone number
- Toll free fax number
- Mailing address

H. ORDER ACKNOWLEDGEMENT

The Contractor(s) will provide DCTA with an order receipt acknowledgment via email or facsimile within one business day after receipt of an order. The acknowledgement will include:

- Purchase Order Number
- Description of goods and/or related products purchased
- Total Cost
- Delivery Date
- Identification of any Out of Stock Items

I. OUT-OF-STOCK REMEDY

In the event of an out-of-stock item, DCTA shall have the option to either request backorder or cancel the item from order, upon receipt of order acknowledgement identifying that said items are unavailable. Under no circumstances is the Contractor(s) permitted to make unauthorized substitutions or cancellations.

J. RE-MANUFACTURED PARTS

The Contractor(s) may provide remanufactured parts when new parts are not available and with authorization of DCTA. Used, previously installed or shop-worn parts shall not be accepted.

K. FREIGHT / DELIVERY CHARGES

Shall be included in the bid price. No additional fees for delivery or freight shall be paid by DCTA.

L. DELIVERY SCHEDULES

The Contractor(s) will deliver product within the one (1) allotted business days per the contract requirement, unless otherwise agreed to by DCTA. Delivery hours for DCTA are between the hours of 7:00 AM and 7:00 PM Central Standard Time (CST), Monday through Friday. Contractor(s) must notify DCTA within 12 hours of scheduled delivery time, if delivery cannot be made within the time frame specified in the contract.

M. DELIVERY FROM COMMERCIAL OUTLETS

Delivery of standard in-stock items from Contractor's local commercial store shall be accomplished within two hours. Delivery for non-standard, special order items will be accomplished by a scheduled delivery.

N. OVER THE COUNTER DELIVERY

Contractor(s) shall provide over the counter order and delivery at all of its commercial locations.

O. FREE ON BOARD (F.O.B.) DESTINATION (SHIPPING TERMS)

All prices offered shall be F.O.B. destination. Responsibility and liability for loss or damage for all orders shall remain with the Contractor(s) until final inspection and acceptance, when all responsibility shall pass to DCTA, except the responsibility for latent defects, fraud, and the warranty obligations. All emergency or rush deliveries that require special shipping and handling should be at DCTA's expense, with prior approval. Emergency or rush shipping charges shall be added to an invoice as a separate line item. In the event an emergency or rush delivery is required as the result of a Contractor(s)'s error; all shipping cost shall be paid by the Contractor(s).

P. SHIPPING REQUIREMENTS

The Vendor shall take necessary actions to assure that orders are shipped promptly, to include partial shipments where appropriate. Vendor will package goods in accordance with good commercial practice. Each shipping container shall be clearly and permanently marked as follows:

A. Vendor's name and address;

B. DCTA's purchase order number;

C. Container number and total number of containers, e.g. box 1 of 4 boxes; and

D. The number of the container bearing the packing slip (must accompany all goods delivered).

The packing slip (or shipping ticket) must state clearly purchase order number, packing slip number, number of items, stock number, destination of delivery and delivery date. Vendor shall bear cost of packaging unless otherwise provided.

Q. MANUFACTURER WARRANTY

The Contractor(s) agrees to honor all manufacturers' warranties and guarantees on all products offered as part of the Agreement. The Contractor(s) understands that if warranty extends beyond the term of the Contract, the Contractor(s) must agree to provide warranty services throughout the life of the warranty. These parts must be warranted to be free of defective parts and workmanship, provided they are properly installed on the vehicle for which they were intended, for the time and mileage shown in the product literature or catalog. Statement of warranty is to be provided by Contractor(s) with items delivered under this Agreement. For all items ordered, warranty begins on the date of delivery.

R. RETURN POLICY

Items purchased under this contract may be returned at no cost for a full refund if item is unused, in its original packaging and within thirty (30) calendar days of its delivery. Contractor(s) shall be responsible for picking up all returns within seven (7) working days of advance, written notification to include email and fax.

S. CREDIT POLICY

Contractor(s) will be responsible for the credit or replacement of all products, including those covered by manufacturer warranties. Contractor(s) shall provide credit for the following items:

- Items shipped in error
- Items that are returned within 30 calendar days of delivery
- Defective or freight-damaged items

The Contractor(s) cannot require DCTA to deal directly with the manufacturer. In all cases, DCTA shall have the option of taking an exchange or receiving a credit.

T. RESTOCKING FEES

Contractor(s) will not impose a restocking fee on the Purchasing Entity under this Agreement for the following:

- Item(s) returned that were damaged upon receipt
- Incorrect items shipped

- Items that are returned unopened in an original packaging
- Items that are returned, but exchanged for another item

U. PRODUCT RECALL PROCEDURES

The Contractor(s) shall provide recall notification, regardless of level, in writing to DCTA. Contractor(s) agrees to use commercially reasonable efforts in identifying the applicable manufacturer in order that DCTA may work with such manufacturer to handle any applicable recall issues.

V. INVOICING

1. The Contractor(s)'s invoice must identify, at a minimum, the information listed below:
2. Contract Number
3. DCTA's Purchase Order Number
4. Delivery Address of the order
5. Product(s) description
6. Manufacturer's product number
7. Quantities issued
8. Price per unit(s) and extended price(s)
9. Date ordered
10. Date delivered
11. Listing of returns or backorders

Failure to submit invoices to accounts payable can result in a delay in payment.

W. CONTRACT USAGE REPORT

CONTRACTOR(S) will track sales for DCTA through a Point of Sale system in order to supply quarterly reporting that will include DCTA, Spend, Invoice Number, Purchase Order Date, Contract Line Item Number, Manufacturer, Manufacturer Part Number, SKU#, Item Description, Unit of Measure, Quantity in Unit of Measure, Quantity, Contract Unit Price, Extended Contract Price, and Index Date in an Excel format by the designated due date for the appropriate quarter.

X. AD HOC REPORTING

The Contractor(s) shall have the ability to provide ad hoc reports at no cost.

Y. INDEFINITE QUANTITY CONTRACT

This is an indefinite delivery indefinite quantity contract

Z. CERTIFICATION OF SPECIFICATIONS COMPLIANCE

Contractor(s) certifies all products proposed in the bid meet or exceed all requirements of this specification as set forth in the request.

AA. SAMPLES / DEMOS

When requested, samples/demos shall be furnished to the Authority at no expense.

BB. DESCRIPTIVE LITERATURE

If bidding and equal, bidder is requested to submit descriptive literature sufficient in detail to enable an intelligent comparison of the specification of the product(s) bid. Failure to provide literature with this Request for Bid may result in rejection of the bid or that part of the bid.

CC. TECHNICAL INFORMATION

All bidders shall furnish technical information, bulletins and/or product identification specifications for each item bid. Material Safety Data Sheets and any required warnings regarding the safe use of the product(s) shall be included with bid.

DD. DCTA SERVICE/DELIVERY LOCATIONS:

The locations include, but are not limited to, the following:

Bus Operations and Maintenance

1101 Teasley Lane

Denton, TX 76205

DCTA reserves the right to add, delete or change delivery locations during the term of the contract.

EE. DELIVERY RESPONSIBILITY

DCTA will not be responsible for any material being delivered or services performed without a purchase order, signed by an authorized representative of DCTA.

FF. SHIPPING REQUIREMENTS

The Vendor shall take necessary actions to assure that orders are shipped promptly, to include partial shipments where appropriate. Vendor will package goods in accordance with good commercial practice. Each shipping container shall be clearly and permanently marked as follows:

A. Vendor's name and address;

B. DCTA's purchase order number;

C. Container number and total number of containers, e.g. box 1 of 4 boxes; and

D. The number of the container bearing the packing slip (must accompany all goods

E. delivered).

The packing slip (or shipping ticket) must state clearly purchase order number, packing slip number, number of items, stock number, destination of delivery and delivery date. Vendor shall bear cost of packaging unless otherwise provided.

GG. MANUFACTURER WARRANTY

The Contractor(s) agrees to honor all manufacturers' warranties and guarantees on all products offered as part of the Agreement. The Contractor(s) understands that if warranty extends beyond the term of the Contract, the Contractor(s) must agree to provide warranty services throughout the life of the warranty. These parts must be warranted to be free of defective parts and workmanship, provided they are properly installed on the vehicle for which they were intended, for the time and mileage shown in the product literature or catalog. Statement of warranty is to be provided by Contractor(s) with items delivered under this Agreement. For all items ordered, warranty begins on the date of delivery.

GENERAL TERMS AND CONDITIONS

1. CANCELLATION

The DCTA reserves the right to cancel this RFB or cancel the award of this contract at any time before execution of the contract by both parties if cancellation is deemed to be in DCTA's best interest. In no event shall the DCTA have any liability for the cancellation of award. The Bidder assumes the sole risk and responsibility for all expenses connected with the preparation of its bid.

2. EVALUATION AND AWARD OF CONTRACT

The Owner reserves the right to reject any and all bids, cancel and reissue the solicitation, waive any and all informalities except for the time of submission of the Bid and to negotiate contract terms with the Successful Bidder. The Owner also reserves the right to reject all nonconforming, non-responsive, unbalanced or conditional Bids. Also, the Owner reserves the right to reject the Bid of any Bidder if the Owner believes that it would not be in the best interest of the Project to make an award to that Bidder, whether because the Bid is not responsive or the Bidder is unqualified or has doubtful financial ability or fails to meet any other pertinent standard or criteria established by the Owner. Discrepancies in the multiplication of units of Work and unit prices will be resolved in favor of the unit prices. Discrepancies between the indicated sum of any column of figures and the correct sum thereof will be resolved in favor of the correct sum.

In evaluating Bids, the owner will consider the qualifications of the Bidders, whether or not the Bids comply with the prescribed requirements, unit prices, completion time, and other data, as may be requested in the Bid form or prior to the Notice of Award.

Because bids and offers can at times be ambiguous, DCTA reserves the right to request additional information before making an award. DCTA also reserves the right to seek clarification from any bidder or offeror about any statement in its bid that DCTA finds ambiguous.

The Owner may consider the qualifications and experience of any Subcontractors, Suppliers, or other persons or organizations proposed for those portions of the Work as to which the identity of Subcontractors, Suppliers, and other persons and organizations must be submitted as requested by the Owner.

The Owner may consider its past experience with the Bidder and any Subcontractors, Suppliers or other persons or organizations proposed to perform any portions of the Work, and the Owner reserves the right to reject any and all bids from persons or organizations with whom the Owner has previously experienced problems including but not limited to issues relating to performance, workmanship, and disputes or litigation.

The Owner may conduct such investigations as the owner deems necessary to assist in the evaluation of any Bid and to establish the responsibility, qualifications and financial stability of Bidders, proposed Subcontractors, Suppliers and other persons and organizations to perform and furnish the Work in accordance with the Contract Documents to the Owner's satisfaction within the prescribed time. DCTA may award the contract to responsible bidders/proposers possessing the ability to perform successfully under the terms and conditions of the procurement. Consideration will be given to such matters as bidders/proposers integrity, compliance with public policy, record of past performance, and financial and technical resources.

If contract is to be awarded, it will be awarded to the lowest responsive responsible Bidder whose bid will be in the best interests of the DCTA. DCTA will award the contract to a single supplier, affording DCTA the improved cost effectiveness as well as one stop shopping. If determined to be in the best interest of DCTA, it reserves the right to award to multiple bidders, to add and delete items and/or to order from multiple bidders.

The Procurement Manager shall recommend the bidder determined to be the lowest responsive and responsible bidder to the Denton County Transportation Authority Board of Directors. Based on the evaluation committees recommendation the DCTA Board of Directors will authorize the DCTA President to enter into a contract with the selected bidder.

3. ADDENDUM

The contents of all addendums sent to bidder are to be incorporated in the RFB documents and will become part of the contract documents.

4. PROOF OF INSURABILITY

Bidder must submit proof of insurability with their bid. Proof of insurability can be in the form of a letter from the Bidder's insurance provider stating the provider's commitment to insure the Bidder for the types of coverages and levels of coverages specified in this RFB.

5. CONFIDENTIALITY

It is in the public interest for the DCTA to receive as many bids as possible. The DCTA acknowledges the possible confidential nature of any aspect of the bid including the cost or price information requested by the Request for Bids, and the DCTA obliges itself in good faith not to disclose any page of the bid containing information which the Bidder clearly marks as confidential during the evaluation process. After contract award, disclosure of information shall be made only in accordance with Texas law and applicable Federal requirements.

6. TAXES

DCTA is tax exempt and shall furnish the successful bidder with the necessary tax exemption certificate.

7. INDEMNIFICATION

DCTA SHALL NOT BE LIABLE FOR ANY LOSS, DAMAGE, OR INJURY OF ANY KIND OR CHARACTER TO ANY PERSON OR PROPERTY ARISING FROM THE SERVICES OF THE CONTRACTOR PURSUANT TO THIS AGREEMENT. CONTRACTOR HEREBY WAIVES ALL CLAIMS AGAINST DCTA, ITS OFFICERS, AGENTS AND EMPLOYEES (COLLECTIVELY REFERRED TO IN THIS SECTION AS "DCTA") FOR DAMAGE TO ANY PROPERTY OR INJURY TO, OR DEATH OF, ANY PERSON ARISING AT ANY TIME AND FROM ANY CAUSE OTHER THAN THE NEGLIGENCE OR WILLFUL MISCONDUCT OF DCTA. CONTRACTOR AGREES TO INDEMNIFY AND SAVE HARMLESS DCTA FROM AND AGAINST ANY AND ALL LIABILITIES, DAMAGES, CLAIMS, SUITS, COSTS (INCLUDING COURT COSTS, ATTORNEYS' FEES AND COSTS OF INVESTIGATION) AND ACTIONS BY REASON OF INJURY TO OR DEATH OF ANY PERSON OR DAMAGE TO OR LOSS OF PROPERTY TO THE EXTENT CAUSED BY THE CONTRACTOR'S NEGLIGENT PERFORMANCE OF SERVICES UNDER THIS AGREEMENT OR BY REASON OF ANY ACT OR OMISSION ON THE PART OF CONTRACTOR, ITS OFFICERS, DIRECTORS, SERVANTS, AGENTS, EMPLOYEES, REPRESENTATIVES, CONTRACTORS, SUBCONTRACTORS, LICENSEES,

SUCCESSORS OR PERMITTED ASSIGNS (EXCEPT WHEN SUCH LIABILITY, CLAIMS, SUITS, COSTS, INJURIES, DEATHS OR DAMAGES ARISE FROM OR ARE ATTRIBUTED TO SOLE NEGLIGENCE OF DCTA). IF ANY ACTION OR PROCEEDING SHALL BE BROUGHT BY OR AGAINST DCTA IN CONNECTION WITH ANY SUCH LIABILITY OR CLAIM, CONTRACTOR, ON NOTICE FROM DCTA, SHALL DEFEND SUCH ACTION OR PROCEEDINGS AT CONTRACTOR'S EXPENSE, BY OR THROUGH ATTORNEYS REASONABLY SATISFACTORY TO DCTA. CONTRACTOR'S OBLIGATIONS UNDER THIS SECTION SHALL NOT BE LIMITED TO THE LIMITS OF COVERAGE OF INSURANCE MAINTAINED OR REQUIRED TO BE MAINTAINED BY CONTRACTOR UNDER THIS AGREEMENT. THIS PROVISION SHALL SURVIVE THE TERMINATION OF THIS AGREEMENT.

CONTRACTOR SHALL INDEMNIFY DCTA FOR ANY FINES AND LEGAL FEES INCURRED BECAUSE EMPLOYEES, AGENTS, OR WORKERS SUPPLIED BY CONTRACTOR ARE NOT AUTHORIZED TO WORK IN THE UNITED STATES.

8. PAYMENT

DCTA shall pay the BIDDER, upon the submission of proper invoices. Unless otherwise specified in this contract, payment shall be made within thirty (30) days of receipt of a complete and correct invoice.

Bidder's invoices for the services rendered shall be submitted to the following address.

DCTA Accounts Payable
PO Box 96
Lewisville, TX 75067
accountspayable@dcta.net

9. ASSIGNMENT

The successful bidder shall not assign, sell, transfer or convey the agreement completely or in part, without the prior written consent of DCTA.

10. VENUE

The agreement will be governed and construed according to the laws of the State of Texas; and venue for any action concerning this contract shall be in Denton County, Texas. The parties agree to submit to the personal and subject matter jurisdiction of said court.

11. INDEPENDENT CONTRACTOR

It is understood and agreed by and between the parties, that successful bidder, in satisfying conditions in this contract, is acting independently, and that DCTA assumes no responsibility or liabilities to any third party in connection with these actions. All services to be performed by successful bidder pursuant to this contract shall be in the capacity of an independent contractor, and not as an agent or employee of DCTA. Successful bidder shall supervise the performance of its

services and shall be entitled to control the manner and means by which its services are to be performed, subject to the terms of this contract.

12. PROTEST PROCEDURES

Protests relative to this procurement will be reviewed and adjudicated by DCTA in accordance with its Procurement Policy and Procedures Manual maintained in DCTA's offices in Lewisville, TX.

13. ADMINISTRATIVE REMEDIES

Denton County Transportation Authority reserves the right to accept or reject any and/or all bids, to waive any formalities and/or irregularities and to award the Contract in the best interest of the DCTA.

By submission of a bid in response to this solicitation, the Bidder agrees to exhaust its administrative remedies under DCTA's Procurement Regulations or Disputes Clause of any resulting contract prior to seeking judicial relief of any type in connection with any matter related to this solicitation, the award of any contract, and any dispute under any related contract. Protests relative to this procurement will be reviewed and adjudicated by DCTA in accordance with its Procurement Policy and Procedures Manual maintained in DCTA's offices in Lewisville, TX.

14. OPEN RECORDS

All responses submitted to DCTA become the property of DCTA and are subject to the Public Information Act (Texas Government Code Chapter 552). The interested firms/individuals should familiarize themselves with the provisions of that Act. In no event shall DCTA, or any of its agents, Representatives, consultants, directors, officers, or employees, be liable to a firm/individual for the disclosure of all or any portion of a response submitted pursuant to the RFB.

If a firm/individual has special concerns about information that it desires to make available to DCTA, but which it believes constitutes a trade secret, proprietary information or other information excepted from disclosure, such firm/individual should specifically and conspicuously designate each page of that information, which the Bidder believes, should not be disclosed outside DCTA. Disclosure of requested information will be subject to the Texas Public Information Act.

15. CONTRACT

The successful Bidder may be required to execute a contract prepared and approved by DCTA General Counsel.

16. PROHIBITION OF BOYCOTT ISREAL

Company verifies that (i) it does not Boycott Israel; and (ii) will not Boycott Israel during the term of the Contract. This section does not apply if the Company is a sole proprietor, a non-profit entity or a governmental entity; and only applies if: (i) the Company has ten (10) or more fulltime employees and (ii) this Contract has a value of $100,000.00 or more to be paid under the terms of this Contract.

17. PROHIBITION OF CONTRACTS WITH CERTAIN COMPANIES

DCTA is prohibited from entering into a contract with a company that does business with Iran, Sudan, or a foreign terrorist organization.

18. RELATIONSHIP AND WORK IN GENERAL

Contractor, an independent contractor, covenants and agrees to perform for the stated compensation, all of the services described in Scope of Work, Terms and Conditions of this

Contract. Contractor agrees to complete the work in a professional and workmanlike manner with a high degree of care to ensure the accuracy and timeliness thereof.

19. ASSIGNMENT OF PERSONNEL

Contractor agrees to assign qualified staff members including a Project Manager who shall be responsible for the task administration and work performance.

20. EMPLOYMENT OF PERSONNEL

Contractor agrees to employ, at its own expense, all personnel required in performing the services under this contract. Personnel employed by Contractor shall not be employees of, nor have any contractual relationship with DCTA. All personnel engaged in the work shall be fully qualified and shall be authorized or licensed to perform such work as required.

21. EMPLOYMENT OF VETERANS

Applicable to capital projects only-Contractor shall provide a hiring preference, to the extent practicable, to veterans (as defined in section 2108 of Title 5) who have the requisite skills and abilities to perform the construction work required under this contract. This shall not be understood, construed or enforced in any manner that would require an employer to give a preference to any veteran over any equally qualified applicant who is a member of any racial or ethnic minority, female, an individual with a disability, or a former employee.

22. USE OF SUBCONTRACTORS

The Contractor may utilize the services of specialty subcontractors on those parts of the work which, under normal contracting practices, are performed by specialty subcontractors.

No work or services under this Contract shall be subcontracted without the prior written approval of DCTA. DCTA reserves the right to reject any subcontractors proposed to be utilized on this project.

23. DBE SUBCONTRACTS

If DBE subcontractors are utilized to perform under this contract the contractor must make available to DCTA copies of all DBE subcontracts upon request. The subcontractor shall ensure that all subcontracts or agreements with the Prime to supply labor or materials require that the subcontract and all lower tier subcontracts be performed in accordance with 49 CFR Part 26.55.

24. INSPECTION OF WORK

DCTA shall have the right to review and inspect the progress of the work described herein at all times.

25. COPYRIGHT

No reports, maps, or other documents produced in whole or in part under this contract shall be the subject of an application for copyright by or on behalf of the Contractor. All reports, maps, and other documents produced under this contract shall become the property of DCTA. The Contractor shall, at its expense, defend all suits or proceedings instituted against DCTA and pay any award of damages assessed against DCTA in such suits or proceedings, insofar as the same are based on any claim that materials furnished or work performed under the contract constitutes an infringement of any patent, trade secret, copyright, or any other proprietary right.

26. PROPRIETARY RIGHTS

Contractor agrees not to release data or information about the results of the project to any person outside of DCTA without first obtaining written authorization to release such information from DCTA.

27. OWNERSHIP OF DOCUMENTS

The parties agree and understand that any and all documents produced under this Contract are the sole and exclusive property of DCTA and DCTA retains ownership of all such documentation including, but not limited to, studies, plans, specifications, intellectual property and all related documents. To the extent necessary, CONTRACTOR HEREBY ASSIGNS AND TRANSFERS ANY AND ALL COPYRIGHTS TO DCTA.

28. MAINTENANCE OF RECORDS

Bidder must maintain records to show actual time involved in performance of the Work.

29. CHANGES BY CONTRACTOR

If, during the performance of Work under the Contract, the Contractor finds it impracticable to comply strictly with the specifications, the Contractor will notify the DCTA Project Manager and Procurement Manager immediately in writing.

30. WRITTEN ACCEPTANCE BY DCTA

Any bids by Contractor that vary or add to this Contract shall be construed as additional terms or modifications and shall not become part of the Contract unless accepted in writing, by DCTA.

31. CHANGE ORDERS / CONTRACT MODIFICATIONS

All requests for changes in the work must be submitted in writing to the DCTA Project Manager. Changes shall be made only with the prior approval DCTA and only by appropriate written Change Order or Contract Modification as appropriate. The Procurement Manager may, at any time, by a written Change Order or Contract Modification, and without notice to the Surety (if any), make changes within the general scope of this Contract. If the change affects the Contractor's costs, then the Procurement Manager shall also make an equitable adjustment in the Contractor's compensation.

32. WHOLE AGREEMENTS

The Contract constitutes the whole of the agreement between the parties hereto and neither thereof has been induced to make or enter into the Contract by reason of any promise, agreement, representation, statement, or warranty other than contained herein.

33. PARTIAL INVALIDITY

If any term, provision, covenant, or condition of this agreement is held by a court of competent jurisdiction to be invalid, void, or unenforceable, the remainder of the provisions shall remain in full force and effect and shall in no way be affected, impaired, or invalidated.

34. TITLES AND HEADINGS FOR CONVENIENCE ONLY

As used throughout this Contract, titles and headings of sections are for convenience only, and shall not be used to aid in interpretation of the provisions contained herein.

35. COMPENSATION

The bidder shall be compensated for work in performance of the contract and per the agreed upon fees. The bidder shall include as part of his invoice a list of all subcontractors and the amounts to be paid to each of the subcontractors from this invoice. DCTA will require specific payment reporting criteria for all payments made to subcontractors and will provide additional information and forms upon selection as the awarded firm.

36. PROMPT PAYMENT

The prime contractor agrees to pay each subcontractor under this prime contract for satisfactory performance of its contract no later than 30 days from the receipt of each payment the prime contractor receives from the Denton County Transportation Authority. Any delay or postponement of payment from the above referenced time frame may occur only for good cause following written approval of the Denton County Transportation Authority. This clause applies to both DBE and non-DBE subcontracts and must be included in contracts between the Denton County Transportation Authority, the prime contractor, sub contracts and sub-recipients.

37. RETAINAGE

The prime contractor agrees to return retainage payments to each subcontractor within 30 days after the subcontractors work is satisfactorily completed. Any delay or postponement of payment from the above referenced time frame may occur only for good cause following written approval of the Denton County Transportation Authority. This clause applies to both DBE and non-DBE subcontracts.

38. MINORITY OWNED FINANCIAL INSTITUTIONS

In accordance with the requirements of 49 CFR Part 26, and grant agreements between DCTA and the Department of Transportation (DOT), to investigate the full extent of services offered by financial institutions owned and controlled by socially and economically disadvantaged individuals in the community, to make reasonable efforts to use these institutions, and to encourage prime contractors on DOT-assisted contract to make use of these institutions. Information regarding financial institutions may be obtained on-line from the Federal Reserve at http://www.federalreserve.gov/Releases/mob/current/default.htm

39. NON-DISCRIMINATION

The contractor, sub-recipient or subcontractor shall not discriminate on the basis of race, color, national origin, or sex in the performance of this contract. The contractor shall carry out applicable requirements of 49 CFR part 26 in the award and administration of DOT-assisted contracts. Failure by the contractor to carry out these requirements is a material breach of this contract, which may result in the termination of this contract or such other remedy as the recipient deems appropriate, which may include, but is not limited to:

(1) Withholding monthly progress payments;

(2) Assessing sanctions

(3) Liquidated damages; and/or

(4) Disqualifying the contractor from future bidding as non-responsible

40. GRATUITIES

It shall be unethical for any person to offer, give, or agree to give any DCTA officer or former DCTA officer, or for any DCTA officer or former DCTA officer to solicit, demand, accept, or agree to accept from another person, a gratuity or an offer of employment in connection with any decision, approval, disapproval, recommendation, or preparation of any part of a program requirement or a purchase request, influencing the content of any specification or procurement standard, rendering of advice, investigation, auditing, or in any other advisory capacity in any proceeding or application, request for ruling, determination, claim or controversy, or other particular matter, pertaining to any program requirement or a contract or subcontract, or to any solicitation therefore.

41. FUNDING

Funds for payment have been provided through the DCTA budget approved by the Board of Directors for this fiscal year only. State of Texas statutes prohibit the obligation and expenditure of public funds beyond the fiscal year for which a budget has been approved. Therefore, anticipated orders or other obligations that may arise past the end of the current DCTA fiscal year shall be subject to budget approval.

42. FEDERAL FUNDS

DCTA is a recipient of federal funds from the Federal Transit Authority (FTA) and as a recipient of federal funds specific clauses and certifications must be included in any contract that involves the disbursement of federal funds. If federal dollars will be utilized under this contract Bidders must adhere to the clauses and certifications if applicable. All required clauses and certifications will be included if applicable.

43. PROCUREMENT OF RECOVERED MATERIALS

If federal dollars are utilized for this project all contractors must comply with section 6002 of the Solid Waste Disposal Act, as amended by the Resource Conservation and Recovery Act.

44. SILENCE OF SPECIFICATIONS

The apparent silence of the specifications as to any detail or to the apparent omission from it of a detailed description concerning any point, shall be regarded as meaning that only the best commercial practices are to prevail. All interpretations of these specifications shall be made on the basis of this statement.

INSURANCE REQUIREMENTS

Bidders performing work on DCTA's behalf shall provide the DCTA a certificate of insurance or a copy of their insurance policy(s) evidencing the coverage and coverage provisions identified herein within ten (10) days of request from DCTA. Bidders shall provide DCTA evidence that all subcontractors performing work on the project have the same types and amounts of coverage as required herein or that the subcontractors are included under the bidder's policy. Work shall not commence until insurance has been approved by DCTA.

All insurance companies and coverage must be authorized by the Texas Department of Insurance to transact business in the State of Texas and must have a A.M. Best's rating A- or greater.

Listed below are the types and minimum amounts of insurances required and which must be maintained during the term of the contract. DCTA reserves the right to amend or require additional types and amounts of coverage or provisions depending on the nature of the work.

COMMERCIAL GENERAL LIABILITY:

- Bodily Injury/Property Damage per occurrence $1,000,000
- General Aggregate $2,000,000
- Products/Completed Aggregate $2,000,000
- Personal Advertising Injury per occurrence $1,000,000
- Fire Damage $100,000
- Medical Expense $5,000

BUSINESS AUTO LIABILITY

to include coverage for:

- Owned/Leased vehicles
- Non-owned vehicles
- Hired vehicles
- Combined Single Limit $1,000,000

WORKERS' COMPENSATION EMPLOYERS' LIABILITY

to include:
each accident
Disease Policy Limits
Disease each employee

Statutory Limits per occurrence

- Each accident $1,000,000
- Disease Policy Limits $1,000,000
- Disease each employee $1,000,000

ADDITIONAL INSURED:

The Commercial General Liability and Commercial Automobile Liability policies shall be endorsed to name DCTA, its directors and employees as additional insured regarding Bidder's operations in performance of this Contract.

WAIVER OF SUBROGATION:

The Workers' Compensation and Employers' Liability shall be endorsed to provide a waiver of subrogation in favor of DCTA, its officers, directors and employees.

COVERAGE PRIMARY:

Such insurance as is provided therein shall be primary and non-contributing with any other valid and collectible insurance available to DCTA. The limits of liability required above may be provided by a single policy of insurance or by a combination of primary, excess or umbrella policies. But in no event shall the total limits of liability available for any one occurrence or accident be less than the amounts required below.

NO COMMENCEMENT WITHOUT COVERAGE:

The Bidder shall not commence work at the site under this Contract until he/she has obtained all required insurance and until such insurance has been approved by DCTA. Bidder shall not allow any subcontractor to commence work until all similar required insurance has been obtained and approved. Approval of the insurance by DCTA shall not relieve or decrease the liability of the Bidder hereunder.

CERTIFICATES:

Certificate of Insurance evidencing insurance coverage as required shall be furnished to the Purchasing Manager prior to commencement of work and within ten (10) calendar days after the date of Notice of Award. CERTIFICATES SHALL BE PROVIDED BY BIDDER AND ANYONE INVOLVED IN THE PERFORMANCE OF WORK UNDER THIS CONTRACT (not otherwise included under Bidder's coverage), INCLUDING ALL SUBCONTRACTORS. All certificates from Bidder and any subcontractors must be issued reflecting DCTA as the certificate holder. All Certificates of Insurance shall reflect the Denton County Transportation Authority project number. Failure to furnish the required certificates of insurance within the time allowed shall not be considered cause for modification of any contractual time limits. All policies of insurance presented, as proof of compliance with the above requirements shall be on forms and with insurance companies approved by DCTA. All such insurance policies shall be provided by insurance companies having a Best's rating of A-VI rating or greater as shown in the most current issue of A.M. Best's Key Rating Guide. Policies of insurance issued by insurance companies not rated by Best's or have a Best's rating lower than A-VI will not be accepted as complying with the insurance requirements of the Contract unless such insurance companies are approved in writing prior to the award of the Contract. Certificate of Insurance shall contain transcripts from the proper office of the insurer, evidencing in particular those insured, the extent of the insurance, the location, and the cancellation clause as required below.

NO LAPSE OR CANCELLATION:

The Bidder and any subcontractor shall not cause any insurance to be canceled nor permit any insurance to lapse. All insurance policies shall include a clause to the effect that the policy shall not be canceled, reduced, restricted, or limited until thirty (30) days after DCTA has received written notice. In the event of cancellation or lapse of insurance, the Bidder shall notify DCTA immediately and unless otherwise

directed by DCTA, shall cease work until evidence of acceptable insurance coverage is supplied to DCTA.

BREACH:

Failure to maintain insurance coverage as required herein shall constitute a material breach and default.

Federal Clauses

Fly America Requirements – Applicability – all contracts involving transportation of persons or property, by air between the U.S. and/or places outside the U.S. These requirements do not apply to micro-purchases ($10,000 or less, except for construction contracts over $2,000). Contractor shall comply with 49 USC 40118 (the "Fly America" Act) in accordance with General Services Administration regulations 41 CFR 301-10, stating that recipients and subrecipients of Federal funds and their contractors are required to use US Flag air carriers for US Governmentfinanced international air travel and transportation of their personal effects or property, to the extent such service is available, unless travel by foreign air carrier is a matter of necessity, as defined by the Fly America Act. Contractor shall submit, if a foreign air carrier was used, an appropriate certification or memorandum adequately explaining why service by a US flag air carrier was not available or why it was necessary to use a foreign air carrier and shall, in any event, provide a certificate of compliance with the Fly America requirements. Contractor shall include the requirements of this section in all subcontracts that may involve international air transportation.

Buy America Requirements – Applicability – Construction Contracts and Acquisition of Goods or Rolling Stock (valued at more than $150,000) Contractor shall comply with 49 USC 5323(j) and 49 CFR 661, stating that Federal funds may not be obligated unless steel, iron, and manufactured products used in FTA-funded projects are produced in the United States, unless a waiver has been granted by FTA or the product is subject to a general waiver. General waivers are listed in 49 CFR 661.7, and include software, microcomputer equipment and small purchases (currently less than $150,000) made with capital, operating, or planning funds. Separate requirements for rolling stock are stated at 5323(j)(2)(C) and 49 CFR 661.11. Rolling stock must be manufactured in the US and have a minimum 60% domestic content for FY2016 and FY2017, a minimum 65% domestic content for FY2018 and FY2019 and a minimum 70% domestic content for FY2020 and beyond. A bidder or offeror shall submit appropriate Buy America certification to the recipient with all bids on FTA-funded contracts, except those subject to a general waiver. Proposals not accompanied by a completed Buy America certification shall be rejected as nonresponsive. This requirement does not apply to lower tier subcontractors.

Cargo Preference - Use of US-Flag Vessels – Applicability – Contracts involving equipment, materials or commodities which may be transported by ocean vessels. These requirements do not apply to micro-purchases ($10,000 or less, except for construction contracts over $2,000). Contractor shall: a. use privately owned US-Flag commercial vessels to ship at least 50% of the gross tonnage (computed separately for dry bulk carriers, dry cargo liners, and tankers) involved, whenever shipping any equipment, material, or commodities pursuant to the underlying contract to the extent such vessels are available at fair and reasonable rates for US flag commercial vessels; b. furnish within 20 working days following the loading date of shipments originating within the US or within 30 working days following the loading date of shipments originating outside the US, a legible copy of a rated, "on-board" commercial bill-of-lading in English for each shipment of cargo described herein to the Division of National Cargo, Office of Market Development, Maritime Administration, Washington, DC 20590 and to the recipient (through contractor in the case of a subcontractor's bill-of-lading.) c. include these requirements in all subcontracts issued pursuant to this contract when the subcontract involves the transport of equipment, material, or commodities by ocean vessel.

Energy Conservation – Applicability – All Contracts except micro-purchases ($10,000 or less, except for construction contracts over $2,000) Contractor shall comply with mandatory standards and policies relating to energy efficiency, stated in the state energy conservation plan issued in compliance with the Energy Policy & Conservation Act.

Clean Water – Applicability – All Contracts and Subcontracts over $150,000. Contractor shall comply with all applicable standards, orders or regulations issued pursuant to the Federal Water Pollution Control Act, as amended, 33 USC 1251 et seq. Contractor shall report each violation to the recipient and understands and agrees that the recipient shall, in turn, report each violation as required to FTA and the appropriate EPA Regional Office. Contractor shall include these requirements in each subcontract exceeding $150,000 financed in whole or in part with FTA assistance.

Lobbying – Applicability – Construction/Architectural and Engineering/Acquisition of Rolling Stock/Professional Service Contract/Operational Service Contract/Turnkey contracts over $100,000 Byrd Anti-Lobbying Amendment, 31 U.S.C. 1352, as amended by the Lobbying Disclosure Act of 1995, P.L. 104-65 [to be codified at 2 U.S.C. § 1601, et seq.] - Contractors who apply or bid for an award of $100,000 or more shall file the certification required by 49 CFR part 20, "New Restrictions on Lobbying." Each tier certifies to the tier above that it will not and has not used Federal appropriated funds to pay any person or organization for influencing or attempting to influence an officer or employee of any agency, a member of Congress, officer or employee of Congress, or an employee of a member of Congress in connection with obtaining any Federal contract, grant or any other award covered by 31 U.S.C. 1352. Each tier shall also disclose the name of any registrant under the Lobbying Disclosure Act of 1995 who has made lobbying contacts on its behalf with non-Federal funds with respect to that Federal contract, grant or award covered by 31 U.S.C. 1352. Such disclosures are forwarded from tier to tier up to the recipient.

Access to Records and Reports – Applicability – As shown below. These requirements do not apply to micro-purchases ($10,000 or less, except for construction contracts over $2,000) The following access to records requirements apply to this Contract:

1. Where the purchaser is not a State but a local government and is an FTA recipient or a subgrantee of FTA recipient in accordance with 49 CFR 18.36(i), contractor shall provide the purchaser, the FTA, the US Comptroller General or their authorized representatives access to any books, documents, papers and contractor records which are pertinent to this contract for the purposes of making audits, examinations, excerpts and transcriptions. Contractor shall also, pursuant to 49 CFR 633.17, provide authorized FTA representatives, including any PMO contractor, access to contractor's records and construction sites pertaining to a capital project, defined at 49 USC 5302(a)1, which is receiving FTA assistance through the programs described at 49 USC 5307, 5309 or 5311.
2. Where the purchaser is a State and is an FTA recipient or a subgrantee of FTA recipient in accordance with 49 CFR 633.17, contractor shall provide the purchaser, authorized FTA representatives, including any PMO Contractor, access to contractor's records and construction sites pertaining to a capital project, defined at 49 USC 5302(a)1, which receives FTA assistance through the programs described at 49 USC 5307, 5309 or 5311. By definition, a capital project excludes contracts of less than the simplified acquisition threshold currently set at $250,000.
3. Where the purchaser enters into a negotiated contract for other than a small purchase or under the simplified acquisition threshold and is an institution of higher education, a hospital or other non-profit organization and is an FTA recipient or a subgrantee of FTA recipient in accordance with 49 CFR 19.48, contractor shall provide the purchaser, the FTA, the US Comptroller General or their authorized representatives, access to any books, documents, papers and record of the
contractor which are directly pertinent to this contract for the purposes of making audits, examinations, excerpts and transcriptions.
4. Where a purchaser which is an FTA recipient or a subgrantee of FTA recipient in accordance with 49 USC 5325(a) enters into a contract for a capital project or improvement (defined at 49 USC 5302(a)1) through other than competitive bidding, contractor shall make available records related to the contract to the purchaser, the Secretary of USDOT and the US Comptroller General or any authorized officer or employee of any of them for the purposes of conducting an audit and inspection.
5. Contractor shall permit any of the foregoing parties to reproduce by any means whatsoever or to copy excerpts and transcriptions as reasonably needed.

6. Contractor shall maintain all books, records, accounts and reports required under this contract for a period of not less than three (3) years after the date of termination or expiration of this contract, except in the event of litigation or settlement of claims arising from the performance of this contract, in which case contractor agrees to maintain same until the recipient, FTA Administrator, US Comptroller General, or any of their authorized representatives, have disposed of all such litigation, appeals, claims or exceptions related thereto. Re: 49 CFR 18.39(i)(11).

FTA does not require the inclusion of these requirements in subcontracts.

Federal Changes – Applicability – All Contracts except micro-purchases ($10,000 or less, except for construction contracts over $2,000) Contractor shall comply with all applicable FTA regulations, policies, procedures and directives, including without limitation those listed directly or by reference in the Master Agreement between the recipient and FTA, as they may be amended or promulgated from time to time during the term of the contract. Contractor's failure to comply shall constitute a material breach of the contract.

Clean Air – Applicability – All contracts over $150,000. 1) Contractor shall comply with all applicable standards, orders or regulations pursuant to the Clean Air Act, 42 USC 7401 et seq. Contractor shall report each violation to the recipient and understands and agrees that the recipient will, in turn, report each violation as required to FTA and the appropriate EPA Regional Office. 2) Contractor shall include these requirements in each subcontract exceeding $150,000 financed in whole or in part with FTA assistance.

Recycled Products – Applicability – All contracts for items designated by the EPA, when the purchaser or contractor procures $10,000 or more of one of these items during the current or previous fiscal year using Federal funds. The contractor agrees to comply with all the requirements of Section 6002 of the Resource Conservation and Recovery Act (RCRA), as amended (42 U.S.C. 6962), including but not limited to the regulatory provisions of 40 CFR Part 247, and Executive Order 12873, as they apply to the procurement of the items designated in Subpart B of 40 CFR Part 247.

No Government Obligation to Third Parties – Applicability – All contracts except micropurchases ($10,000 or less, except for construction contracts over $2,000)

(1) The recipient and contractor acknowledge and agree that, notwithstanding any concurrence by the US Government in or approval of the solicitation or award of the underlying contract, absent the express written consent by the US Government, the US Government is not a party to this contract and shall not be subject to any obligations or liabilities to the recipient, the contractor, or any other party (whether or not a party to that contract) pertaining to any matter resulting from the underlying contract.

(2) Contractor agrees to include the above clause in each subcontract financed in whole or in part with FTA assistance. It is further agreed that the clause shall not be modified, except to identify the subcontractor who will be subject to its provisions.

Program Fraud and False or Fraudulent Statements or Related Acts – Applicability – All contracts except micro-purchases ($10,000 or less, except for construction contracts over $2,000)

(1) Contractor acknowledges that the provisions of the Program Fraud Civil Remedies Act of 1986, as amended, 31 USC 3801 et seq. and USDOT regulations, "Program Fraud Civil Remedies," 49 CFR 31, apply to its actions pertaining to this project. Upon execution of the underlying contract, contractor certifies or affirms the truthfulness and accuracy of any statement it has made, it makes, it may make, or causes to be made, pertaining to the underlying contract or FTA assisted project for which this contract work is being performed. In addition to other penalties that may be applicable, contractor further acknowledges that if it makes, or causes to be made, a false, fictitious, or fraudulent claim, statement, submittal, or certification, the US Government reserves the right to impose the penalties of the Program Fraud Civil Remedies Act (1986) on contractor to the extent the US Government deems appropriate.

(2) If contractor makes, or causes to be made, a false, fictitious, or fraudulent claim, statement, submittal, or certification to the US Government under a contract connected with a project that is financed in whole or in part with FTA assistance under the authority of 49 USC 5307, the Government reserves the right to impose the penalties of 18 USC 1001 and 49 USC 5307(n)(1) on contractor, to the extent the US Government deems appropriate. (3) Contractor shall include the above two clauses in each subcontract financed in whole or in part with FTA assistance. The clauses shall not be modified, except to identify the subcontractor who will be subject to the provisions.

Termination – Applicability – All Contracts over $10,000, except contracts with nonprofit organizations and institutions of higher learning, where the threshold is $250,000

a. Termination for Convenience (General Provision) the recipient may terminate this contract, in whole or in part, at any time by written notice to contractor when it is in the recipient's best interest. Contractor shall be paid its costs, including contract close-out costs, and profit on work performed up to the time of termination. Contractor shall promptly submit its termination claim to the recipient. If contractor is in possession of any of the recipient's property, contractor shall account for same, and dispose of it as the recipient directs.

b. Termination for Default [Breach or Cause] (General Provision) If contractor does not deliver items in accordance with the contract delivery schedule, or, if the contract is for services, and contractor fails to perform in the manner called for in the contract, or if contractor fails to comply with any other provisions of the contract, the recipient may terminate this contract for default. Termination shall be effected by serving a notice of termination to contractor setting forth the manner in which contractor is in default. Contractor shall only be paid the contract price for supplies delivered and accepted, or for services performed in accordance with the manner of performance set forth in the contract. If it is later determined by the recipient that contractor had an excusable reason for not performing, such as a strike, fire, or flood, events which are not the fault of or are beyond the control of contractor, the recipient, after setting up a new delivery or performance schedule, may allow contractor to continue work, or treat the termination as a termination for convenience.

c. Opportunity to Cure (General Provision) the recipient in its sole discretion may, in the case of a termination for breach or default, allow contractor an appropriately short period of time in which to cure the defect. In such case, the notice of termination shall state the time period in which cure is permitted and other appropriate conditions If contractor fails to remedy to the recipient's satisfaction the breach or default or any of the terms, covenants, or conditions of this Contract within ten (10) days after receipt by contractor or written notice from the recipient setting forth the nature of said breach or default, the recipient shall have the right to terminate the Contract without any further obligation to contractor. Any such termination for default shall not in any way operate to preclude the recipient from also pursuing all available remedies against contractor and its sureties for said breach or default.

d. Waiver of Remedies for any Breach In the event that the recipient elects to waive its remedies for any breach by contractor of any covenant, term or condition of this Contract, such waiver by the recipient shall not limit its remedies for any succeeding breach of that or of any other term, covenant, or condition of this Contract.

e. Termination for Convenience (Professional or Transit Service Contracts) the recipient, by written notice, may terminate this contract, in whole or in part, when it is in the recipient's interest. If the contract is terminated, the recipient shall be liable only for payment under the payment provisions of this contract for services rendered before the effective date of termination.

f. Termination for Default (Supplies and Service) If contractor fails to deliver supplies or to perform the services within the time specified in this contract or any extension or if the contractor fails to comply with any other provisions of this contract, the recipient may terminate this contract for default. The recipient shall terminate by delivering to contractor a notice of termination specifying the nature of default. Contractor shall only be paid the contract price for supplies delivered and accepted, or services performed in accordance with the manner or performance set forth in this contract. If, after termination for failure to fulfill contract obligations, it is determined that contractor was not in default, the rights and obligations of the parties shall be the same as if termination had been issued for the recipient's convenience.

g. Termination for Default (Transportation Services) If contractor fails to pick up the commodities or to perform the services, including delivery services, within the time specified in this contract or any extension or if contractor fails to comply with any other provisions of this contract, the recipient may terminate this contract for default. The recipient shall terminate by delivering to contractor a notice of termination specifying the nature of default. Contractor shall only be paid the contract price for services performed in accordance with the manner of performance set forth in this contract.
If this contract is terminated while contractor has possession of the recipient goods, contractor shall, as directed by the recipient, protect and preserve the goods until surrendered to the recipient or its agent. Contractor and the recipient shall agree on payment for the preservation and protection of goods. Failure to agree on an amount shall be resolved under the Dispute clause. If, after termination for failure to fulfill contract obligations, it is determined that contractor was not in default, the rights and obligations of the parties shall be the same as if termination had been issued for the recipient's convenience.

h. Termination for Default (Construction) If contractor refuses or fails to prosecute the work or any separable part, with the diligence that will insure its completion within the time specified, or any extension, or fails to complete the work within this time, or if contractor fails to comply with any other provisions of this contract, the recipient may terminate this contract for default. the recipient shall terminate by delivering to contractor a notice of termination specifying the nature of default. In this event, the recipient may take over the work and compete it by contract or otherwise, and may take possession of and use any materials, appliances, and plant on the work site necessary for completing the work. Contractor and its sureties shall be liable for any damage to the recipient resulting from contractor's refusal or failure to complete the work within specified time, whether or not contractor's right to proceed with the work is terminated. This liability includes any increased costs incurred by the recipient in completing the work.
Contractor's right to proceed shall not be terminated nor shall contractor be charged with damages under this clause if:
1. Delay in completing the work arises from unforeseeable causes beyond the control and without the fault or negligence of contractor. Examples of such causes include: acts of God, acts of the recipient, acts of another contractor in the performance of a contract with the recipient, epidemics, quarantine restrictions, strikes, freight embargoes; and
2. Contractor, within 10 days from the beginning of any delay, notifies the recipient in writing of the causes of delay. If in the recipient's judgment, delay is excusable, the time for completing the work shall be extended. The recipient's judgment shall be final and conclusive on the parties, but subject to appeal under the Disputes clauses.
If, after termination of contractor's right to proceed, it is determined that contractor was not in default, or that the delay was excusable, the rights and obligations of the parties will be the same as if termination had been issued for the recipient's convenience.

i. Termination for Convenience or Default (Architect & Engineering) the recipient may terminate this contract in whole or in part, for the recipient's convenience or because of contractor's failure to fulfill contract obligations. The recipient shall terminate by delivering to contractor a notice of termination specifying the nature, extent, and effective date of termination. Upon receipt of the notice, contractor shall (1) immediately discontinue all services affected (unless the notice directs otherwise), and (2) deliver to the recipient all data, drawings, specifications, reports, estimates, summaries, and other information and materials accumulated in performing this contract, whether completed or in process. If termination is for the recipient's convenience, it shall make
an equitable adjustment in the contract price but shall allow no anticipated profit on unperformed services. If termination is for contractor's failure to fulfill contract obligations, the recipient may complete the work by contact or otherwise and contractor shall be liable for any additional cost incurred by the recipient. If, after termination for failure to fulfill contract obligations, it is determined that contractor was not in default, the rights and obligations of the parties shall be the same as if termination had been issued for the recipient's convenience.

j. Termination for Convenience or Default (Cost-Type Contracts) the recipient may terminate this contract, or any portion of it, by serving a notice or

termination on contractor. The notice shall state whether termination is for convenience of the recipient or for default of contractor. If termination is for default, the notice shall state the manner in which contractor has failed to perform the requirements of the contract. Contractor shall account for any property in its possession paid for from funds received from the recipient, or property supplied to contractor by the recipient. If termination is for default, the recipient may fix the fee, if the contract provides for a fee, to be paid to contractor in proportion to the value, if any, of work performed up to the time of termination. Contractor shall promptly submit its termination claim to the recipient and the parties shall negotiate the termination settlement to be paid to contractor. If termination is for the recipient's convenience, contractor shall be paid its contract close-out costs, and a fee, if the contract provided for payment of a fee, in proportion to the work performed up to the time of termination. If, after serving a notice of termination for default, the recipient determines that contractor has an excusable reason for not performing, such as strike, fire, flood, events which are not the fault of and are beyond the control of contractor, the recipient, after setting up a new work schedule, may allow contractor to continue work, or treat the termination as a termination for convenience.

Government-Wide Debarment and Suspension (Nonprocurement) – Applicability – Contracts over $25,000 The Recipient agrees to the following:

(1) It will comply with the requirements of 2 C.F.R. part 180, subpart C, as adopted and supplemented by U.S. DOT regulations at 2 C.F.R. part 1200, which include the following: (a) It will not enter into any arrangement to participate in the development or implementation of the Project with any Third Party Participant that is debarred or suspended except as authorized by: 1 U.S. DOT regulations, "Nonprocurement Suspension and Debarment," 2 C.F.R. part 1200, 2 U.S. OMB, "Guidelines to Agencies on Governmentwide Debarment and Suspension (Nonprocurement)," 2 C.F.R. part 180, including any amendments thereto, and 3 Executive Orders Nos. 12549 and 12689, "Debarment and Suspension," 31 U.S.C. § 6101 note, (b) It will review the U.S. GSA "System for Award Management," https:// www.sam.gov, if required by U.S. DOT regulations, 2 C.F.R. part 1200, and (c) It will include, and require each of its Third Party Participants to include, a similar provision in each lower tier covered transaction, ensuring that each lower tier Third Party Participant: 1 Will comply with Federal debarment and suspension requirements, and 2 Reviews the "System for Award Management" at https://www.sam.gov, if necessary to comply with U.S. DOT regulations, 2 C.F.R. part 1200, and (2) If the Recipient suspends, debars, or takes any similar action against a Third Party Participant or individual, the Recipient will provide immediate written notice to the: (a) FTA Regional Counsel for the Region in which the Recipient is located or implements the
Project, (b) FTA Project Manager if the Project is administered by an FTA Headquarters Office, or (c) FTA Chief Counsel,

Contracts Involving Federal Privacy Act Requirements – Applicability – When a grantee maintains files on drug and alcohol enforcement activities for FTA, and those files are organized so that information could be retrieved by personal identifier, the Privacy Act requirements apply to all contracts except micro-purchases ($10,000 or less, except for construction contracts over $2,000)
The following requirements apply to the Contractor and its employees that administer any system of records on behalf of the Federal Government under any contract:

(1) The Contractor agrees to comply with, and assures the compliance of its employees with, the information restrictions and other applicable requirements of the Privacy Act of 1974, 5 U.S.C. § 552a. Among other things, the Contractor agrees to obtain the express consent of the Federal Government before the Contractor or its employees operate a system of records on behalf of the Federal Government. The Contractor understands that the requirements of the Privacy Act, including the civil and criminal penalties for violation of that Act, apply to those individuals involved, and that failure to comply with the terms of the Privacy Act may result in termination of the underlying contract.

(2) The Contractor also agrees to include these requirements in each subcontract to administer any system of records on behalf of the Federal Government financed in whole or in part with Federal assistance provided by FTA.

Civil Rights Requirements – Applicability – All contracts except micro-purchases ($10,000 or less, except for construction contracts over $2,000)
The following requirements apply to the underlying contract:
The Recipient understands and agrees that it must comply with applicable Federal civil rights laws and regulations, and follow applicable Federal guidance, except as the Federal Government determines otherwise in writing. Therefore, unless a Recipient or Program, including an Indian Tribe or the Tribal Transit Program, is specifically exempted from a civil rights statute, FTA requires compliance with that civil rights statute, including compliance with equity in service:

a. Nondiscrimination in Federal Public Transportation Programs. The Recipient agrees to, and assures that each Third Party Participant will, comply with Federal transit law, 49 U.S.C. § 5332 (FTA's "Nondiscrimination" statute): (1) FTA's "Nondiscrimination" statute prohibits discrimination on the basis of: (a) Race, (b) Color, (c) Religion, (d) National origin, (e) Sex, (f) Disability, (g) Age, or (h) Gender identity and (2) The FTA "Nondiscrimination" statute's prohibition against discrimination includes: (a) Exclusion from participation, (b) Denial of program benefits, or (c) Discrimination, including discrimination in employment or business opportunity, (3) Except as FTA determines otherwise in writing: (a) General. Follow: 1 The most recent edition of FTA Circular 4702.1, "Title VI Requirements and Guidelines for Federal Transit Administration Recipients," to the extent consistent with applicable Federal laws, regulations, and guidance, and 2 Other applicable Federal guidance that may be issued, but (b) Exception for the Tribal Transit Program. FTA does not require an Indian Tribe to comply with FTA program-specific guidelines for Title VI when administering its projects funded under the Tribal Transit Program,

b. Nondiscrimination – Title VI of the Civil Rights Act. The Recipient agrees to, and assures that each Third Party Participant will: (1) Prohibit discrimination based on: (a) Race, (b) Color, or (c) National origin, (2) Comply with: (a) Title VI of the Civil Rights Act of 1964, as amended, 42 U.S.C. § 2000d et seq., (b) U.S. DOT regulations, "Nondiscrimination in Federally-Assisted Programs of the Department of Transportation – Effectuation of Title VI of the Civil Rights Act of 1964," 49 C.F.R. part 21, and (c) Federal transit law, specifically 49 U.S.C. § 5332, as stated in the preceding section a, and (3) Except as FTA determines otherwise in writing, follow: (a) The most recent edition of FTA Circular 4702.1, "Title VI and Title VI-Dependent Guidelines for Federal Transit Administration Recipients," to the extent consistent with applicable Federal laws, regulations, and guidance. (b) U.S. DOJ, "Guidelines for the enforcement of Title VI, Civil Rights Act of 1964," 28 C.F.R. § 50.3, and (c) Other applicable Federal guidance that may be issued,

c. Equal Employment Opportunity. (1) Federal Requirements and Guidance. The Recipient agrees to, and assures that each Third Party Participant will, prohibit discrimination on the basis of race, color, religion, sex, or national origin, and: (a) Comply with Title VII of the Civil Rights Act of 1964, as amended, 42 U.S.C. § 2000e et seq., (b) Facilitate compliance with Executive Order No. 11246, "Equal Employment Opportunity," as amended by Executive Order No. 11375, "Amending Executive Order No. 11246, Relating to Equal Employment Opportunity," 42 U.S.C. § 2000e note, (c) Comply with Federal transit law, specifically 49 U.S.C. § 5332, as stated in section a, and (d) Comply with FTA Circular 4704.1other applicable EEO laws and regulations, as provided in Federal guidance, including laws and regulations prohibiting discrimination on the basis of disability, except as the Federal Government determines otherwise in writing, (2) General. The Recipient agrees to: (a) Ensure that applicants for employment are employed and employees are treated during employment without discrimination on the basis of their: 1 Race, 2 Color, 3 Religion, 4 Sex, 5 Disability, 6 Age, or 7 National origin, (b) Take affirmative action that includes, but is not limited to: 1 Recruitment advertising, 2 Recruitment, 3 Employment, 4 Rates of pay, 5

Other forms of compensation, 6 Selection for training, including apprenticeship, 7 Upgrading, 8 Transfers, 9 Demotions, 10 Layoffs, and 11 Terminations, but (b) Indian Tribe. Title VII of the Civil Rights Act of 1964, as amended, exempts Indian Tribes under the definition of "Employer". (3) Equal Employment Opportunity Requirements for Construction Activities. In addition to the foregoing, when undertaking “construction” as recognized by the U.S. Department of Labor (U.S. DOL), the Recipient agrees to comply, and assures the compliance of each Third Party Participant, with: (a) U.S. DOL regulations, “Office of Federal Contract Compliance Programs, Equal Employment Opportunity, Department of Labor,” 41 C.F.R. chapter 60, and (b) Executive Order No. 11246, “Equal Employment Opportunity,” as amended by Executive Order No. 11375, “Amending Executive Order No. 11246, Relating to Equal Employment Opportunity,” 42 U.S.C. § 2000e note,

d. Disadvantaged Business Enterprise. To the extent authorized by applicable Federal law, the Recipient agrees to facilitate, and assures that each Third Party Participant will facilitate, participation by small business concerns owned and controlled by socially and economically disadvantaged individuals, also referred to as “Disadvantaged Business Enterprises” (DBEs), in the Project as follows: 1) Requirements. The Recipient agrees to comply with: (a) Section 1101(b) of Map-21, 23 U.S.C. § 101 note, (b) U.S. DOT regulations, “Participation by Disadvantaged Business Enterprises in Department of Transportation Financial Assistance Programs,” 49 C.F.R. part 26, and (c) Federal transit law, specifically 49 U.S.C. § 5332, as stated in section a, (2) Assurance. As required by 49 C.F.R. § 26.13(a), (b) DBE Program Requirements. Recipients receiving planning, capital and/or operating assistance that will award prime third party contracts exceeding $250,000 in a Federal fiscal year must: 1 Have a DBE program meeting the requirements of 49 C.F.R. part 26, 2 Implement a DBE program approved by FTA, and 3 Establish an annual DBE participation goal, (c) Special Requirements for a Transit Vehicle Manufacturer. The Recipient understands and agrees that each transit vehicle manufacturer, as a condition of being authorized to bid or propose on FTA-assisted transit vehicle procurements, must certify that it has complied with the requirements of 49 C.F.R. part 26, (d) the Recipient provides assurance that: The Recipient shall not discriminate on the basis of race, color, national origin, or sex in the award and performance of any DOT-assisted contract or in the administration of its DBE program or the requirements of 49 C.F.R. part 26. The Recipient shall take all necessary and reasonable steps under 49 C.F.R. part 26 to ensure nondiscrimination in the award and administration of DOT-assisted contracts. The Recipient's DBE program, as required by 49 C.F.R. part 26 and as approved by DOT, is incorporated by reference in this agreement. Implementation of this program is a legal obligation and failure to carry out its terms shall be treated as a violation of this agreement. Upon notification to the Recipient of its failure to carry out its approved program, the Department may impose sanctions as provided for under 49 C.F.R. part 26 and may, in appropriate cases, refer the matter for enforcement under 18 U.S.C. § 1001 and/or the Program Fraud Civil Remedies Act of 1986, 31 U.S.C. § 3801 et seq., (2) Exception for the Tribal Transit Program. FTA exempts Indian tribes from the Disadvantaged Business Enterprise regulations at 49 C.F.R. part 26 under Map-21and previous legislation,

e. Nondiscrimination on the Basis of Sex. The Recipient agrees to comply with Federal prohibitions against discrimination on the basis of sex, including: (1) Title IX of the Education Amendments of 1972, as amended, 20 U.S.C. § 1681 et seq., (2) U.S. DOT regulations, “Nondiscrimination on the Basis of Sex in Education Programs or Activities Receiving Federal Financial Assistance,” 49 C.F.R. part 25, and (3) Federal transit law, specifically 49 U.S.C. § 5332, as stated in section a,

f. Nondiscrimination on the Basis of Age. The Recipient agrees to comply with Federal prohibitions against discrimination on the basis of age, including: (1) The Age Discrimination in Employment Act (ADEA), 29 U.S.C. §§ 621 – 634, which prohibits discrimination on the basis of age, (2) U.S. Equal Employment Opportunity Commission (U.S. EEOC) regulations, “Age Discrimination in Employment Act,” 29 C.F.R. part 1625, which implements the ADEA, (3) The Age Discrimination Act of 1975, as amended, 42 U.S.C. § 6101 et seq., which prohibits discrimination against individuals on the basis of age in the administration of programs or activities receiving Federal funds, (4) U.S. Health and Human Services regulations, “Nondiscrimination on the Basis of Age in Programs or Activities Receiving Federal Financial Assistance,” 45 C.F.R. part 90, which implements the Age Discrimination Act of 1975, and (5) Federal transit law, specifically 49 U.S.C. § 5332, as stated in section a,

g. Nondiscrimination on the Basis of Disability. The Recipient agrees to comply with the following Federal prohibitions pertaining to discrimination against seniors or individuals with disabilities: (1) Federal laws, including: (a) Section 504 of the Rehabilitation Act of 1973, as amended, 29 U.S.C. § 794, which prohibits discrimination on the basis of disability in the administration of federally funded programs or activities, (b) The Americans with Disabilities Act of 1990 (ADA), as amended, 42 U.S.C. § 12101 et seq., which requires that accessible facilities and services be made available to individuals with disabilities, 1 General. Titles I, II, and III of the ADA apply to FTA Recipients, but 2 Indian Tribes. While Titles II and III of the ADA apply to Indian Tribes, Title I of the ADA exempts Indian Tribes from the definition of “employer,” (c) The Architectural Barriers Act of 1968, as amended, 42 U.S.C. § 4151 et seq., which requires that buildings and public accommodations be accessible to individuals with disabilities, (d) Federal transit law, specifically 49 U.S.C. § 5332, which now includes disability as a prohibited basis for discrimination, and (e) Other applicable laws and amendments pertaining to access for elderly individuals or individuals with disabilities, (2) Federal regulations, including: (a) U.S. DOT regulations, “Transportation Services for Individuals with Disabilities (ADA),” 49 C.F.R. part 37, (b) U.S. DOT regulations, “Nondiscrimination on the Basis of Disability in Programs and Activities Receiving or Benefiting from Federal Financial Assistance,” 49 C.F.R. part 27, (c) U.S. DOT regulations, “Transportation for Individuals with Disabilities: Passenger Vessels,” 49 C.F.R. part 39, (d) Joint U.S. Architectural and Transportation Barriers Compliance Board (U.S. ATBCB) and U.S. DOT regulations, “Americans With Disabilities (ADA) Accessibility Specifications for Transportation Vehicles,” 36 C.F.R. part 1192 and 49 C.F.R. part 38, (e) U.S. DOJ regulations, “Nondiscrimination on the Basis of Disability in State and Local Government Services,” 28 C.F.R. part 35, (f) U.S. DOJ regulations, “Nondiscrimination on the Basis of Disability by Public Accommodations and in Commercial Facilities,” 28 C.F.R. part 36, (g) U.S. EEOC, “Regulations to Implement the Equal Employment Provisions of the Americans with Disabilities Act,” 29 C.F.R. part 1630, (h) U.S. Federal Communications Commission regulations, “Telecommunications Relay Services and Related Customer Premises Equipment for Persons with Disabilities,” 47 C.F.R. part 64, Subpart F, (i) U.S. ATBCB regulations, “Electronic and Information Technology Accessibility Standards,” 36 C.F.R. part 1194, and (j) FTA regulations, “Transportation for Elderly and Handicapped Persons,” 49 C.F.R. part 609, and (3) Other applicable Federal civil rights and nondiscrimination guidance,

h. Drug or Alcohol Abuse - Confidentiality and Other Civil Rights Protections. The Recipient agrees to comply with the confidentiality and civil rights protections of: (1) The Drug Abuse Office and Treatment Act of 1972, as amended, 21 U.S.C. § 1101 et seq., (2) The Comprehensive Alcohol Abuse and Alcoholism Prevention, Treatment and Rehabilitation Act of 1970, as amended, 42 U.S.C. § 4541 et seq., and (3) The Public Health Service Act, as amended, 42 U.S.C. §§ 290dd – 290dd-2,

i. Access to Services for People with Limited English Proficiency. Except as the Federal Government determines otherwise in writing, the Recipient agrees to promote accessibility of public transportation services to people whose understanding of English is limited by following: 1) Executive Order No. 13166, “Improving Access to Services for Persons with Limited English Proficiency,” August 11, 2000, 42 U.S.C. § 2000d-1 note, and (2) U.S. DOT Notice, “DOT Policy Guidance Concerning Recipients’ Responsibilities to Limited English Proficiency (LEP) Persons,” 70 Fed. Reg. 74087, December 14, 2005,

j. Other Nondiscrimination Laws. Except as the Federal Government determines otherwise in writing, the Recipient agrees to: (1) Comply with other applicable Federal nondiscrimination laws and regulations, and (2) Follow Federal guidance prohibiting discrimination.

k. Remedies. Remedies for failure to comply with applicable Federal Civil Rights laws and Federal regulations may be enforced as provided in those Federal laws or Federal regulations.

Breaches and Dispute Resolution – Applicability – All contracts over $150,000 Disputes arising in the performance of this contract which are not resolved by agreement of the parties shall be decided in writing by the recipient's authorized representative. This decision shall be final and conclusive unless within ten days from the date of receipt of its copy, contractor mails or otherwise furnishes a written appeal to the recipient's CEO. In connection with such appeal, contractor shall be afforded an opportunity to be heard and to offer evidence in support of its position. The decision of the recipient's CEO shall be binding upon contractor and contractor shall abide by the decision. FTA has a vested interest in the settlement of any violation of Federal law including the False Claims Act, 31 U.S.C. § 3729.

Performance During Dispute - Unless otherwise directed by the recipient, contractor shall continue performance under this contract while matters in dispute are being resolved. Claims for Damages - Should either party to the contract suffer injury or damage to person or property because of any act or omission of the party or of any of his employees, agents or others for whose acts he is legally liable, a claim for damages therefore shall be made in writing to such other party within ten days after the first observance of such injury or damage.

Remedies - Unless this contract provides otherwise, all claims, counterclaims, disputes and other matters in question between the recipient and contractor arising out of or relating to this agreement or its breach will be decided by arbitration if the parties mutually agree, or in a court of competent jurisdiction within the residing State.

Rights and Remedies - Duties and obligations imposed by the contract documents and the rights and remedies available thereunder shall be in addition to and not a limitation of any duties, obligations, rights and remedies otherwise imposed or available by law. No action or failure to act by the recipient or contractor shall constitute a waiver of any right or duty afforded any of them under the contract, nor shall any such action or failure to act constitute an approval of or acquiescence in any breach thereunder, except as may be specifically agreed in writing.

Disadvantaged Business Enterprise (DBE) – Applicability – Contracts over $10,000 awarded on the basis of a bid or proposal offering to use DBEs

a. This contract is subject to the requirements of Title 49, Code of Federal Regulations, Part 26, Participation by Disadvantaged Business Enterprises in Department of Transportation Financial Assistance Programs. The national goal for participation of Disadvantaged Business Enterprises (DBE) is 10%. The recipient's overall goal for DBE participation is listed elsewhere. If a separate contract goal for DBE participation has been established for this procurement, it is listed elsewhere.
b. The contractor shall not discriminate on the basis of race, color, national origin, or sex in the performance of this contract. The contractor shall carry out applicable requirements of 49 CFR Part 26 in the award and administration of this contract. Failure by the contractor to carry out these requirements is a material breach of this contract, which may result in the termination of this contract or such other remedy as the municipal corporation deems appropriate. Each subcontract the contractor signs with a subcontractor must include the assurance in this paragraph (see 49 CFR 26.13(b)).
c. If a separate contract goal has been established, Bidders/offerors are required to document sufficient DBE participation to meet these goals or, alternatively, document adequate good faith efforts to do so, as provided for in 49 CFR 26.53.
d. If no separate contract goal has been established, the successful bidder/offeror will be required to report its DBE participation obtained through race-neutral means throughout the period of performance.
e. The contractor is required to pay its subcontractors performing work related to this contract for satisfactory performance of that work no later than 30 days after the contractor's receipt of payment for that work from the recipient. In addition, the contractor may not hold retainage from its subcontractors or must return any retainage payments to those subcontractors within 30 days after the subcontractor's work related to this contract is satisfactorily completed or must return any retainage payments to those subcontractors within 30 days after incremental acceptance of the subcontractor's work by the recipient and contractor's receipt of the partial retainage payment related to the subcontractor's work.
f. The contractor must promptly notify the recipient whenever a DBE subcontractor performing work related to this contract is terminated or fails to complete its work, and must make good faith efforts to engage another DBE subcontractor to perform at least the same amount of work. The contractor may not terminate any DBE subcontractor and perform that work through its own forces or those of an affiliate without prior written consent of the recipient.

Prompt Payment – Applicability – All contracts except micropurchases $10,000 or less, (except for construction contracts over $2,000)

The prime contractor agrees to pay each subcontractor under this prime contract for satisfactory performance of its contract no later than 30 days from the receipt of each payment the prime contract receives from the Recipient. The prime contractor agrees further to return retainage payments to each subcontractor within 30 days after the subcontractors work is satisfactorily completed. Any delay or postponement of payment from the above referenced time frame may occur only for good cause following written approval of the Recipient. This clause applies to both DBE and non-DBE subcontracts.

Incorporation of Federal Transit Administration (FTA) Terms – Applicability – All contracts except micro-purchases ($10,000 or less, except for construction contracts over $2,000)

The preceding provisions include, in part, certain Standard Terms & Conditions required by USDOT, whether or not expressly stated in the preceding contract provisions. All USDOTrequired contractual provisions, as stated in FTA Circular 4220.1F, are hereby incorporated by reference. Anything to the contrary herein notwithstanding, all FTA mandated terms shall be deemed to control in the event of a conflict with other provisions contained in this Agreement. The contractor shall not perform any act, fail to perform any act, or refuse to comply with any request that would cause the recipient to be in violation of FTA terms and conditions.

Other Federal Requirements:

Full and Open Competition - In accordance with 49 U.S.C. $ 5325(h) all procurement transactions shall be conducted in a manner that provides full and open competition.

Prohibition Against Exclusionary or Discriminatory Specifications - Apart from inconsistent requirements imposed by Federal statute or regulations, the contractor shall comply with the requirements of 49 USC 5323(h)(2) by refraining from using any FTA assistance to support procurements using exclusionary or discriminatory specifications.

Conformance with ITS National Architecture - Contractor shall conform, to the extent applicable, to the National Intelligent Transportation Standards architecture as required by SAFETEA-LU Section 5307(c), 23 U.S.C. Section 512 note and follow the provisions of FTA Notice, "FTA National Architecture Policy on Transit Projects," 66 Fed. Reg.1455 etseq., January 8, 2001, and any other implementing directives FTA may issue at a later date, except to the extent FTA determines otherwise in writing.

Access Requirements for Persons with Disabilities - Contractor shall comply with 49 USC 5301(d), stating Federal policy that the elderly and persons with disabilities have the same rights as other persons to use mass transportation services and facilities and that special efforts shall be made in planning and designing those services and facilities to implement that policy. Contractor shall also comply with all applicable requirements of Sec. 504 of the Rehabilitation Act (1973), as amended, 29 USC 794, which prohibits discrimination on the basis of handicaps, and the Americans with Disabilities Act of 1990 (ADA), as amended, 42 USC 12101 et seq., which requires that accessible facilities and services be made available to persons with disabilities, including any subsequent amendments thereto.

Notification of Federal Participation - To the extent required by law, in the announcement of any third party contract award for goods and services (including construction services) having an aggregate value of $500,000 or more, contractor shall specify the amount of Federal assistance to be used in financing that acquisition of goods and services and to express that amount of Federal assistance as a percentage of the total cost of the third party contract.

Interest of Members or Delegates to Congress - No members of, or delegates to, the US Congress shall be admitted to any share or part of this contract nor to any benefit arising therefrom.

Ineligible Contractors and Subcontractors - Any name appearing upon the Comptroller General's list of ineligible contractors for federally-assisted contracts shall be ineligible to act as a subcontractor for contractor pursuant to this contract. If contractor is on the Comptroller General's list of ineligible contractors for federally financed or assisted construction, the recipient shall cancel, terminate or suspend this contract.

Other Contract Requirements - To the extent not inconsistent with the foregoing Federal requirements, this contract shall also include those standard clauses attached hereto, and shall comply with the recipient's Procurement Guidelines, available upon request from the recipient.

Compliance With Federal Regulations - Any contract entered pursuant to this solicitation shall contain the following provisions: All USDOT-required contractual provisions, as set forth in FTA Circular 4220.1F, are incorporated by reference. Anything to the contrary herein notwithstanding, FTA mandated terms shall control in the event of a conflict with other provisions contained in this Agreement. Contractor shall not perform any act, fail to perform any act, or refuse to comply with any grantee request that would cause the recipient to be in violation of FTA terms and conditions. Contractor shall comply with all applicable FTA regulations, policies, procedures and directives, including, without limitation, those listed directly or incorporated by reference in the Master Agreement between the recipient and FTA, as may be amended or promulgated from time to time during the term of this contract. Contractor's failure to so comply shall constitute a material breach of this contract.

Real Property - Any contract entered into shall contain the following provisions: Contractor shall at all times comply with all applicable statutes and USDOT regulations, policies, procedures and directives governing the acquisition, use and disposal of real property, including, but not limited to, 49 CFR 18.31-18.34, 49 CFR 19.30-19.37, 49 CFR Part 24, 49 CFR 5326 as amended by Map-21, 49 CFR part 18 or 19, 49 USC 5334, applicable FTA Circular 5010, and FTA Master Agreement, as they may be amended or promulgated during the term of this contract. Contractor's failure to so comply shall constitute a material breach of this contract.

Access to Services for Persons with Limited English Proficiency - To the extent applicable and except to the extent that FTA determines otherwise in writing, the Recipient agrees to comply with the policies of Executive Order No. 13166, "Improving Access to Services for Persons with Limited English Proficiency," 42 U.S.C. § 2000d 1 note, and with the provisions of U.S. DOT Notice, "DOT Guidance to Recipients on Special Language Services to Limited English Proficient (LEP) Beneficiaries," 70 Fed. Reg. 74087, December 14, 2005.

Environmental Justice - Except as the Federal Government determines otherwise in writing, the Recipient agrees to promote environmental justice by following: (1) Executive Order No. 12898, "Federal Actions to Address Environmental Justice in Minority Populations and Low-Income Populations," February 11, 1994, 42 U.S.C. $ 4321 note, as well as facilitating compliance with that Executive Order, and (2) DOT Order 5610.2, "Department of Transportation Actions To Address Environmental Justice in Minority Populations and Low-Income Populations," 62 Fed. Reg. 18377, April 15, 1997, and (3) The most recent and applicable edition of FTA Circular 4703.1, "Environmental Justice Policy Guidance for Federal Transit Administration Recipients," August 15, 2012, to the extent consistent with applicable Federal laws, regulations, and guidance,

Environmental Protections - Compliance is required with any applicable Federal laws imposing environmental and resource conservation requirements for the project. Some, but not all, of the major Federal laws that may affect the project include: the National Environmental Policy Act of 1969; the Clean Air Act; the Resource Conservation and Recovery Act; the comprehensive Environmental response, Compensation and Liability Act; as well as environmental provisions with Title 23 U.S.C., and 49 U.C. chapter 53. The U.S. EPA, FHWA and other federal agencies may issue other federal regulations and directives that may affect the project. Compliance is required with any applicable Federal laws and regulations in effect now or that become effective in the future.

Geographic Information and Related Spatial Data - (NOT APPLICABLE TO THE TRIBAL TRANSIT PROGRAM) Any project activities involving spatial data or geographic information systems activities financed with Federal assistance are required to be consistent with the National Spatial Data Infrastructure promulgated by the Federal Geographic Data Committee, except to the extent that FTA determines otherwise in writing.

Geographic Preference - All project activities must be advertised without geographic preference, (except in A/E under certain circumstances, preference for hiring veterans on transit construction projects and geographic-based hiring preferences as proposes to be amended in 2 CFR Part 1201).

Federal Single Audit Requirements - For State Administered Federally Aid Funded Projects Only Non Federal entities that expend $750,000 or more in a year in Federal awards from all sources are required to comply with the Federal Single Audit Act provisions contained in U.S. Office of Management and Budget (OMB) Circular No. A 133, "Audits of States, Local Governments, and Non Profit Organizations" (replaced with 2 CFR Part 200,"Uniform Administrative Requirements, Cost Principles, and Audit Requirements for Federal Awards" effective December 26, 2014 as applicable). Non Federal entities that expend Federal awards from a single source may provide a program specific audit, as defined in the Circular. Non Federal entities that expend less than the amount above in a year in Federal awards from all sources are exempt from Federal audit requirements for that year, except as noted in Sec. 215 (a) of OMB Circular A-133 Subpart B--Audits, records must be available for review or audit by appropriate officials of the cognizant Federal agency the New York State Department of Transportation, the New York State Comptrollers Office and the U.S. Governmental Accountability Office (GAO). Non Federal entities are required to submit a copy of all audits, as described above, within 30 days of issuance of audit report, but no later than 9 months after the end of the entity's fiscal year, to the New York State Department of Transportation, Contract Audit Bureau, 50 Wolf Road, Albany, NY 12232. Unless a time extension has been granted by the cognizant Federal Agency and has been filed with the New York State Department of Transportation's Contract Audit Bureau, failure to comply with the requirements of OMB Circular A-133 may result in suspension or termination of Federal award payments. Catalog of Federal Domestic Assistance (CFDA) Identification Number The municipal project sponsor is required to identify in its accounts all Federal awards received and expended, and the Federal programs under which they were received. Federal program and award identification shall include, as applicable, the CFDA title and number, award number and year, name of the Federal agency, and name of the pass through entity.

Veterans Preference - As provided by 49 U.S.C. 5325(k), to the extent practicable, the Recipient agrees and assures that each of its Subrecipients: (1) Will give a hiring preference to veterans, as defined in 5 U.S.C. § 2108, who have the skills and abilities required to perform construction work required under a third party contract in connection with a Capital Project supported with federal assistance appropriated or made available for 49 U.S.C. chapter 53, and (2) Will not require an employer to give a preference to any veteran over any equally qualified applicant who is a member of any racial or ethnic minority, female, an individual with a disability, or a former employee.

Safe Operation of Motor Vehicles

a. Seat Belt Use. The Recipient agrees to implement Executive Order No. 13043, “Increasing Seat Belt Use in the United States,” April 16, 1997, 23 U.S.C. § 402 note, (62 Fed. Reg. 19217), by: (1) Adopting and promoting on-the-job seat belt use policies and programs for its employees and other personnel that operate company-owned vehicles, company-rented vehicles, or personally operated vehicles, and (2) Including a “Seat Belt Use” provision in each third party agreement related to the Award. b. Distracted Driving, Including Text Messaging While Driving. The Recipient agrees to comply with: (1) Executive Order No. 13513, “Federal Leadership on Reducing Text Messaging While Driving,” October 1, 2009, 23 U.S.C. § 402 note, (74 Fed. Reg. 51225), (2) U.S. DOT Order 3902.10, “Text Messaging While Driving,” December 30, 2009, and (3) The following U.S. DOT Special Provision pertaining to Distracted Driving: (a) Safety. The Recipient agrees to adopt and enforce workplace safety policies to decrease crashes caused by distracted drivers, including policies to ban text messaging while using an electronic device supplied by an employer, and driving a vehicle the driver owns or rents, a vehicle Recipient owns, leases, or rents, or a privately-owned vehicle when on official business in connection with the Award, or when performing any work for or on behalf of the Award, (b) Recipient Size. The Recipient agrees to conduct workplace safety initiatives in a manner commensurate with its size, such as establishing new rules and programs to prohibit text messaging while driving, re-evaluating the existing programs to prohibit text messaging while driving, and providing education, awareness, and other outreach to employees about the safety risks associated with texting while driving, and (c) Extension of Provision. The Recipient agrees to include the preceding Special Provision of section 34.b(3)(a) – (b) of this Master Agreement in its third party agreements, and encourage its Third Party Participants to comply with this Special Provision, and include this Special Provision in each third party subagreement at each tier supported with federal assistance.

Catalog of Federal Domestic Assistance (CFDA) Identification Number - The municipal project sponsor is required to identify in its accounts all Federal awards received and expended, and the Federal programs under which they were received. Federal program and award identification shall include, as applicable, the CFDA title and number, award number and year, name of the Federal agency, and name of the pass through entity.

The CFDA number for the Federal Transit Administration - Nonurbanized Area Formula (Section 5311) is 20.509. A Recipient covered by the Single Audit Act Amendments of 1996 and OMB Circular A-133, "Audits of States, Local Governments, and Non-Profit Organizations," (replaced with 2 CFR Part 200,"Uniform Administrative Requirements, Cost Principles, and Audit Requirements for Federal Awards" effective December 26, 2014 as applicable) agrees to separately identify the expenditures for Federal awards under the Recovery Act on the Schedule of Expenditures of Federal Awards (SEFA) and the Data Collection Form (SF-SAC) required by OMB Circular A-133. The Recipient agrees to accomplish this by identifying expenditures for Federal awards made under Recovery Act separately on the SEFA, and as separate rows under Item 9 of Part III on the SF-SAC by CFDA number, and inclusion of the prefix "ARRA" in identifying the name of the Federal program on the SEFA and as the first characters in Item 9d of Part III on the SF-SAC.

Organizational Conflicts of Interest - The Recipient agrees that it will not enter into a procurement that involves a real or apparent

organizational conflict of interest described as follows: (1) When It Occurs. An organizational conflict of interest occurs when the Project work, without appropriate restrictions on certain future activities, results in an unfair competitive advantage: (a) To that Third Party Participant or another Third Party Participant performing the Project work, and (b) That impairs that Third Party Participant's objectivity in performing the Project work, or (2) Other. An organizational conflict of interest may involve other situations resulting in fundamentally unfair competitive conditions, (3) Disclosure Requirements. Consistent with FTA policies, the Recipient must disclose to FTA, and each of its Subrecipients must disclose to the Recipient: (a) Any instances of organizational conflict of interest, or (b) Violations of federal criminal law, involving fraud, bribery, or gratuity violations potentially affecting the federal award, and (4) Failure to Disclose. Failure to make required disclosures can result in remedies for noncompliance, including debarment or suspension.

Form 4906-B

Change of DBE Subcontractor Form

Prime Contractor: _____

Contract No.:_____ DBE Goal: _____

Original contract amount: _____ Current contract amount: _____

In accordance with the DCTA DBE program, when adding, changing or deleting subcontractors or suppliers on projects, the DBE Substitution Form shall be used. All changes to the original list of approved subcontractors or suppliers shall be submitted to DCTA's DBELO or Project Manager for review and approval prior to the use of any substitute contractor and/or supplier.

Contractors shall make a good faith effort to replace DBE subcontractors or suppliers unable to perform on the project with another DBE certified firm.

1. Is the subcontractor/supplier being replaced a DBE firm? YES___ NO____

2. Reason the subcontractor/supplier is being replaced:
_____
_____

3. Dollar amount and scope of work: _____

4. Name of the subcontractor/supplier being replaced:
_____

Contact Person:_____ Telephone No.:(____) _____

5. Percent of work/material that was completed/supplied by above named subcontractor /suppliers:_____

6. Amount paid to the subcontractor/supplier (if any) $_____

7. Document the efforts made to replace or add DBE subcontractors to perform required work_____

8. Name of substitute subcontractor/supplier:_____
Address:_____ Telephone: (____) _____
DBE Certified: YES____ NO_____
Contact Person:_____

This form should be completed and submitted to the DCTA DBELO for each subcontractor or supplier being added, deleted or changed. The same criterion used for establishing good faith efforts in maximizing the participation of DBE's prior to awarding this contract will also apply to the substitution of DBE subcontractors or suppliers during the performance of the contract.

Revised June 2015

COMMITMENT AGREEMENT FORM FOR ALL SUBCONTRACTORS

(Please complete one form for each subcontractor)

This commitment is subject to the award and receipt of a signed contract from the Denton County Transportation Authority for the subject project. This form must be completed and submitted with bid/offer.

Project Description:		**Contract No:**	

Items of work/service to be performed* (attach a list of work/service items, if more room is required):

Work/Service Description	NAICS	Unit Price	Quantity/Percentage	Total Per Item
				$ -
				$ -
				$ -
				$ -
				$ -
				$ -
				$ -
				$ -
				$ -
				$ -
				$ -
				$ -
				$ -
				$ -
				$ -

IMPORTANT! The signatures of the prime contractor, the subcontractor, and the total commitment amount must always be on the same page.

Prime Contractor:		**Name:**	

Contact Name:				**Title:**	
Address:				Signature:	
City:		ST, Zip			
Phone:		Fax:			
Email:				Date:	
Subcontractor:				**Name:**	
Federal ID:					
☐ 8(a) ☐ DBE ☐ MBE ☐ WBE ☐ SBE ☐ Non-Minority				**Title:**	
Certification Number:					
Contact Name:				Signature:	
Address:					
City:		ST, Zip:			
Phone:		Fax:			
Email:				Date:	
2nd Tier Sub:				**Name:**	
Federal ID:					
☐ 8(a) ☐ DBE ☐ MBE ☐ WBE ☐ SBE ☐ Non-Minority				**Title:**	
Certification Number:					
Contact Name:				Signature:	
Address:					
City:		ST, Zip:			
Phone:		Fax:			
Email:				Date:	

To ensure prompt and efficient handling of your project file, we are requesting that all commitments be presented to the DCTA DBELO using this form.

DISADVANTAGED BUSINESS ENTERPRISE PROVISIONS

I. Bidder/Proposer Information

Policy Statement: It is the policy of Denton County Transportation Authority and the Department of Transportation with respect to DOT-assisted contracts that Disadvantaged Business Enterprises as defined in 49 CFR Part 26 shall have the maximum opportunity to participate in the performance of DCTA contracts. DCTA also encourages the use of small business enterprises in performance on all contracts.

To attain these policy objectives, DCTA's overall agency goal for DBE participation is 7 % of federally funded contract amounts.

DBE Obligation: DCTA and its contractors agree to ensure that DBEs as defined in 49 CFR Part 26 have the maximum opportunity to participate in the performance of contracts and subcontracts awarded by DCTA. In this regard, DCTA and its contractors shall take all necessary and reasonable steps in accordance with 49 CFR Part 26 to ensure that DBEs have the maximum opportunity to compete for and perform contracts. DCTA and its contractors shall not discriminate on the basis of race, color, national origin, or sex in the award and performance of DCTA contracts, including DOT-assisted contracts.

It is the policy of the Denton County Transportation Authority (DCTA) to ensure that DBEs as defined in part 26, have an equal opportunity to receive and participate in DOT-assisted contracts. It is also our policy:

1. To ensure nondiscrimination in the award and administration of DOT - assisted contracts;
2. To create a level playing field on which DBEs can compete fairly for DOT-assisted contracts;
3. To ensure that the DBE Program is narrowly tailored in accordance with applicable law;
4. To ensure that only firms that fully meet 49 CFR Part 26 eligibility standards are permitted to participate as DBEs;
5. To help remove barriers to the participation of DBEs in DOT assisted contracts;
6. To assist the development of firms that can compete successfully in the market place outside the DBE Program.

"Disadvantaged Business Enterprise (DBE)" means a for-profit small business concern which (a) is at least 51 percent owned by one or more individuals who are both socially and economically disadvantaged, or, in the case of any publicly owned business in which 51 percent of the stock is owned by one or more such individuals, (b) whose management and daily business operations are controlled by one or more of the socially and economically disadvantaged individuals who

own it, and (c) is a small business concern as defined by the U.S. Small Business Administration (SBA).

DCTA shall make a refutable presumption that individuals in the following groups are socially and economically disadvantaged. DCTA may also determine, on a case-by-case basis, that individuals who are not a member of one of the following groups are DBEs:

1. Black Americans
2. Hispanic Americans
3. Native Americans
4. Asian-Pacific Americans
5. Subcontinent Asian Americans
6. Women, regardless of race, ethnicity, or origin
7. Any additional groups whose members are designated as socially and economically disadvantaged by the Small Business Administration.

Breach of Contract. All sub recipients, subcontractors, or contractors are advised that failure to carry out the requirements set forth in the Program shall constitute a breach of contract, and, after DOT is notified (on DOT-assisted agreements and/or contracts), may result in termination by DCTA of the agreement or contract, debarment, and/or such other remedy as DCTA deems appropriate.

DCTA has a written document that fully describes its DBE policy and program. The document is available upon request at the following address:

DCTA DBE Liaison Officer
1955 Lakeway Drive, Suite 260
Lewisville, Texas 75057

DCTA's DBE Program can be found at https://www.dcta.net/about-dcta/procurement-opportunities/dcta-disadvantaged-business-enterprise-program

II. Compliance Requirements

Compliance with the DBE Policy and Program is essential in order for a Bidder/Proposer to be eligible to enter into a contract with DCTA. Compliance consists of:

a. Meeting or exceeding the DCTA DBE percentage participation goals established for this solicitation; or
b. Demonstrating "Good Faith Efforts" to meet such participation goals; or
c. Demonstrating that the solicitation comes within the exception to the DBE percentage participation goals as being procurement for a standard manufactured item or other similar procurement not open to subcontracting opportunities.

In order to demonstrate compliance through "Good Faith Efforts", a Bidder/Proposer must submit with its bid/proposal sufficient information to enable DCTA to determine that the efforts made by the Bidder/Proposer to obtain DBE participation were such efforts that a Bidder/Proposer actively and aggressively seeking to meet those goals would make.

Actions or efforts, which are merely “pro forma” or “going through the motions,” do not constitute “Good Faith Efforts” to obtain the participation of DBEs. Similarly, even efforts which are sincerely motivated but which, given all circumstances relevant to the particular solicitation, could not be reasonably expected to produce a level of DBE participation sufficient to meet the goal do not constitute “Good Faith Efforts.” In determining whether a Bidder/Proposer made a Good Faith Effort to obtain the DBE participation percentage goal, DCTA will look at not only the different kinds of efforts that the Bidder/Proposer has made, but also the quality and intensity of these efforts.

To assist DCTA in making the required judgment concerning fulfillment of “Good Faith Efforts,” the Department of Transportation has prepared a list illustrating the kinds of actions, which would indicate that a Bidder/Proposer has made a Good Faith Effort. These kinds of efforts include:

a. Whether the Bidder/Proposer attended pre-bid meetings that were scheduled by DCTA to inform DBEs of contracting and sub-contracting opportunities; or
b. Whether the Bidder/Proposer selected portions of the work to be performed by certified DBEs in order to increase the likelihood of meeting the DBE goal (including, where appropriate, breaking down contracts into economically feasible units to facilitate DBE participations); or
c. Whether the Bidder/Proposer advertised in general circulation, trade association, and/or minority focus media concerning the sub-contracting opportunities; or
d. Whether the Bidder/Proposer provided written notice to a reasonable number of specified DBEs that their interest in the procurement was being solicited, in sufficient time to allow such DBEs to participate effectively, or
e. Whether the Bidder/Proposer followed up initial solicitation of interest by contacting DBEs to determine with certainty whether the DBEs were interested; or
f. Whether the Bidder/Proposer provided interested DBEs with adequate information about the plans, specifications, and requirements of the solicitation; or
g. Whether the Bidder/Proposer negotiated in good faith with interested DBEs, not rejecting DBEs as unqualified without sound reasons based on their investigation of the capabilities; or
h. Whether the Bidder/Proposer made efforts to assist interested DBEs in obtaining bonding, lines of credit, or insurance required by DCTA or the Bidder/Proposer as Contractor; or
i. Whether the Bidder/Proposer effectively used the services of available minority community organizations; minority contractor groups; local, state, and federal minority business assistance offices; and other organizations that provide assistance in the recruitment and placement of DBEs.

The above criterion is not intended to be an inventory or checklist. DCTA does not require any Bidder/Proposer to do any particular one or any combination of the items on the above list. It is not intended to be an exclusive or exhaustive list of all steps a Bidder/Proposer, acting in good faith, actively and aggressively seeking to obtain DBE participation would make. Other types of efforts or factors may be relevant in appropriate cases.

Competitors that fail to meet DBE goals and fail to demonstrate ""Good Faith Efforts"" may be considered non-responsive to the specifications and may be considered not eligible to be awarded the contract.

To ensure that all obligations under contracts awarded to DBEs are met, DCTA shall review the contractor's DBE involvement efforts during the performance of the contract. The contractor shall bring to the attention of DCTA any situation in which regularly scheduled progress payments are not made to DBE contractors.

III. Compliance Documentation

To demonstrate compliance with DCTA DBE Policy and Program, it is essential that all required documentation be submitted with the bid/proposal. This documentation consists of the following fully completed forms: DCTA Commitment Agreement Form 4906, and DCTA Good Faith Effort Form GFE, which appear in this Attachment, and additional relevant documentation and information where specified.

DCTA DBE Commitment Agreement Form 4906 **must** be completed by **all** Bidders/Proposers. DCTA Good Faith Effort Documentation also must be completed by a Bidder/Proposer who does not meet the DBE percentage participation goals established for this procurement but who wishes to show compliance with the Policy and Program because of having made Good Faith Efforts to meet those goals.

All information relative to the particular method of Bidder/Proposer's compliance as set out in this document **must be submitted with the bid/proposal**. Any bidder/proposer may also include any additional information it believes would be helpful in demonstrating to DCTA its compliance with DCTA DBE Policy Program. **Information submitted after the deadline for the submission of bids will not be considered.**

IV. Counting Participation Toward Meeting DBE Goal

DBE participation shall be counted toward meeting goals set in accordance with DOT's DBE regulations at 49 CFR Part 26 and DCTA's program as follows:

(a) When a DBE participates in a contract, you count only the value of the work actually performed by the DBE toward DBE goals.

(1) Count the entire amount of that portion of a construction contract (or other contract not covered by paragraph (a)(2) of this section) that is performed by the DBE's own forces. Include the cost of supplies and materials obtained by the DBE for the work of the contract, including supplies purchased or equipment leased by the DBE (except supplies and equipment the DBE subcontractor purchases or leases from the prime contractor or its affiliate).

(2) Count the entire amount of fees or commissions charged by a DBE firm for providing a bona fide service, such as professional, technical, consultant, or managerial services, or for providing bonds or insurance specifically required for the performance of a DOT-assisted contract, toward DBE goals, provided you determine

the fee to be reasonable and not excessive as compared with fees customarily allowed for similar services.

(3) When a DBE subcontracts part of the work of its contract to another firm, the value of the subcontracted work may be counted toward DBE goals only if the DBE's subcontractor is itself a DBE. Work that a DBE subcontracts to a non-DBE firm does not count toward DBE goals.

(b) When a DBE performs as a participant in a joint venture, count a portion of the total dollar value of the contract equal to the distinct, clearly defined portion of the work of the contract that the DBE performs with its own forces toward DBE goals.

(c) Count expenditures to a DBE contractor toward DBE goals only if the DBE is performing a commercially useful function on that contract.

(1) A DBE performs a commercially useful function when it is responsible for execution of the work of the contract and is carrying out its responsibilities by actually performing, managing, and supervising the work involved. To perform a commercially useful function, the DBE must also be responsible, with respect to materials and supplies used on the contract, for negotiating price, determining quality and quantity, ordering the material, and installing (where applicable) and paying for the material itself. To determine whether a DBE is performing a commercially useful function, you must evaluate the amount of work subcontracted, industry practices, whether the amount the firm is to be paid under the contract is commensurate with the work it is actually performing and the DBE credit claimed for its performance of the work, and other relevant factors.

(2) A DBE does not perform a commercially useful function if its role is limited to that of an extra participant in a transaction, contract, or project through which funds are passed in order to obtain the appearance of DBE participation. In determining whether a DBE is such an extra participant, you must examine similar transactions, particularly those in which DBEs do not participate.

(3) If a DBE does not perform or exercise responsibility for at least 30 percent of the total cost of its contract with its own work force, or the DBE subcontracts a greater portion of the work of a contract than would be expected on the basis of normal industry practice for the type of work involved, you must presume that it is not performing a commercially useful function.

(4) When a DBE is presumed not to be performing a commercially useful function as provided in paragraph (c)(3) of this section, the DBE may present evidence to rebut this presumption. You may determine that the firm is performing a commercially useful function given the type of work involved and normal industry practices.

(5) Your decisions on commercially useful function matters are subject to review by the concerned operating administration, but are not administratively appealable to DOT.

(d) Use the following factors in determining whether a DBE trucking company is performing a commercially useful function:

(1) The DBE must be responsible for the management and supervision of the entire trucking operation for which it is responsible on a particular contract, and there

cannot be a contrived arrangement for the purpose of meeting DBE goals.

(2) The DBE must itself own and operate at least one fully licensed, insured, and operational truck used on the contract.

(3) The DBE receives credit for the total value of the transportation services it provides on the contract using trucks it owns, insures, and operates using drivers it employs.

(4) The DBE may lease trucks from another DBE firm, including an owner-operator who is certified as a DBE. The DBE who leases trucks from another DBE receives credit for the total value of the transportation services the lessee DBE provides on the contract.

(5) The DBE may also lease trucks from a non-DBE firm, including from an owner-operator. The DBE who leases trucks from a non-DBE is entitled to credit for the total value of transportation services provided by non-DBE lessees not to exceed the value of transportation services provided by DBE-owned trucks on the contract. Additional participation by non-DBE lessees receives credit only for the fee or commission it receives as a result of the lease arrangement. If a recipient chooses this approach, it must obtain written consent from the appropriate Department Operating Administration.

(6) For purposes of this paragraph (d), a lease must indicate that the DBE has exclusive use of and control over the truck. This does not preclude the leased truck from working for others during the term of the lease with the consent of the DBE, so long as the lease gives the DBE absolute priority for use of the leased truck. Leased trucks must display the name and identification number of the DBE.

(e) Count expenditures with DBEs for materials or supplies toward DBE goals as provided in the following:

(1)(i) If the materials or supplies are obtained from a DBE manufacturer, count 100 percent of the cost of the materials or supplies toward DBE goals.

(ii) For purposes of this paragraph (e)(1), a manufacturer is a firm that operates or maintains a factory or establishment that produces, on the premises, the materials, supplies, articles, or equipment required under the contract and of the general character described by the specifications.

(2)(i) If the materials or supplies are purchased from a DBE regular dealer, count 60 percent of the cost of the materials or supplies toward DBE goals.

(ii) For purposes of this section, a regular dealer is a firm that owns, operates, or maintains a store, warehouse, or other establishment in which the materials, supplies, articles or equipment of the general character described by the specifications and required under the contract are bought, kept in stock, and regularly sold or leased to the public in the usual course of business.

(A) To be a regular dealer, the firm must be an established, regular business that engages, as its principal business and under its own name, in the purchase and sale or lease of the products in question.

(B) A person may be a regular dealer in such bulk items as petroleum products, steel, cement, gravel, stone, or asphalt without owning, operating, or maintaining a place of business as provided in this paragraph (e)(2)(ii) if the person both owns and operates distribution equipment for the products. Any supplementing of regular dealers' own distribution equipment shall be by a long-term lease agreement and not on an ad hoc or contract-by-contract basis.

(C) Packagers, brokers, manufacturers' representatives, or other persons who arrange or expedite transactions are not regular dealers within the meaning of this paragraph (e)(2).

(3) With respect to materials or supplies purchased from a DBE which is neither a manufacturer nor a regular dealer, count the entire amount of fees or commissions charged for assistance in the procurement of the materials and supplies, or fees or transportation charges for the delivery of materials or supplies required on a job site, toward DBE goals, provided you determine the fees to be reasonable and not excessive as compared with fees customarily allowed for similar services. Do not count any portion of the cost of the materials and supplies themselves toward DBE goals, however.

(f) If a firm is not currently certified as a DBE in accordance with the standards of subpart D of this part at the time of the execution of the contract, do not count the firm's participation toward any DBE goals, except as provided for in § 26.87(i)).

(g) Do not count the dollar value of work performed under a contract with a firm after it has ceased to be certified toward your overall goal.

(h) Do not count the participation of a DBE subcontractor toward a contractor's final compliance with its DBE obligations on a contract until the amount being counted has actually been paid to the DBE.

V. Termination/Substitution of a DBE

Denton County Transportation Authority (DCTA) requires that prime contractors not terminate a DBE subcontractor listed on a bid/contract with a DBE contract goal without DCTA'S PRIOR written consent. Prior written consent will only be provided where there is "good cause" for termination of the DBE firm, as established by Section 26.53(f)(3) of the DBE regulation.

The contractor shall utilize the specific DBE's listed to perform the work and supply the materials for which each is listed unless the contractor obtains written consent from DCTA. Without written consent by DCTA, the contractor shall not be entitled to any payment for work or material unless it is supplied by the listed DBE.

Before transmitting to Denton County Transportation Authority (DCTA) its request to terminate, the prime contractor must give notice in writing to the DBE subcontractor, with a copy to DCTA, of its intent to request to terminate and/or substitute, and the reason for the request. A copy of this notice must be provided to Denton County Transportation Authority (DCTA) prior to consideration of the request to terminate. The DBE will then have five (5) days to respond and advise Denton

County Transportation Authority (DCTA) of why it objects to the proposed termination.

In those instances where "good cause" exists to terminate a DBE's contract, Denton County Transportation Authority (DCTA) will require the prime contractor to make good faith efforts to find another DBE subcontractor to substitute for the original subcontractor. These good faith efforts shall be directed at finding another DBE to perform at least the same amount of work under the contract as the DBE that was terminated, to the extent needed to meet the contract goal established for the procurement. The good faith efforts shall be documented by the contractor. We will require the prime contractor to notify the DBE Liaison officer immediately of the DBE's inability or unwillingness to perform and provide reasonable documentation. Contractor is required to submit Form 4906B Change of Subcontractor Form to DCTA for review and approval.

In this situation, DCTA will require the prime contractor to obtain prior approval of the substitute DBE and to provide copies of new or amended subcontracts, or documentation of good faith efforts.

If the contractor fails or refuses to comply in the time specified, DCTA's contracting officer may issue an order stopping all or part of payment/work until satisfactory action has been taken. If the contractor still fails to comply, the contracting officer may issue a termination for default proceeding.

VI. Monitoring Payments to DBEs

We will require prime contractors to maintain records and documents of payments to DBEs for three years following the performance of the contract. These records will be made available for inspection upon request by any authorized representative of the Denton County Transportation Authority (DCTA) or DOT. This reporting requirement also extends to any certified DBE subcontractor.

We will perform interim audits of contract payments to DBEs. The audit will review payments to DBE subcontractors to ensure that the actual amount paid to DBE subcontractors equals or exceeds the dollar amounts stated in the schedule of DBE participation.

The contractor is required to submit Form 4907 Monthly Subcontractor Progress Report to DCTA no later than the 10th calendar day of the month for the previous month activity.

At the completion of the project the contractor will be required to submit Form 4908 Subcontractor final Report to DCTA for review and approval.

VII. Transit Vehicle Manufacturers

Only those transit vehicle manufacturers listed on FTA's certified list of Transit Vehicle Manufacturers, or that have submitted a goal methodology to FTA that has been approved or has not been disapproved, at the time of solicitation are eligible to bid.

A TVM's failure to implement the DBE Program in the manner as prescribed in this section and throughout 49 CFR part 26 will be deemed as non-compliance, which will result in removal from FTA's certified TVMs list, resulting in that manufacturer becoming ineligible to bid.

FTA recipient's failure to comply with the requirements set forth in paragraph (a) of this section may result in formal enforcement action or appropriate sanction as determined by FTA (e.g., FTA declining to participate in the vehicle procurement).

DCTA is required to submit within 30 days of making an award, the name of the successful bidder, and the total dollar value of the contract in the manner prescribed in the grant agreement.

If you are a transit vehicle manufacturer, you must establish and submit for FTA's approval an annual overall percentage goal.

The requirements of this part with respect to submission and approval of overall goals apply to you as they do to recipients.

Transit vehicle manufacturers awarded must comply with the reporting requirements of §26.11 of this part including the requirement to submit the Uniform Report of Awards or Commitments and Payments, in order to remain eligible to bid on FTA assisted transit vehicle procurements.

Transit vehicle manufacturers must implement all other applicable requirements of this part, except those relating to UCPs and DBE certification procedures.

Denton County
Transportation Authority

Form 4907

DENTON COUNTY TRANSPORTATION AUTHORITY
MONTHLY SUBCONTRACTOR PROGRESS REPORT

Contract No.:	**number**	**Reporting Period** (M/D/Yr to M/D/Yr)	**date to date**
Contractor:	**Name**	**Original Contract Amount:**	**$ -**
DBE Goal:	**0.00%**	**Current Contract Amount:**	**$ -**
DBE Goal Attained to Date:	**0.0%**	**DBE Goal Dollars:**	
DBE Payments/ Spend to Prime	**0.0%**	**Current Spend to Prime**	

Name of Subcontractor/Supplier	Type of Work/Service performed	Amount Paid This Period to Subcontractor	Date of Payment mm/dd/yyyy	Amount Paid To Date to Subcontractor
DBE Certified Firms:				
		$ -		$ -
		$ -		$ -
		$ -		$ -
		$ -		$ -
		$ -		$ -
		$ -		$ -
		$ -		$ -
	DBE Firm Totals:	$ -		$ -
SBE Firms:				
		$ -		$ -
		$ -		$ -
		$ -		$ -
		$ -		$ -
		$ -		$ -
		$ -		$ -
	SBE Firm Totals:	$ -		$ -
Non-Minority Firms:				
		$ -		$ -
		$ -		$ -
		$ -		$ -
		$ -		$ -
		$ -		$ -
		$ -		$ -
		$ -		$ -
	Non-Minority Firm Totals:	$ -		$ -

Include payments to all certified DBEs, SBE's and all Non-Minority firms during the period noted above.

If using a non-minority hauling firm that leases from DBE truck owner-operators, payments made to each owner-operator must be reported.

Any changes to the original commitments previously approved by the department must be reported to DCTA's DBELO.

For projects with assigned DBE Goals, submission of this report for periods of negative DBE activity is required. This report is required until all subcontracting or material supply activity is completed. ***This report must be submitted to DCTA each month with your monthly invoices***.

I hereby certify that the above is a true and correct statement of the amounts paid to all the firms listed above.

Signature: _____

Authorized Company Official | Date | Phone Number

The DCTA maintains the information collected through this form.

Revised June 2015

Form 4908

DENTON COUNTY TRANSPORTATION AUTHORITY
SUBCONTRACTOR FINAL REPORT

Contract No.:	**number**	**Original Contract Amount:**	**$ -**
Contractor:	**Name**	**Final Contract Amount:**	**$ -**
DBE Goal:	**0.00%**	**DBE Goal Amount:**	**$ -**
		Goal Amount Attained to Date:	**$ -**

Name of Subcontractor/Supplier	SBE, DBE, Non-Minority	Amount Paid To Subcontractor to Date
DBE Certified Firms:		
		$ -
		$ -
		$ -
		$ -
		$ -
		$ -
		$ -
	Total:	$ -
SBE Firms:		
		$ -
		$ -
		$ -
		$ -
	Total:	$ -
Non-Minority Firms:		
		$ -
		$ -
		$ -
		$ -
		$ -
		$ -
	Total:	$ -

* Include payments to all **NON-MINORITY** and certified DBEs, and SBEs.

This is to certify that 0.0% of the work was completed by DBE firms, as stated above.

IF THE GOAL WAS NOT ATTAINED, THEN ATTACH DOCUMENTATION THAT EXPLAINS THE REASONING.

Signature of General Contractor: _____ Date: _____

AFFIX NOTARY STAMP/SEAL ABOVE

Sworn to and subscribed before me, by the said _____, this the _____ day of _____, 20____, to certify which, witness my hand and seal of office.

Revised June 2015

Signature of Notary Public: _____

Printed Name of Notary Public: _____

The DCTA maintains the information collected through this form.

Revised June 2015

GOOD FAITH EFFORT FORM

If you have failed to secure DBE participation and you have subcontracting and/or supplier opportunities or if you're DBE participation is less than the DCTA's project goal, you must complete this form.

Prime Company Name (please print):	**DCTA Contract Number:**
	DCTA Contract Goal: %
Check applicable response to describe prime:	**DBE:** (yes ☐) **Certifying Entity:** (no ☐)

If the bidder's method of compliance with the DBE goal is based upon demonstration of a "good faith effort", the bidder will have the burden of correctly and accurately preparing and submitting the documentation required by the DCTA. Compliance with items 1 through 6 as it appears on the Good Faith Effort Form, in its entirety shall satisfy the good faith effort requirement upon verification by DCTA's staff and confirmation of no counterfeit information, intentional and/or knowing misrepresentation of facts or intentional discrimination by the contractor.

Failure to complete this form, in its entirety with supporting documentation, and received by the DBE Liaison, will result in the bid being considered non-responsive to bid specifications. Please list each and every subcontracting and/or supplier opportunity for the completion of this project, regardless of whether it is to be provided by a DBE or non-DBE. (DO NOT LIST NAMES OF FIRMS).

1. Please list each and every (subcontracting and/or supplier opportunity) for the completion of this project, regardless of whether it is to be provided by a DBE or non DBE (DO NOT LIST NAMES OF FIRMS). **List opportunities only**.

(Use additional sheets, if necessary)

List of Subcontracting Opportunities:	List of Supplier Opportunities:

2. Did you obtain a current (**not more than 60 days old from the initial response to the DCTA's solicitation due date)** list of DBE subcontracts and/or suppliers from the DCTA DBE Liaison?

(yes ☐) (no ☐)

DBE listing request date to the DCTA DBELO : ____ / ____ /**20**____

3. Did you solicit bids from DBE firms, within the subcontracting and/or supplier areas previously listed by mail?

(yes ☐) (no ☐)

Attach the DBE mail listing including a dated copy of the letter mailed, or email correspondence showing proof of solicitation to DBE firms. **If you did not fulfill, please write the following statement: "I did not comply"**

4. Did you solicit bids from DBE firms within the subcontracting and/or supplier areas previously listed by telephone?

(yes ☐) (no ☐)

Attach DBE contact list to include: DBE firm, person contacted, telephone number, date and time of contact. **If you did not fulfill, please write the following statement: "I did not comply"**

NOTE: A facsimile may be used to comply with either 3 or 4 but may **not** be used for both. If a facsimile is used, attach the fax confirmation, which is to provide: DBE name, date, time, fax number and documentation faxed.

NOTE: If the list of DBE firms for a particular subcontracting/supplier opportunity is ten (10) or less, the contractor must contact the entire list to be in compliance with item 3 and 4. If the list of DBE firms for a particular subcontracting/supplier opportunity is ten (10) or more, the contractor must contact at least two/thirds (2/3) of the list within such area of opportunity, but not less than ten to be in compliance with items 3 and 4.

5. Did you provide plans and specifications to potential DBE firms or information regarding the location of plans and specifications in order to assist the DBE firms?

(yes ☐) (no ☐)

6. Submit documentation if DBE firms were rejected. The documentation submitted should be in the form of an affidavit, include a detailed explanation of why the DBE firms were rejectedand any supporting documentation the contractor wishes to be considered by the DCTA. In the event of an actual dispute concerning quotes, the contractor will provide for confidential access to and inspection of any relevant documentation by DCTA Legal representative. **(Please use additional sheets, if necessary and attach)**

Company Name	Telephone	Contact Person	Scope of Work	Reason for Rejection

ADDITIONAL INFORMATION:

Please provide additional information you feel will further explain your good and honest efforts to obtain DBE participation on this project

The bidder further agrees to provide, directly to the DCTA upon request, complete and accurat information regarding actual work performed on this contract, the payment thereof and an proposed changes to the original arrangements submitted with this bid. The bidder also agrees t allow an audit and/or examination of any books, records and files held by their company that wi substantiate the actual work performed on this contract, by an authorized DCTA employee.
Any intentional and/or knowing misrepresentation of facts will be grounds for terminating the contrac or debarment from DCTA work for a period of not less than three (3) years and for initiating actio under laws concerning false statements. Any breach of contract may result in a determination of a irresponsible offeror and barred from participating in DCTA work for a period of time not less than on (1) year.

The undersigned certifies that the information provided and the listed was/were contacted in good faith. It is understood that any DBE firms listed on the Good Faith Effort Form will be contacted and the reasons for not using them will be verified by the DCTA DBELO.

Authorized Signature:	Printed Signature:
Title:	Contact Name and Title (if different):
Company Name:	Phone Number:
Street Address:	Email Address:
City/County/State and Zip Code	Date: , 2
DCTA DBELO Authorized Signature:	Date: , 20

Question and Answers for Bid #20-13 - Cummins Auto Parts Bid

Overall Bid Questions
There are no questions associated with this bid.

Solicitation 20-13

Cummins Auto Parts Bid

Bid Designation: Public

Denton County Transportation Authority

Bid 20-13
Cummins Auto Parts Bid

Bid Number	20-13
Bid Title	Cummins Auto Parts Bid
Bid Start Date	Apr 13, 2020 9:20:14 AM CDT
Bid End Date	May 1, 2020 2:00:00 PM CDT
Bid Contact	Christa Christian Senior Procurement Specialist cchristian@dcta.net
Prices Good for	**90 days**
Bid Comments	**Denton County Transportation Authority (DCTA) is accepting sealed bids for Cummins Auto Parts, as set forth in the specifications herein.**

Item Response Form

Item	**20-13-01-01** - GASKET PARTICULATE FILTER GILLIG1100
Quantity	**14 each**
Unit Price	$32.02
Delivery Location	**Denton County Transportation Authority** DCTA - Bus Operations & Maintenance 1101 Teasley Lane Denton TX 76205 **Qty** 14

Description
Gillig 2871452

Item	**20-13-01-02** - SENSOR PRESSURE DIFF EXH GILLIG1100
Quantity	**6 each**
Unit Price	$123.11
Delivery Location	**Denton County Transportation Authority** DCTA - Bus Operations & Maintenance 1101 Teasley Lane Denton TX 76205 **Qty** 6

Description
Gillig 2871960

Item	**20-13-01-03** - GASKET PARTICULATE GILLIG 1100
Quantity	**20 each**

Unit Price $12.01

Delivery Location **Denton County Transportation Authority**
DCTA - Bus Operations & Maintenance
1101 Teasley Lane
Denton TX 76205
Qty 20

Description
Gillig 2880215

Item **20-13-01-04** - OUTLET NOX SENSOR CHAMPION & EZ RIDER
Quantity **9 each**
Unit Price $479.18
Delivery Location **Denton County Transportation Authority**
DCTA - Bus Operations & Maintenance
1101 Teasley Lane
Denton TX 76205
Qty 9

Description
Champion 2894939

Item **20-13-01-05** - BELT MAIN NEW CHAMP
Quantity **11 each**
Unit Price $77.91
Delivery Location **Denton County Transportation Authority**
DCTA - Bus Operations & Maintenance
1101 Teasley Lane
Denton TX 76205
Qty 11

Description
Champion 3978280

Item **20-13-01-06** - EGR UPDATE KIT GILLIG 1100
Quantity **5 each**
Unit Price $472.26
Delivery Location **Denton County Transportation Authority**
DCTA - Bus Operations & Maintenance
1101 Teasley Lane
Denton TX 76205
Qty 5

Description
Gillig 4352363

Item **20-13-01-07** - COOLANT LOW SENSOR 16 17 GILLIG & EZ
Quantity **6 each**
Unit Price $93.49

Delivery Location **Denton County Transportation Authority**
DCTA - Bus Operations & Maintenance
1101 Teasley Lane
Denton TX 76205
Qty 6

Description
Gillig 4359193

Item **20-13-01-08** - DOSER VALVE SEAL KIT NEW CHAMP EASYRIDER
Quantity **6 each**
Unit Price $35.45
Delivery Location **Denton County Transportation Authority**
DCTA - Bus Operations & Maintenance
1101 Teasley Lane
Denton TX 76205
Qty 6

Description
Champion 4376837

Item **20-13-01-09** - GASKET AIR COMP MOUNTING NEW CHAMP
Quantity **7 each**
Unit Price $20.90
Delivery Location **Denton County Transportation Authority**
DCTA - Bus Operations & Maintenance
1101 Teasley Lane
Denton TX 76205
Qty 7

Description
Champion 4896897

Item **20-13-01-10** - GASKET EGR AIR TUBE 700 GILLIG
Quantity **14 each**
Unit Price $4.98
Delivery Location **Denton County Transportation Authority**
DCTA - Bus Operations & Maintenance
1101 Teasley Lane
Denton TX 76205
Qty 14

Description
Gillig 4932615

Item **20-13-01-11** - TURBO OIL RETURN CHAMPION
Quantity **6 each**
Unit Price $54.42
Delivery Location **Denton County Transportation Authority**
DCTA - Bus Operations & Maintenance

1101 Teasley Lane
Denton TX 76205
Qty 6

Description
Champion 4936158

Item **20-13-01-12** - DOSER VALVE DEF INJ NEWCHAMP EASY RIDER
Quantity **6 each**
Unit Price $198.67
Delivery Location **Denton County Transportation Authority**
DCTA - Bus Operations & Maintenance
1101 Teasley Lane
Denton TX 76205
Qty 6

Description
EZ Rider 2871878NX

Item **20-13-01-13** - EGR COOLER GILLIG
Quantity **5 each**
Unit Price $1,047.89
Delivery Location **Denton County Transportation Authority**
DCTA - Bus Operations & Maintenance
1101 Teasley Lane
Denton TX 76205
Qty 5

Description
Gillig 4352253RX

Item **20-13-01-14** - DEF DOSING UNIT PUMP CHAMPION
Quantity **6 each**
Unit Price $785.39
Delivery Location **Denton County Transportation Authority**
DCTA - Bus Operations & Maintenance
1101 Teasley Lane
Denton TX 76205
Qty 6

Description
Champion 4387304RX

Item **20-13-01-15** - INLET NOX SENSOR CHAMPION
Quantity **9 each**
Unit Price $354.15
Delivery Location **Denton County Transportation Authority**
DCTA - Bus Operations & Maintenance
1101 Teasley Lane
Denton TX 76205

Qty 9

Description
Champion 5293295NX

Item **20-13-01-16** - AIR COMPRESSOR CHAMPION
Quantity **8 each**
Unit Price $1,039.58
Delivery Location **Denton County Transportation Authority**
DCTA - Bus Operations & Maintenance
1101 Teasley Lane
Denton TX 76205
Qty 8

Description
Champion 5301082RX

Item **20-13-01-17** - DPF Filter
Quantity **3 each**
Unit Price $1,150.31
Delivery Location **Denton County Transportation Authority**
DCTA - Bus Operations & Maintenance
1101 Teasley Lane
Denton TX 76205
Qty 3

Description
EZ Rider 2880491

Item **20-13-01-18** - DPF Filter
Quantity **3 each**
Unit Price $1,672.26
Delivery Location **Denton County Transportation Authority**
DCTA - Bus Operations & Maintenance
1101 Teasley Lane
Denton TX 76205
Qty 3

Description
EZ Rider 2871462

Item **20-13-01-19** - DPF Filter
Quantity **6 each**
Unit Price $909.02
Delivery Location **Denton County Transportation Authority**
DCTA - Bus Operations & Maintenance
1101 Teasley Lane
Denton TX 76205
Qty 6

Description

Champion 2871571

Item **20-13-01-20** - DPF Filter
Quantity **6 each**
Unit Price $1,062.16
Delivery Location **Denton County Transportation Authority**
DCTA - Bus Operations & Maintenance
1101 Teasley Lane
Denton TX 76205
Qty 6

Description
Champion 2871462

Item **20-13-01-21** - DPF Filter
Quantity **10 each**
Unit Price $1,317.97
Delivery Location **Denton County Transportation Authority**
DCTA - Bus Operations & Maintenance
1101 Teasley Lane
Denton TX 76205
Qty 10

Description
11/16/1700s Gillig 2880589

Item **20-13-01-22** - DPF Filter
Quantity **10 each**
Unit Price $1,912.41
Delivery Location **Denton County Transportation Authority**
DCTA - Bus Operations & Maintenance
1101 Teasley Lane
Denton TX 76205
Qty 10

Description
11/16/1700s Gillig 5295605

Item **20-13-01-23** - DPF Filter
Quantity **4 each**
Unit Price $2,429.26
Delivery Location **Denton County Transportation Authority**
DCTA - Bus Operations & Maintenance
1101 Teasley Lane
Denton TX 76205
Qty 4

Description
700s Gillig 4965244

Item **20-13-01-24** - DPF Filter
Quantity **4 each**
Unit Price $2,706.26
Delivery Location **Denton County Transportation Authority**
DCTA - Bus Operations & Maintenance
1101 Teasley Lane
Denton TX 76205
Qty 4

Description
700s Gillig 5287191NX

Item **20-13-01-25** - Turbo Actuator Kit
Quantity **4 each**
Unit Price $908.68
Delivery Location **Denton County Transportation Authority**
DCTA - Bus Operations & Maintenance
1101 Teasley Lane
Denton TX 76205
Qty 4

Description
Champion 4034315RX

Item **20-13-01-26** - Turbo Kit
Quantity **4 each**
Unit Price $2,811.26
Delivery Location **Denton County Transportation Authority**
DCTA - Bus Operations & Maintenance
1101 Teasley Lane
Denton TX 76205
Qty 4

Description
Champion 5322348RX

Item **20-13-01-27** - Exhaust Bellow
Quantity **35 each**
Unit Price $371.14
Delivery Location **Denton County Transportation Authority**
DCTA - Bus Operations & Maintenance
1101 Teasley Lane
Denton TX 76205
Qty 35

Description
Champion A04-26374-012

Item **20-13-01-28** - CPR Water Outlet Tube

Quantity **4 each**

Unit Price $32.64

Delivery Location **Denton County Transportation Authority**
DCTA - Bus Operations & Maintenance
1101 Teasley Lane
Denton TX 76205
Qty 4

Description
Champion 5260938

Item **20-13-01-29** - DEF Harness

Quantity **10 each**

Unit Price $767.79

Delivery Location **Denton County Transportation Authority**
DCTA - Bus Operations & Maintenance
1101 Teasley Lane
Denton TX 76205
Qty 10

Description
Champion A06-82809-000

Item **20-13-01-30** - EGR Cooler

Quantity **20 each**

Unit Price $1,047.89

Delivery Location **Denton County Transportation Authority**
DCTA - Bus Operations & Maintenance
1101 Teasley Lane
Denton TX 76205
Qty 20

Description
Gillig 4352253RX

Item **20-13-01-31** - EGR Cooler Kit

Quantity **10 each**

Unit Price $472.26

Delivery Location **Denton County Transportation Authority**
DCTA - Bus Operations & Maintenance
1101 Teasley Lane
Denton TX 76205
Qty 10

Description
Gillig 4352363

Item **20-13-01-32** - EGR Valve Kit

Quantity **30 each**

Unit Price $578.39

Delivery Location **Denton County Transportation Authority**
DCTA - Bus Operations & Maintenance
1101 Teasley Lane
Denton TX 76205
Qty 30

Description
All except Gillig 700s 5473296RX

Item **20-13-01-33** - Fuel Pump
Quantity **5 each**
Unit Price $1,736.68
Delivery Location **Denton County Transportation Authority**
DCTA - Bus Operations & Maintenance
1101 Teasley Lane
Denton TX 76205
Qty 5

Description
Champion 5398557RX

Item **20-13-01-34** - Fuel Pump
Quantity **15 each**
Unit Price $2,325.72
Delivery Location **Denton County Transportation Authority**
DCTA - Bus Operations & Maintenance
1101 Teasley Lane
Denton TX 76205
Qty 15

Description
Gillig 4954315RX

Item **20-13-01-35** - GASKET, OIL PAN
Quantity **3 each**
Unit Price $119.52
Delivery Location **Denton County Transportation Authority**
DCTA - Bus Operations & Maintenance
1101 Teasley Lane
Denton TX 76205
Qty 3

Description
Gillig 3930408

Item **20-13-01-36** - Oil Pan
Quantity **3 each**
Unit Price $356.08
Delivery Location **Denton County Transportation Authority**

DCTA - Bus Operations & Maintenance
1101 Teasley Lane
Denton TX 76205
Qty 3

Description
Gillig 4980381

Item	**20-13-01-37** - GASKET EXHAUST ELBOW TO PIPE GILLIG
Quantity	**15 each**
Unit Price	$8.73
Delivery Location	**Denton County Transportation Authority** DCTA - Bus Operations & Maintenance 1101 Teasley Lane Denton TX 76205 **Qty** 15

Description
Gillig 2866337

Item	**20-13-01-38** - GASKET AFMDEVICE
Quantity	**40 each**
Unit Price	$18.73
Delivery Location	**Denton County Transportation Authority** DCTA - Bus Operations & Maintenance 1101 Teasley Lane Denton TX 76205 **Qty** 40

Description
Champion 2866636

DCTA

BIDDER'S QUESTIONNAIRE

1. Name of Contractor ("Business", herein)
Industrial Power LLC.
2. Doing Business As (other business name if applicable)

3. Federal Tax ID Number
75-2682135
4. Business Mailing Address (include City/State/Zip Code)
712 N. Beach st, FTW, TX 76111
5. Business Email Address
Baileyb@IPtruck.com
6. Business Telephone
817-834-7413
Business Fax Number
972-632-8735
7. Business Type
LLC
8. Number of Years in Business
37
9. Annual Gross Revenue for the past three years (M = Millions)
☐ $1M or Less ☐ $1M-$5M ☐ $5M-$10M
☐ $10M-$16M ☒ $16M+
10. Number of Employees
☐ 100 or Less ☒ 101-500 ☐ 501-750
☐ 751-1,000 ☐ 1,001+
11. Is Business a DBE Firm?
☐ Yes ☒ No
12. Is Business Owned by Minority Ethnicity?
☐ Yes ☒ No
13. Ethnic Group
Black American
Hispanic American
Native American
Other
Subcontinent Asian American
White/Caucasian
Asian Pacific American
14. Woman Owned?
☐ Yes ☒ No
15. Veteran Owned
☐ Yes ☒ No
16. Type of Work Performed
☐ Manufacturing ☐ Professional Service

19. Is any litigation pending against the Business?
☐ Yes ☒ No
20. Has the Business been debarred, suspended, proposed for debarment, and declared ineligible, voluntarily excluded or otherwise disqualified from bidding, proposing or contracting?
☐ Yes ☒ No
21. Has the Business ever been a defaulter, as principal, surety or otherwise?
☐ Yes ☒ No
22. Has the government or other public entity requested or required enforcement of any of its rights under a surety agreement on the basis of a default or in lieu of declaring the Business in default?
☐ Yes ☒ No
23. Is the Business in arrears upon a contract or debt?
☐ Yes ☒ No
24. Are there any proceedings pending relating to the Business' responsibility, debarment, suspension, voluntary exclusion or qualification to receive a public contract?
☐ Yes ☒ No
25. Have liquidated damages or penalty provisions been assessed against the Business for failure to complete the work on time or for any other reason?
☐ Yes ☒ No
26. If a "yes" response is given to questions 17-25, please provide a detailed explanation including dates, references to contract information, contacts, etc. (attach additional pages as necessary).
DCTA reserves the right to inquire further with respect thereto

27. List the name and business address of each person or each entity which has a 10% or more ownership or control interest in the Business (attach additional pages as necessary).
Robert O'Neil - 712 N. Beach st, FTW, TX 76111
Brian O'Neil - 436 Power House st, McKinney, Tx 75071

I, individually and on behalf of the business named above, do by my signature below certify that the information provided in this questionnaire is true and correct. I understand that if the information provided herein contains any false statements or any misrepresentations: 1) DCTA will have the grounds to terminate any or all contracts which DCTA has or may have with the business; 2) DCTA may disqualify the business named above from consideration for contracts and/or 3) DCTA may have grounds for initiating legal action under federal, state or local law. ***Note: This questionnaire is also a certification form; the information requested will be used to determine small business status as per 13 CFR Part 121. Additionally, this information will allow DCTA to report the amount of subcontracting activity for DCTA.***

Bailey Bible
Printed Name
Account Manager
Title
Bailey Bible

☐ Retail ☒ General/Technical Service

17. Has the Business, or any officer or partner thereof, failed to complete a contract?

☐ Yes ☒ No

18. Has the Bubsiness ever been declared "Not Responsible

☐ Yes ☒ No

Signature of owner

04/29/2020
Date

BaileyBo@IPTruck.com
Email Address

(Owner, CEO, President, Majority Stockholder or Designated Representative) Questions about this document should be directed to the Procurement Manager

BUY AMERICA CERTIFICATION
(STEEL OR MANUFACTURED PRODUCTS)
[61 FR 6302, Feb. 16, 1996, as amended at 74 FR 30239,
June 25, 2009]

General Requirement (as stated in 49 CFR 661.5)

(a) Except as provided in 49 CFR 661.7 and 49 CFR 661.11, no funds may be obligated by FTA for a grantee project unless all iron, steel, and manufactured products used in the project are produced in the United States.

(b) All steel and iron manufacturing processes must take place in the United States, except metallurgical processes involving refinement of steel additives.

(c) The steel and iron requirements apply to all construction materials made primarily of steel or iron and used in infrastructure projects such as, transit or maintenance facilities, rail lines, and bridges. These items include, but are not limited to, structural steel or iron, steel or iron beams and columns, running rail and contact rail. These requirements do not apply to steel or iron used as components or subcomponents of other manufactured products or rolling stock, or to bimetallic power rail incorporating steel or iron components.

(d) For a manufactured product to be considered produced in the United States:

(1) All of the manufacturing processes for the product must take place in the United States; and

(2) All of the components of the product must be of U.S. origin. A component is considered of U.S. origin if it is manufactured in the United States, regardless of the origin of its subcomponents.

If steel, iron, or manufactured products (as defined in 49 CFR 661.3 and 661.5) are being procured, the appropriate certificate as set forth below shall be completed and submitted by each bidder or offeror in accordance with the requirement contained in 49 CFR 661.13(b).

Certificate of Compliance with Buy America Requirements.
The bidder or offeror hereby certifies that it will comply with the requirements of 49 U.S.C. 5323(j)(1), and the applicable regulations in 49 CFR part 661.

Company Industrial Power LLC.

Name	Bailey Bible	Title	Account Manager
Signature	Bailey Bible	Date	04/29/2020

Certificate of Non-Compliance with Buy America Steel or Manufactured Products Requirements The bidder or offeror hereby certifies that it cannot comply with the requirements of 49 U.S.C. 5323(j), but it may qualify for an exception to the requirement pursuant to 49 U.S.C. 5323(j)(2), as amended, and the applicable regulations in 49 C.F.R. 661.7.

Company

Name		Title	
Signature		Date	

Instructions for Certification: By signing and submitting this bid or proposal, the prospective lower tier participant is providing the signed certification set out below.

(1) It will comply and facilitate compliance with U.S. DOT regulations, "Non-procurement Suspension and Debarment," 2 CFR part 1200, which adopts and supplements the U.S. Office of Management and Budget (U.S. OMB) "Guidelines to Agencies on Government-wide Debarment and Suspension (Non-procurement)," 2 CFR part 180,

(2) To the best of its knowledge and belief, that its Principals and Subrecipients at the first tier:

a. Are eligible to participate in covered transactions of any Federal department or agency and are not presently:

(1) Debarred,
(2) Suspended,
(3) Proposed for debarment,
(4) Declared ineligible,
(5) Voluntarily excluded, or
(6) Disqualified,

b. Its management has not within a three-year period preceding its latest application or proposal been convicted of or had a civil judgment rendered against any of them for:

(1) Commission of fraud or a criminal offense in connection with obtaining, attempting to obtain, or performing a public (Federal, State, or local) transaction, or contract under a public transaction,
(2) Violation of any Federal or State antitrust statute, or
(3) Commission of embezzlement, theft, forgery, bribery, falsification or destruction of records, making any false statement, or receiving stolen property,

c. It is not presently indicted for, or otherwise criminally or civilly charged by a governmental entity (Federal, State, or local) with commission of any of the offenses listed in the preceding subsection 2.b of this Certification,

d. It has not had one or more public transactions (Federal, State, or local) terminated for cause or default within a three-year period preceding this Certification,

e. If, at a later time, it receives any information that contradicts the statements of subsections 2.a – 2.d above, it will promptly provide that information to FTA,

f. It will treat each lower tier contract or lower tier subcontract under its Project as a covered lower tier contract for purposes of 2 CFR part 1200 and 2 CFR part 180 if it:

(1) Equals or exceeds $25,000,
(2) Is for audit services, or
(3) Requires the consent of a Federal official, and

g. It will require that each covered lower tier contractor and subcontractor:
(1) Comply and facilitate compliance with the Federal requirements of 2 CFR parts 180 and 1200, and
(2) Assure that each lower tier participant in its Project is not presently declared by any Federal department or agency to be:

a. Debarred from participation in its federally funded Project,
b. Suspended from participation in its federally funded Project,
c. Proposed for debarment from participation in its federally funded Project,
d. Declared ineligible to participate in its federally funded Project,
e. Voluntarily excluded from participation in its federally funded Project, or
f. Disqualified from participation in its federally funded Project, and

3. It will provide a written explanation as indicated on a page attached in FTA's TEAM-Web or the Signature Page if it or any of its principals, including any of its first tier Subrecipients or its Third Party Participants at a lower tier, is unable to certify compliance with the preceding statements in this Certification Group.

Certification

Contractor | Industrial Power LLC

Name and Title of Contractor's Authorized Official | Bailey Bible - Account manager

Signature | Bailey Bible Date | 04/29/2020

Denton County
Transportation Authority

N/A

CONFLICT OF INTEREST QUESTIONNAIRE

FORM CIQ

For vendor or other person doing business with local governmental entity

This questionnaire is being filed in accordance with chapter 176 of the Local Government Code by a person doing business with the governmental entity.

OFFICE USE ONLY

Date Received

By law this questionnaire must be filed with the records administrator of the local government not later than the 7th business day after the date the person becomes aware of facts that require the statement to be filed. *See* Section 176.006, Local Government Code.

A person commits an offense if the person violates Section 176.006, Local Government Code. An offense under this section is a Class C misdemeanor.

1 Name of person doing business with local governmental entity.

2 ☐ **Check this box if you are filing an update to a previously filed questionnaire.**

(The law requires that you file an updated completed questionnaire with the appropriate filing authority not later than September 1 of the year for which an activity described in Section 176.006(a), Local Government Code, is pending and not later than the 7th business day after the date the originally filed questionnaire becomes incomplete or inaccurate.)

3 Describe each affiliation or business relationship with an employee or contractor of the local governmental entity who makes recommendations to a local government officer of the local governmental entity with respect to expenditure of money.

4 Describe each affiliation or business relationship with a person who is a local government office and who appoints or employs a local government officer of the local governmental entity that is the subject of this questionnaire.

N/A

CONFLICT OF INTEREST QUESTIONNAIRE

FORM CIQ

For vendor or other person doing business with local governmental entity

Page 2

5 **Name of local government officer with whom filer has affiliation or business relationship. (Complete this section only if the answer to A, B, or C is YES.)**

This section, item 5 including subparts A, B, C &D, must be completed for each officer with whom the filer has affiliation or business relationship. Attach additional pages to this Form CIQ as necessary.

A. Is the Local government officer named in this section receiving or likely to receive taxable income from the filer of the questionnaire?

☐ YES ☐ NO

B. Is the filer of the questionnaire receiving or likely to receive taxable income from or at the direction of the local government officer named in this section AND the taxable income is not from the local governmental entity?

☐ YES ☐ NO

C. Is the filer of this questionnaire affiliated with a corporation or other business entity that the local government officer serves as an officer or director, or holds an ownership of 10 percent or more?

☐ YES ☐ NO

D. Describe each affiliation or business relationship.

6 **Describe any other affiliation or business relationship that might cause a conflict of interest.**

7

Signature of person doing business with the governmental entity

Date

CERTIFICATION AND RESTRICTIONS ON LOBBYING

I , Brian O'Neil-Vice President and Co-Owner hereby certify
(Name and title of official)
On behalf of that: Bailey Bible / Industrial Power LLC.
(Name of Bidder / Company Name)

- No federal appropriated funds have been paid or will be paid, by or on behalf of the undersigned, to any person for influencing or attempting to influence an officer or employee of any agency, a Member of Congress, and officer or employee of Congress, or an employee of a Member of Congress in connection with the awarding of any federal contract, the making of any federal grant, the making of any federal loan, the entering into of any cooperative agreement, and the extension, continuation, renewal, amendment, or modification of any federal contract, grant, loan, or cooperative agreement.

- If any funds other than federal appropriated funds have been paid or will be paid to any person influencing or attempting to influence an officer or employee of any agency, a Member of Congress, and officer or employee of Congress, or an employee of a Member of Congress in connection with the federal contract, grant, loan, or cooperative agreement, the undersigned shall complete and submit Standard Form – , "Disclosure Form to Report Lobbying," in accordance with its instructions.

- The undersigned shall require that the language of this certification be included in the award documents for all sub-awards at all tiers (including sub-contracts, sub- grants and contracts under grants, loans, and cooperative agreements) and that all sub-recipients shall certify and disclose accordingly.

This certification is a material representation of fact upon which reliance was placed when this transaction was made or entered into. Submission of this certification is a prerequisite for making or entering into this transaction imposed by 31 U.S.C. § 1352 (as amended by the Lobbying Disclosure Act of 1995). Any person who fails to file the required certification shall be subject to a civil penalty of not less than $10,000 and not more than $100,000 for each such failure.

The undersigned certifies or affirms the truthfulness and accuracy of the contents of the statements submitted on or with this certification and understands that the provisions of 31 U.S.C. Section 3801, et seq., are applicable thereto.

Name of Bidder / Company Name Bailey Bible / Industrial Power LLC.

Type or print name Brian O'Neil

Signature of Authorized Representative Brian O'Neil

Date 04/29/20

Signature of Notary and SEAL

NOTARY PUBLIC STATE OF TEXAS
Marjorie Ann Sims
My Commission Expires
03/30/2024
ID No. 128938667

NON-COLLUSION AFFIDAVIT

This affidavit must be completed and submitted with the bid/proposal

The authorized representative for bidder / proposer, Bailey Bible , being first duly sworn, deposes and says that he or she is of the party making the foregoing bid, that the bid is not made in the interest of, or on behalf of, any undisclosed person, partnership, company, association, organization, or corporation; that the bid is genuine and not collusive or sham; that the bidder has not directly or indirectly induced or solicited any other bidder to put in a false or sham bid, and has not directly or indirectly colluded, conspired, connived, or agreed with any bidder or anyone else to put in a sham bid, or that anyone shall refrain from bidding; that the bidder has not in any manner, directly or indirectly, sought by agreement, communication, or conference with anyone to fix the bid price of the bidder or any other bidder, or to fix any overhead, profit, or cost element of the bid price, or of that of any other bidder, or to secure any advantage against the public body awarding the contract of anyone interested in the proposed contract; that all statements contained in the bid are true; and, further, that the bidder has not, directly or indirectly, submitted his or her bid price or any breakdown thereof, or the contents thereof, or divulged information or data relative thereto, or paid, and will not pay, any fee to any corporation, partnership, company, association, organization, bid depository, or to any member or agent thereof to effectuate a collusive or sham bid.

Bailey Bible
Signature of Authorized Company Representative

Bailey Bible- Account Manager
Name and Title of Authorized Company Representative

04/29/2020
Date

Subscribed and sworn to before me on 04/29/2020 (Date)

NOTARY PUBLIC STATE OF TEXAS
Marjorie Ann Sims
My Commission Expires
03/30/2024
ID No. 128938667

(Notary Seal) Signature Notary Public

Prohibition of Contracts with Companies Boycotting Israel

This form must be completed and submitted with the bid/proposal

House Bill 89, effective September 1, 2017, amended the Texas Government Code to add Chapter 2270, Prohibition of Contracts with Companies Boycotting Israel.

Effective September 1, 2017, a state agency and a political subdivision (which includes a transportation authority) may not enter a contract with a company for goods or services unless the contract contains a written verification from the company that; (i) it does not Boycott Israel; and (ii) will not Boycott Israel during the term of the contract.

"Boycott Israel" is defined to mean refusing to deal with, terminating business activities with, or otherwise taking any action that is intended to penalize, inflict economic harm on, or limit commercial relations specifically with Israel, or with a person or entity doing business in Israel or in an Israeli-controlled territory, but does not include an action made for ordinary business purposes.

"Company" is defined to mean a for-profit sole proprietorship, organization, association, corporation, partnership, joint venture, limited partnership, limited liability partnership, or limited liability company, including a wholly owned subsidiary, majority-owned subsidiary, parent company, or affiliate of those entities or business associations that exists to make a profit.

"I, Bailey Bible (Name of certifying official), the Account Manager (title or position of certifying official) of Industrial Power LLC. (name of company), verifies that (i) it does not Boycott Israel; and (ii) will not Boycott Israel during the term of the Contract. This section does not apply if the Company is a sole proprietor, a non-profit entity or a governmental entity; and only applies if: (i) the Company has ten (10) or more fulltime employees and (ii) this Contract has a value of $100,000.00 or more to be paid under the terms of this Contract.

Bailey Bible
Signature of Certifying Official Title:

Title: Account Manager

Date: 04/29/2020

DCTA

SOLICITATION OVERVIEW AND ENDORSEMENT

SOLICITATION TYPE/No.	Request for Bids (RFB) 20-13
TITLE	Cummins Auto Parts
PROCUREMENT SCHEDULE	Dates and times are subject to change, any changes will be issued by addenda.
PRE BID/PROPOSAL MEETING DATE	N/A
PRE BID/PROPOSAL MEETING LOCATION	
QUESTIONS DUE	4/20/20 by 5:00 pm CST
RESPONSES TO QUESTIONS RELEASED	4/23/20 by 5:00 pm CST
DUE DATE/TIME	**May 1, 2020 at 2:00 pm CST**
QUESTIONS/ CLARIFICATIONS	All requests for clarifications and questions shall be submitted in writing. No verbal questions will be accepted and no verbal replies will be provided. Bidders/Proposers must submit requests for changes to or approval of equals, clarifications and modifications of the specifications in writing. The solicitation documents can only be modified in writing. Procurement must receive the requests no later than the date indicated above. Procurement will issue a response to those requests to all bidders/proposers by posting the replies to BidSync no later than the date indicated above. DCTA assumes no responsibility for delayed or lost responses
ALL QUESTIONS AND REQUESTS FOR CLARIFICATIONS SHALL BE SENT TO	**Christa Christian, CPPB** procurement@dcta.net **or submitted via BidSync at www.bidsync.com**
RECEIPT OF BID/PROPOSAL	**Prior to the time and date indicated above, all proposal packages must be hand delivered, electronically submitted or mailed to Procurement at:** **DCTA** 1955 Lakeway Drive, Suite 260 ATTN: Christa Christian, CPPB SOLICITATION #20-13 Lewisville, Texas 75057 **Proposal packages received after the due time and date shall not be considered and will be returned unopened.** All bids/proposals shall be submitted in a sealed package with the company name and RFB/RFP number clearly marked on the outside. The clock in the reception area of DCTA is the official time for receipt of bids. Bids/Proposals submitted to other DCTA locations may be returned unopened and will not be considered in the award of the contract. DCTA reserves the right to change the deadline for submitting bids/proposals. Further, DCTA reserves the right to unilaterally revise or amend the scope of services up to the time set for submitting bids/proposals. Such revisions and addenda, if any, shall be announced by addenda to this solicitation. Copies of such addenda shall be furnished to all prospective bidders/proposers.
ACCEPTANCE PERIOD	**PROPOSALS SHALL REMAIN VALID FOR 90 DAYS FROM THE DUE DATE**
DBE (DISADVANTAGED BUSINESS ENTERPRISE) PROGRAM	It is the policy of DCTA to create a level playing field on which DBEs, as defined in 49 CFR Part 26, can compete fairly for DOT-assisted contracts. Additionally, DCTA is committed to removing barriers to the participation of DBEs on DOT-assisted contracts. The DBE requirements of 49 CFR Part 26 applies to this procurement. By submitting its bid/proposal, Bidder/Proposer certifies that it will take all necessary and reasonable steps in accordance with 49 CFR Part 26 to ensure that DBEs are given the maximum opportunity to compete for and participate in the performance of this contract. Bidder/Proposer further certifies and agrees that it has not and will not discriminate on the basis of race, color, national origin, or sex in the award of subcontracts under this contract or in performance of this contract. DCTA's DBE Program is available at www.dcta.net
DBE GOAL	☐yes ☒no **DBE goal %**
DAVIS-BACON AND COPELAND ANTI-KICKBACK	The Davis-Bacon and Copeland Acts are codified at 40 USC 3141, et seq. and 18 USC 874. The Acts apply to grantee construction contracts and subcontracts that "at least partly are financed by a loan or grant from the Federal Government." 40 USC 3145(a), 29 CFR 5.2(h), 49 CFR 18.36(i) (5).The Acts apply to any construction contract over $2,000. 40 USC 3142(a), 29 CFR 5.5(a). 'Construction,' for purposes of the Acts, includes "actual construction, alteration and/or repair, including painting and decorating of public buildings and public works of the Government." 29 CFR 5.5(a).
CERTIFIED PAYROLL	☐yes ☒no **Wage Rate**

BID/PROPOSAL ENDORSEMENT

TO BE COMPLETED FOR HAND DELIVERED AND MAILED RESPONSES ONLY

BUSINESS NAME	Industrial Power LLC.		
CONTACT NAME	Bailey Bible	TITLE	Municipality Account Manager
TELEPHONE	214·277·1590	EMAIL	Bailey5@IPtruck.com
ADDRESS	712 North Beach St. Fort Worth, TX 76111		
SIGNATURE	Bailey Bible	**DATE**	04/29/2020

SCOPE OF WORK, TERMS AND CONDITIONS

1. CONTRACT

Submission of a bid constitutes an offer to perform the work specified and to be bound by the terms contained or referenced herein. Upon acceptance of the offer, and upon award of the Contract to the successful offeror (if any), this procurement solicitation document (entitled "Request for Bid") together with the completed and executed forms required herein, and all attachments hereto, together with the contract shall collectively constitute the Contract documents.

2. CONTRACT TERM

The term of the contract shall commence on June 1, 2020 through and including September 30, 2021.

3. PRICING AND ADJUSTMENTS

Pricing provided in the Bid by the vendor must remain constant for the duration of the contract, and all prices must be rounded to the nearest cent. All charges, surcharges, fees, and all costs associated with shipping must be reflected in the price. DCTA will not pay charges that are not stipulated in our contracts.

4. PRODUCTS AND SCOPE OF SERVICES

Items furnished under this pricing agreement shall conform to the manufacturer's specifications and shall perform the functions for which they were designed and manufactured. Bids must be brand name or equal items.

A. PRODUCT SUBSTITUTION

Item substitutes must be authorized and must be billed at contracted price. Substitute items must be equal to or greater.

A. CAPACITY

Vendor must prove beyond any doubt to DCTA that they are duly qualified, and capable to fulfill and abide by the specifications herein listed.

B. CORE EXCHANGE/CHARGES

All parts supplied which require core exchange shall be monitored by the Contractor(s) to ensure proper cores are returned to the Contractor(s). Core credit is to be issued within 30 days of receipt. Any core that is not usable or not returned shall be billed at the core price specified in this bid for that particular part.

C. ESTIMATED QUANTITIES

The estimated quantity to be purchased may be more or less. DCTA is not obligated to purchase any minimum amount and may purchase any reasonable amount greater than the estimate for the same unit price. Any limit on quantities available must be stated expressly in the proposal. DCTA will order on an as needed basis.

D. MINIMUM ORDER

There is no minimum order on this contract.

E. RETAIL SALES ESTABLISHMENTS

Retail Sales Establishments are defined as any facilities that the Contractor(s) uses on a regular basis to warehouse and/or sell merchandise, and at which the Contractor(s) conducts regular business transactions at either the retail or wholesale level.

Contractor(s) facility should provide:

- Walk-In and will-call order system during regular work hours.
- Customer service associate to support walk-in and will-call order system.
- Itemized sales receipts for all walk-in and will-call transactions.
- Availability of delivery.

F. ORDERING METHODS

Contractor(s) shall accept, the following ordering methods:

- Telephone
- Electronic (email)
- Over the counter/walk-in
- Online (internet)
- US Mail

Phone Orders – Contractor(s) will accept orders via telephone as part of this contract. Telephone orders must be accepted between the hours of 7:00 AM and 7:00 PM Central Standard Time (CST), Monday through Friday.

Electronic (email) Orders – Contractor(s) will accept orders via email as part of this contract. An email address to be used by ordering agencies for placing orders is to be in place before the commencement of this contract.

Walk-in Orders - see Retail Sales Establishments above

Internet/Web Orders – Contractor(s) will accept orders via internet/web as part of this contract. Web address to be used by ordering agencies for placing orders is to be in place before the commencement of this contract. Internet/web access must be 24 hours but orders must be accepted by the Contractor(s) between the hours of 7:00 AM and 7:00 PM Central Standard Time (CST), Monday through Friday.

G. ORDERING CONTACT

Contractor(s) shall provide the following ordering information to be used by DCTA:

- Email address
- Toll free phone number
- Toll free fax number
- Mailing address

H. ORDER ACKNOWLEDGEMENT

The Contractor(s) will provide DCTA with an order receipt acknowledgment via email or facsimile within one business day after receipt of an order. The acknowledgement will include:

- Purchase Order Number
- Description of goods and/or related products purchased
- Total Cost
- Delivery Date
- Identification of any Out of Stock Items

I. OUT-OF-STOCK REMEDY

In the event of an out-of-stock item, DCTA shall have the option to either request backorder or cancel the item from order, upon receipt of order acknowledgement identifying that said items are unavailable. Under no circumstances is the Contractor(s) permitted to make unauthorized substitutions or cancellations.

J. RE-MANUFACTURED PARTS

The Contractor(s) may provide remanufactured parts when new parts are not available and with authorization of DCTA. Used, previously installed or shop-worn parts shall not be accepted.

K. FREIGHT / DELIVERY CHARGES

Shall be included in the bid price. No additional fees for delivery or freight shall be paid by DCTA.

L. DELIVERY SCHEDULES

The Contractor(s) will deliver product within the one (1) allotted business days per the contract requirement, unless otherwise agreed to by DCTA. Delivery hours for DCTA are between the hours of 7:00 AM and 7:00 PM Central Standard Time (CST), Monday through Friday. Contractor(s) must notify DCTA within 12 hours of scheduled delivery time, if delivery cannot be made within the time frame specified in the contract.

M. DELIVERY FROM COMMERCIAL OUTLETS

Delivery of standard in-stock items from Contractor's local commercial store shall be accomplished within two hours. Delivery for non-standard, special order items will be accomplished by a scheduled delivery.

N. OVER THE COUNTER DELIVERY

Contractor(s) shall provide over the counter order and delivery at all of its commercial locations.

O. FREE ON BOARD (F.O.B.) DESTINATION (SHIPPING TERMS)

All prices offered shall be F.O.B. destination. Responsibility and liability for loss or damage for all orders shall remain with the Contractor(s) until final inspection and acceptance, when all responsibility shall pass to DCTA, except the responsibility for latent defects, fraud, and the warranty obligations. All emergency or rush deliveries that require special shipping and handling should be at DCTA's expense, with prior approval. Emergency or rush shipping charges shall be added to an invoice as a separate line item. In the event an emergency or rush delivery is required as the result of a Contractor(s)'s error; all shipping cost shall be paid by the Contractor(s).

P. SHIPPING REQUIREMENTS

The Vendor shall take necessary actions to assure that orders are shipped promptly, to include partial shipments where appropriate. Vendor will package goods in accordance with good commercial practice. Each shipping container shall be clearly and permanently marked as follows:

A. Vendor's name and address;

B. DCTA's purchase order number;

C. Container number and total number of containers, e.g. box 1 of 4 boxes; and

D. The number of the container bearing the packing slip (must accompany all goods delivered).

The packing slip (or shipping ticket) must state clearly purchase order number, packing slip number, number of items, stock number, destination of delivery and delivery date. Vendor shall bear cost of packaging unless otherwise provided.

Q. MANUFACTURER WARRANTY

The Contractor(s) agrees to honor all manufacturers' warranties and guarantees on all products offered as part of the Agreement. The Contractor(s) understands that if warranty extends beyond the term of the Contract, the Contractor(s) must agree to provide warranty services throughout the life of the warranty. These parts must be warranted to be free of defective parts and workmanship, provided they are properly installed on the vehicle for which they were intended, for the time and mileage shown in the product literature or catalog. Statement of warranty is to be provided by Contractor(s) with items delivered under this Agreement. For all items ordered, warranty begins on the date of delivery.

R. RETURN POLICY

Items purchased under this contract may be returned at no cost for a full refund if item is unused, in its original packaging and within thirty (30) calendar days of its delivery. Contractor(s) shall be responsible for picking up all returns within seven (7) working days of advance, written notification to include email and fax.

S. CREDIT POLICY

Contractor(s) will be responsible for the credit or replacement of all products, including those covered by manufacturer warranties. Contractor(s) shall provide credit for the following items:

- Items shipped in error
- Items that are returned within 30 calendar days of delivery
- Defective or freight-damaged items

The Contractor(s) cannot require DCTA to deal directly with the manufacturer. In all cases, DCTA shall have the option of taking an exchange or receiving a credit.

T. RESTOCKING FEES

Contractor(s) will not impose a restocking fee on the Purchasing Entity under this Agreement for the following:

- Item(s) returned that were damaged upon receipt
- Incorrect items shipped

- Items that are returned unopened in an original packaging
- Items that are returned, but exchanged for another item

U. PRODUCT RECALL PROCEDURES

The Contractor(s) shall provide recall notification, regardless of level, in writing to DCTA. Contractor(s) agrees to use commercially reasonable efforts in identifying the applicable manufacturer in order that DCTA may work with such manufacturer to handle any applicable recall issues.

V. INVOICING

1. The Contractor(s)'s invoice must identify, at a minimum, the information listed below:
2. Contract Number
3. DCTA's Purchase Order Number
4. Delivery Address of the order
5. Product(s) description
6. Manufacturer's product number
7. Quantities issued
8. Price per unit(s) and extended price(s)
9. Date ordered
10. Date delivered
11. Listing of returns or backorders

Failure to submit invoices to accounts payable can result in a delay in payment.

W. CONTRACT USAGE REPORT

CONTRACTOR(S) will track sales for DCTA through a Point of Sale system in order to supply quarterly reporting that will include DCTA, Spend, Invoice Number, Purchase Order Date, Contract Line Item Number, Manufacturer, Manufacturer Part Number, SKU#, Item Description, Unit of Measure, Quantity in Unit of Measure, Quantity, Contract Unit Price, Extended Contract Price, and Index Date in an Excel format by the designated due date for the appropriate quarter.

X. AD HOC REPORTING

The Contractor(s) shall have the ability to provide ad hoc reports at no cost.

Y. INDEFINITE QUANTITY CONTRACT

This is an indefinite delivery indefinite quantity contract

Z. CERTIFICATION OF SPECIFICATIONS COMPLIANCE

Contractor(s) certifies all products proposed in the bid meet or exceed all requirements of this specification as set forth in the request.

AA. SAMPLES / DEMOS

When requested, samples/demos shall be furnished to the Authority at no expense.

BB. DESCRIPTIVE LITERATURE

If bidding and equal, bidder is requested to submit descriptive literature sufficient in detail to enable an intelligent comparison of the specification of the product(s) bid. Failure to provide literature with this Request for Bid may result in rejection of the bid or that part of the bid.

CC. TECHNICAL INFORMATION

All bidders shall furnish technical information, bulletins and/or product identification specifications for each item bid. Material Safety Data Sheets and any required warnings regarding the safe use of the product(s) shall be included with bid.

DD. DCTA SERVICE/DELIVERY LOCATIONS:

The locations include, but are not limited to, the following:

Bus Operations and Maintenance

1101 Teasley Lane

Denton, TX 76205

DCTA reserves the right to add, delete or change delivery locations during the term of the contract.

EE. DELIVERY RESPONSIBILITY

DCTA will not be responsible for any material being delivered or services performed without a purchase order, signed by an authorized representative of DCTA.

FF. SHIPPING REQUIREMENTS

The Vendor shall take necessary actions to assure that orders are shipped promptly, to include partial shipments where appropriate. Vendor will package goods in accordance with good commercial practice. Each shipping container shall be clearly and permanently marked as follows:

A. Vendor's name and address;

B. DCTA's purchase order number;

C. Container number and total number of containers, e.g. box 1 of 4 boxes; and

D. The number of the container bearing the packing slip (must accompany all goods

E. delivered).

The packing slip (or shipping ticket) must state clearly purchase order number, packing slip number, number of items, stock number, destination of delivery and delivery date. Vendor shall bear cost of packaging unless otherwise provided.

GG. MANUFACTURER WARRANTY

The Contractor(s) agrees to honor all manufacturers' warranties and guarantees on all products offered as part of the Agreement. The Contractor(s) understands that if warranty extends beyond the term of the Contract, the Contractor(s) must agree to provide warranty services throughout the life of the warranty. These parts must be warranted to be free of defective parts and workmanship, provided they are properly installed on the vehicle for which they were intended, for the time and mileage shown in the product literature or catalog. Statement of warranty is to be provided by Contractor(s) with items delivered under this Agreement. For all items ordered, warranty begins on the date of delivery.

GENERAL TERMS AND CONDITIONS

1. CANCELLATION

The DCTA reserves the right to cancel this RFB or cancel the award of this contract at any time before execution of the contract by both parties if cancellation is deemed to be in DCTA's best interest. In no event shall the DCTA have any liability for the cancellation of award. The Bidder assumes the sole risk and responsibility for all expenses connected with the preparation of its bid.

2. EVALUATION AND AWARD OF CONTRACT

The Owner reserves the right to reject any and all bids, cancel and reissue the solicitation, waive any and all informalities except for the time of submission of the Bid and to negotiate contract terms with the Successful Bidder. The Owner also reserves the right to reject all nonconforming, non-responsive, unbalanced or conditional Bids. Also, the Owner reserves the right to reject the Bid of any Bidder if the Owner believes that it would not be in the best interest of the Project to make an award to that Bidder, whether because the Bid is not responsive or the Bidder is unqualified or has doubtful financial ability or fails to meet any other pertinent standard or criteria established by the Owner. Discrepancies in the multiplication of units of Work and unit prices will be resolved in favor of the unit prices. Discrepancies between the indicated sum of any column of figures and the correct sum thereof will be resolved in favor of the correct sum.

In evaluating Bids, the owner will consider the qualifications of the Bidders, whether or not the Bids comply with the prescribed requirements, unit prices, completion time, and other data, as may be requested in the Bid form or prior to the Notice of Award.

Because bids and offers can at times be ambiguous, DCTA reserves the right to request additional information before making an award. DCTA also reserves the right to seek clarification from any bidder or offeror about any statement in its bid that DCTA finds ambiguous.

The Owner may consider the qualifications and experience of any Subcontractors, Suppliers, or other persons or organizations proposed for those portions of the Work as to which the identity of Subcontractors, Suppliers, and other persons and organizations must be submitted as requested by the Owner.

The Owner may consider its past experience with the Bidder and any Subcontractors, Suppliers or other persons or organizations proposed to perform any portions of the Work, and the Owner reserves the right to reject any and all bids from persons or organizations with whom the Owner has previously experienced problems including but not limited to issues relating to performance, workmanship, and disputes or litigation.

The Owner may conduct such investigations as the owner deems necessary to assist in the evaluation of any Bid and to establish the responsibility, qualifications and financial stability of Bidders, proposed Subcontractors, Suppliers and other persons and organizations to perform and furnish the Work in accordance with the Contract Documents to the Owner's satisfaction within the prescribed time. DCTA may award the contract to responsible bidders/proposers possessing the ability to perform successfully under the terms and conditions of the procurement. Consideration will be given to such matters as bidders/proposers integrity, compliance with public policy, record of past performance, and financial and technical resources.

If contract is to be awarded, it will be awarded to the lowest responsive responsible Bidder whose bid will be in the best interests of the DCTA. DCTA will award the contract to a single supplier, affording DCTA the improved cost effectiveness as well as one stop shopping. If determined to be in the best interest of DCTA, it reserves the right to award to multiple bidders, to add and delete items and/or to order from multiple bidders.

The Procurement Manager shall recommend the bidder determined to be the lowest responsive and responsible bidder to the Denton County Transportation Authority Board of Directors. Based on the evaluation committees recommendation the DCTA Board of Directors will authorize the DCTA President to enter into a contract with the selected bidder.

3. ADDENDUM

The contents of all addendums sent to bidder are to be incorporated in the RFB documents and will become part of the contract documents.

4. PROOF OF INSURABILITY

Bidder must submit proof of insurability with their bid. Proof of insurability can be in the form of a letter from the Bidder's insurance provider stating the provider's commitment to insure the Bidder for the types of coverages and levels of coverages specified in this RFB.

5. CONFIDENTIALITY

It is in the public interest for the DCTA to receive as many bids as possible. The DCTA acknowledges the possible confidential nature of any aspect of the bid including the cost or price information requested by the Request for Bids, and the DCTA obliges itself in good faith not to disclose any page of the bid containing information which the Bidder clearly marks as confidential during the evaluation process. After contract award, disclosure of information shall be made only in accordance with Texas law and applicable Federal requirements.

6. TAXES

DCTA is tax exempt and shall furnish the successful bidder with the necessary tax exemption certificate.

7. INDEMNIFICATION

DCTA SHALL NOT BE LIABLE FOR ANY LOSS, DAMAGE, OR INJURY OF ANY KIND OR CHARACTER TO ANY PERSON OR PROPERTY ARISING FROM THE SERVICES OF THE CONTRACTOR PURSUANT TO THIS AGREEMENT. CONTRACTOR HEREBY WAIVES ALL CLAIMS AGAINST DCTA, ITS OFFICERS, AGENTS AND EMPLOYEES (COLLECTIVELY REFERRED TO IN THIS SECTION AS "DCTA") FOR DAMAGE TO ANY PROPERTY OR INJURY TO, OR DEATH OF, ANY PERSON ARISING AT ANY TIME AND FROM ANY CAUSE OTHER THAN THE NEGLIGENCE OR WILLFUL MISCONDUCT OF DCTA. CONTRACTOR AGREES TO INDEMNIFY AND SAVE HARMLESS DCTA FROM AND AGAINST ANY AND ALL LIABILITIES, DAMAGES, CLAIMS, SUITS, COSTS (INCLUDING COURT COSTS, ATTORNEYS' FEES AND COSTS OF INVESTIGATION) AND ACTIONS BY REASON OF INJURY TO OR DEATH OF ANY PERSON OR DAMAGE TO OR LOSS OF PROPERTY TO THE EXTENT CAUSED BY THE CONTRACTOR'S NEGLIGENT PERFORMANCE OF SERVICES UNDER THIS AGREEMENT OR BY REASON OF ANY ACT OR OMISSION ON THE PART OF CONTRACTOR, ITS OFFICERS, DIRECTORS, SERVANTS, AGENTS, EMPLOYEES, REPRESENTATIVES, CONTRACTORS, SUBCONTRACTORS, LICENSEES,

SUCCESSORS OR PERMITTED ASSIGNS (EXCEPT WHEN SUCH LIABILITY, CLAIMS, SUITS, COSTS, INJURIES, DEATHS OR DAMAGES ARISE FROM OR ARE ATTRIBUTED TO SOLE NEGLIGENCE OF DCTA). IF ANY ACTION OR PROCEEDING SHALL BE BROUGHT BY OR AGAINST DCTA IN CONNECTION WITH ANY SUCH LIABILITY OR CLAIM, CONTRACTOR, ON NOTICE FROM DCTA, SHALL DEFEND SUCH ACTION OR PROCEEDINGS AT CONTRACTOR'S EXPENSE, BY OR THROUGH ATTORNEYS REASONABLY SATISFACTORY TO DCTA. CONTRACTOR'S OBLIGATIONS UNDER THIS SECTION SHALL NOT BE LIMITED TO THE LIMITS OF COVERAGE OF INSURANCE MAINTAINED OR REQUIRED TO BE MAINTAINED BY CONTRACTOR UNDER THIS AGREEMENT. THIS PROVISION SHALL SURVIVE THE TERMINATION OF THIS AGREEMENT.

CONTRACTOR SHALL INDEMNIFY DCTA FOR ANY FINES AND LEGAL FEES INCURRED BECAUSE EMPLOYEES, AGENTS, OR WORKERS SUPPLIED BY CONTRACTOR ARE NOT AUTHORIZED TO WORK IN THE UNITED STATES.

8. PAYMENT

DCTA shall pay the BIDDER, upon the submission of proper invoices. Unless otherwise specified in this contract, payment shall be made within thirty (30) days of receipt of a complete and correct invoice.

Bidder's invoices for the services rendered shall be submitted to the following address.

DCTA Accounts Payable
PO Box 96
Lewisville, TX 75067
accountspayable@dcta.net

9. ASSIGNMENT

The successful bidder shall not assign, sell, transfer or convey the agreement completely or in part, without the prior written consent of DCTA.

10. VENUE

The agreement will be governed and construed according to the laws of the State of Texas; and venue for any action concerning this contract shall be in Denton County, Texas. The parties agree to submit to the personal and subject matter jurisdiction of said court.

11. INDEPENDENT CONTRACTOR

It is understood and agreed by and between the parties, that successful bidder, in satisfying conditions in this contract, is acting independently, and that DCTA assumes no responsibility or liabilities to any third party in connection with these actions. All services to be performed by successful bidder pursuant to this contract shall be in the capacity of an independent contractor, and not as an agent or employee of DCTA. Successful bidder shall supervise the performance of its

services and shall be entitled to control the manner and means by which its services are to be performed, subject to the terms of this contract.

12. PROTEST PROCEDURES

Protests relative to this procurement will be reviewed and adjudicated by DCTA in accordance with its Procurement Policy and Procedures Manual maintained in DCTA's offices in Lewisville, TX.

13. ADMINISTRATIVE REMEDIES

Denton County Transportation Authority reserves the right to accept or reject any and/or all bids, to waive any formalities and/or irregularities and to award the Contract in the best interest of the DCTA.

By submission of a bid in response to this solicitation, the Bidder agrees to exhaust its administrative remedies under DCTA's Procurement Regulations or Disputes Clause of any resulting contract prior to seeking judicial relief of any type in connection with any matter related to this solicitation, the award of any contract, and any dispute under any related contract. Protests relative to this procurement will be reviewed and adjudicated by DCTA in accordance with its Procurement Policy and Procedures Manual maintained in DCTA's offices in Lewisville, TX.

14. OPEN RECORDS

All responses submitted to DCTA become the property of DCTA and are subject to the Public Information Act (Texas Government Code Chapter 552). The interested firms/individuals should familiarize themselves with the provisions of that Act. In no event shall DCTA, or any of its agents, Representatives, consultants, directors, officers, or employees, be liable to a firm/individual for the disclosure of all or any portion of a response submitted pursuant to the RFB.

If a firm/individual has special concerns about information that it desires to make available to DCTA, but which it believes constitutes a trade secret, proprietary information or other information excepted from disclosure, such firm/individual should specifically and conspicuously designate each page of that information, which the Bidder believes, should not be disclosed outside DCTA. Disclosure of requested information will be subject to the Texas Public Information Act.

15. CONTRACT

The successful Bidder may be required to execute a contract prepared and approved by DCTA General Counsel.

16. PROHIBITION OF BOYCOTT ISREAL

Company verifies that (i) it does not Boycott Israel; and (ii) will not Boycott Israel during the term of the Contract. This section does not apply if the Company is a sole proprietor, a non-profit entity or a governmental entity; and only applies if: (i) the Company has ten (10) or more fulltime employees and (ii) this Contract has a value of $100,000.00 or more to be paid under the terms of this Contract.

17. PROHIBITION OF CONTRACTS WITH CERTAIN COMPANIES

DCTA is prohibited from entering into a contract with a company that does business with Iran, Sudan, or a foreign terrorist organization.

18. RELATIONSHIP AND WORK IN GENERAL

Contractor, an independent contractor, covenants and agrees to perform for the stated compensation, all of the services described in Scope of Work, Terms and Conditions of this

Contract. Contractor agrees to complete the work in a professional and workmanlike manner with a high degree of care to ensure the accuracy and timeliness thereof.

19. ASSIGNMENT OF PERSONNEL

Contractor agrees to assign qualified staff members including a Project Manager who shall be responsible for the task administration and work performance.

20. EMPLOYMENT OF PERSONNEL

Contractor agrees to employ, at its own expense, all personnel required in performing the services under this contract. Personnel employed by Contractor shall not be employees of, nor have any contractual relationship with DCTA. All personnel engaged in the work shall be fully qualified and shall be authorized or licensed to perform such work as required.

21. EMPLOYMENT OF VETERANS

Applicable to capital projects only-Contractor shall provide a hiring preference, to the extent practicable, to veterans (as defined in section 2108 of Title 5) who have the requisite skills and abilities to perform the construction work required under this contract. This shall not be understood, construed or enforced in any manner that would require an employer to give a preference to any veteran over any equally qualified applicant who is a member of any racial or ethnic minority, female, an individual with a disability, or a former employee.

22. USE OF SUBCONTRACTORS

The Contractor may utilize the services of specialty subcontractors on those parts of the work which, under normal contracting practices, are performed by specialty subcontractors.

No work or services under this Contract shall be subcontracted without the prior written approval of DCTA. DCTA reserves the right to reject any subcontractors proposed to be utilized on this project.

23. DBE SUBCONTRACTS

If DBE subcontractors are utilized to perform under this contract the contractor must make available to DCTA copies of all DBE subcontracts upon request. The subcontractor shall ensure that all subcontracts or agreements with the Prime to supply labor or materials require that the subcontract and all lower tier subcontracts be performed in accordance with 49 CFR Part 26.55.

24. INSPECTION OF WORK

DCTA shall have the right to review and inspect the progress of the work described herein at all times.

25. COPYRIGHT

No reports, maps, or other documents produced in whole or in part under this contract shall be the subject of an application for copyright by or on behalf of the Contractor. All reports, maps, and other documents produced under this contract shall become the property of DCTA. The Contractor shall, at its expense, defend all suits or proceedings instituted against DCTA and pay any award of damages assessed against DCTA in such suits or proceedings, insofar as the same are based on any claim that materials furnished or work performed under the contract constitutes an infringement of any patent, trade secret, copyright, or any other proprietary right.

26. PROPRIETARY RIGHTS

Contractor agrees not to release data or information about the results of the project to any person outside of DCTA without first obtaining written authorization to release such information from DCTA.

27. OWNERSHIP OF DOCUMENTS

The parties agree and understand that any and all documents produced under this Contract are the sole and exclusive property of DCTA and DCTA retains ownership of all such documentation including, but not limited to, studies, plans, specifications, intellectual property and all related documents. To the extent necessary, CONTRACTOR HEREBY ASSIGNS AND TRANSFERS ANY AND ALL COPYRIGHTS TO DCTA.

28. MAINTENANCE OF RECORDS

Bidder must maintain records to show actual time involved in performance of the Work.

29. CHANGES BY CONTRACTOR

If, during the performance of Work under the Contract, the Contractor finds it impracticable to comply strictly with the specifications, the Contractor will notify the DCTA Project Manager and Procurement Manager immediately in writing.

30. WRITTEN ACCEPTANCE BY DCTA

Any bids by Contractor that vary or add to this Contract shall be construed as additional terms or modifications and shall not become part of the Contract unless accepted in writing, by DCTA.

31. CHANGE ORDERS / CONTRACT MODIFICATIONS

All requests for changes in the work must be submitted in writing to the DCTA Project Manager. Changes shall be made only with the prior approval DCTA and only by appropriate written Change Order or Contract Modification as appropriate. The Procurement Manager may, at any time, by a written Change Order or Contract Modification, and without notice to the Surety (if any), make changes within the general scope of this Contract. If the change affects the Contractor's costs, then the Procurement Manager shall also make an equitable adjustment in the Contractor's compensation.

32. WHOLE AGREEMENTS

The Contract constitutes the whole of the agreement between the parties hereto and neither thereof has been induced to make or enter into the Contract by reason of any promise, agreement, representation, statement, or warranty other than contained herein.

33. PARTIAL INVALIDITY

If any term, provision, covenant, or condition of this agreement is held by a court of competent jurisdiction to be invalid, void, or unenforceable, the remainder of the provisions shall remain in full force and effect and shall in no way be affected, impaired, or invalidated.

34. TITLES AND HEADINGS FOR CONVENIENCE ONLY

As used throughout this Contract, titles and headings of sections are for convenience only, and shall not be used to aid in interpretation of the provisions contained herein.

35. COMPENSATION

The bidder shall be compensated for work in performance of the contract and per the agreed upon fees. The bidder shall include as part of his invoice a list of all subcontractors and the amounts to be paid to each of the subcontractors from this invoice. DCTA will require specific payment reporting criteria for all payments made to subcontractors and will provide additional information and forms upon selection as the awarded firm.

36. PROMPT PAYMENT

The prime contractor agrees to pay each subcontractor under this prime contract for satisfactory performance of its contract no later than 30 days from the receipt of each payment the prime contractor receives from the Denton County Transportation Authority. Any delay or postponement of payment from the above referenced time frame may occur only for good cause following written approval of the Denton County Transportation Authority. This clause applies to both DBE and non-DBE subcontracts and must be included in contracts between the Denton County Transportation Authority, the prime contractor, sub contracts and sub-recipients.

37. RETAINAGE

The prime contractor agrees to return retainage payments to each subcontractor within 30 days after the subcontractors work is satisfactorily completed. Any delay or postponement of payment from the above referenced time frame may occur only for good cause following written approval of the Denton County Transportation Authority. This clause applies to both DBE and non-DBE subcontracts.

38. MINORITY OWNED FINANCIAL INSTITUTIONS

In accordance with the requirements of 49 CFR Part 26, and grant agreements between DCTA and the Department of Transportation (DOT), to investigate the full extent of services offered by financial institutions owned and controlled by socially and economically disadvantaged individuals in the community, to make reasonable efforts to use these institutions, and to encourage prime contractors on DOT-assisted contract to make use of these institutions. Information regarding financial institutions may be obtained on-line from the Federal Reserve at http://www.federalreserve.gov/Releases/mob/current/default.htm

39. NON-DISCRIMINATION

The contractor, sub-recipient or subcontractor shall not discriminate on the basis of race, color, national origin, or sex in the performance of this contract. The contractor shall carry out applicable requirements of 49 CFR part 26 in the award and administration of DOT-assisted contracts. Failure by the contractor to carry out these requirements is a material breach of this contract, which may result in the termination of this contract or such other remedy as the recipient deems appropriate, which may include, but is not limited to:

(1) Withholding monthly progress payments;

(2) Assessing sanctions

(3) Liquidated damages; and/or

(4) Disqualifying the contractor from future bidding as non-responsible

40. GRATUITIES

It shall be unethical for any person to offer, give, or agree to give any DCTA officer or former DCTA officer, or for any DCTA officer or former DCTA officer to solicit, demand, accept, or agree to accept from another person, a gratuity or an offer of employment in connection with any decision, approval, disapproval, recommendation, or preparation of any part of a program requirement or a purchase request, influencing the content of any specification or procurement standard, rendering of advice, investigation, auditing, or in any other advisory capacity in any proceeding or application, request for ruling, determination, claim or controversy, or other particular matter, pertaining to any program requirement or a contract or subcontract, or to any solicitation therefore.

41. FUNDING

Funds for payment have been provided through the DCTA budget approved by the Board of Directors for this fiscal year only. State of Texas statutes prohibit the obligation and expenditure of public funds beyond the fiscal year for which a budget has been approved. Therefore, anticipated orders or other obligations that may arise past the end of the current DCTA fiscal year shall be subject to budget approval.

42. FEDERAL FUNDS

DCTA is a recipient of federal funds from the Federal Transit Authority (FTA) and as a recipient of federal funds specific clauses and certifications must be included in any contract that involves the disbursement of federal funds. If federal dollars will be utilized under this contract Bidders must adhere to the clauses and certifications if applicable. All required clauses and certifications will be included if applicable.

43. PROCUREMENT OF RECOVERED MATERIALS

If federal dollars are utilized for this project all contractors must comply with section 6002 of the Solid Waste Disposal Act, as amended by the Resource Conservation and Recovery Act.

44. SILENCE OF SPECIFICATIONS

The apparent silence of the specifications as to any detail or to the apparent omission from it of a detailed description concerning any point, shall be regarded as meaning that only the best commercial practices are to prevail. All interpretations of these specifications shall be made on the basis of this statement.

INSURANCE REQUIREMENTS

Bidders performing work on DCTA's behalf shall provide the DCTA a certificate of insurance or a copy of their insurance policy(s) evidencing the coverage and coverage provisions identified herein within ten (10) days of request from DCTA. Bidders shall provide DCTA evidence that all subcontractors performing work on the project have the same types and amounts of coverage as required herein or that the subcontractors are included under the bidder's policy. Work shall not commence until insurance has been approved by DCTA.

All insurance companies and coverage must be authorized by the Texas Department of Insurance to transact business in the State of Texas and must have a A.M. Best's rating A- or greater.

Listed below are the types and minimum amounts of insurances required and which must be maintained during the term of the contract. DCTA reserves the right to amend or require additional types and amounts of coverage or provisions depending on the nature of the work.

COMMERCIAL GENERAL LIABILITY:

- Bodily Injury/Property Damage per occurrence $1,000,000
- General Aggregate $2,000,000
- Products/Completed Aggregate $2,000,000
- Personal Advertising Injury per occurrence $1,000,000
- Fire Damage $100,000
- Medical Expense $5,000

BUSINESS AUTO LIABILITY

to include coverage for:

- Owned/Leased vehicles
- Non-owned vehicles
- Hired vehicles
- Combined Single Limit $1,000,000

WORKERS' COMPENSATION EMPLOYERS' LIABILITY

to include:
each accident
Disease Policy Limits
Disease each employee

Statutory Limits per occurrence

- Each accident $1,000,000
- Disease Policy Limits $1,000,000
- Disease each employee..... $1,000,000

ADDITIONAL INSURED:

The Commercial General Liability and Commercial Automobile Liability policies shall be endorsed to name DCTA, its directors and employees as additional insured regarding Bidder's operations in performance of this Contract.

WAIVER OF SUBROGATION:

The Workers' Compensation and Employers' Liability shall be endorsed to provide a waiver of subrogation in favor of DCTA, its officers, directors and employees.

COVERAGE PRIMARY:

Such insurance as is provided therein shall be primary and non-contributing with any other valid and collectible insurance available to DCTA. The limits of liability required above may be provided by a single policy of insurance or by a combination of primary, excess or umbrella policies. But in no event shall the total limits of liability available for any one occurrence or accident be less than the amounts required below.

NO COMMENCEMENT WITHOUT COVERAGE:

The Bidder shall not commence work at the site under this Contract until he/she has obtained all required insurance and until such insurance has been approved by DCTA. Bidder shall not allow any subcontractor to commence work until all similar required insurance has been obtained and approved. Approval of the insurance by DCTA shall not relieve or decrease the liability of the Bidder hereunder.

CERTIFICATES:

Certificate of Insurance evidencing insurance coverage as required shall be furnished to the Purchasing Manager prior to commencement of work and within ten (10) calendar days after the date of Notice of Award. CERTIFICATES SHALL BE PROVIDED BY BIDDER AND ANYONE INVOLVED IN THE PERFORMANCE OF WORK UNDER THIS CONTRACT (not otherwise included under Bidder's coverage), INCLUDING ALL SUBCONTRACTORS. All certificates from Bidder and any subcontractors must be issued reflecting DCTA as the certificate holder. All Certificates of Insurance shall reflect the Denton County Transportation Authority project number. Failure to furnish the required certificates of insurance within the time allowed shall not be considered cause for modification of any contractual time limits. All policies of insurance presented, as proof of compliance with the above requirements shall be on forms and with insurance companies approved by DCTA. All such insurance policies shall be provided by insurance companies having a Best's rating of A-VI rating or greater as shown in the most current issue of A.M. Best's Key Rating Guide. Policies of insurance issued by insurance companies not rated by Best's or have a Best's rating lower than A-VI will not be accepted as complying with the insurance requirements of the Contract unless such insurance companies are approved in writing prior to the award of the Contract. Certificate of Insurance shall contain transcripts from the proper office of the insurer, evidencing in particular those insured, the extent of the insurance, the location, and the cancellation clause as required below.

NO LAPSE OR CANCELLATION:

The Bidder and any subcontractor shall not cause any insurance to be canceled nor permit any insurance to lapse. All insurance policies shall include a clause to the effect that the policy shall not be canceled, reduced, restricted, or limited until thirty (30) days after DCTA has received written notice. In the event of cancellation or lapse of insurance, the Bidder shall notify DCTA immediately and unless otherwise

directed by DCTA, shall cease work until evidence of acceptable insurance coverage is supplied to DCTA.

BREACH:

Failure to maintain insurance coverage as required herein shall constitute a material breach and default.

Fly America Requirements – Applicability – all contracts involving transportation of persons or property, by air between the U.S. and/or places outside the U.S. These requirements do not apply to micro-purchases ($10,000 or less, except for construction contracts over $2,000). Contractor shall comply with 49 USC 40118 (the "Fly America" Act) in accordance with General Services Administration regulations 41 CFR 301-10, stating that recipients and subrecipients of Federal funds and their contractors are required to use US Flag air carriers for US Governmentfinanced international air travel and transportation of their personal effects or property, to the extent such service is available, unless travel by foreign air carrier is a matter of necessity, as defined by the Fly America Act. Contractor shall submit, if a foreign air carrier was used, an appropriate certification or memorandum adequately explaining why service by a US flag air carrier was not available or why it was necessary to use a foreign air carrier and shall, in any event, provide a certificate of compliance with the Fly America requirements. Contractor shall include the requirements of this section in all subcontracts that may involve international air transportation.

Buy America Requirements – Applicability – Construction Contracts and Acquisition of Goods or Rolling Stock (valued at more than $150,000) Contractor shall comply with 49 USC 5323(j) and 49 CFR 661, stating that Federal funds may not be obligated unless steel, iron, and manufactured products used in FTA-funded projects are produced in the United States, unless a waiver has been granted by FTA or the product is subject to a general waiver. General waivers are listed in 49 CFR 661.7, and include software, microcomputer equipment and small purchases (currently less than $150,000) made with capital, operating, or planning funds. Separate requirements for rolling stock are stated at 5323(j)(2)(C) and 49 CFR 661.11. Rolling stock must be manufactured in the US and have a minimum 60% domestic content for FY2016 and FY2017, a minimum 65% domestic content for FY2018 and FY2019 and a minimum 70% domestic content for FY2020 and beyond. A bidder or offeror shall submit appropriate Buy America certification to the recipient with all bids on FTA-funded contracts, except those subject to a general waiver. Proposals not accompanied by a completed Buy America certification shall be rejected as nonresponsive. This requirement does not apply to lower tier subcontractors.

Cargo Preference - Use of US-Flag Vessels – Applicability – Contracts involving equipment, materials or commodities which may be transported by ocean vessels. These requirements do not apply to micro-purchases ($10,000 or less, except for construction contracts over $2,000). Contractor shall: a. use privately owned US-Flag commercial vessels to ship at least 50% of the gross tonnage (computed separately for dry bulk carriers, dry cargo liners, and tankers) involved, whenever shipping any equipment, material, or commodities pursuant to the underlying contract to the extent such vessels are available at fair and reasonable rates for US flag commercial vessels; b. furnish within 20 working days following the loading date of shipments originating within the US or within 30 working days following the loading date of shipments originating outside the US, a legible copy of a rated, "on-board" commercial bill-of-lading in English for each shipment of cargo described herein to the Division of National Cargo, Office of Market Development, Maritime Administration, Washington, DC 20590 and to the recipient (through contractor in the case of a subcontractor's bill-of-lading.) c. include these requirements in all subcontracts issued pursuant to this contract when the subcontract involves the transport of equipment, material, or commodities by ocean vessel.

Energy Conservation – Applicability – All Contracts except micro-purchases ($10,000 or less, except for construction contracts over $2,000) Contractor shall comply with mandatory standards and policies relating to energy efficiency, stated in the state energy conservation plan issued in compliance with the Energy Policy & Conservation Act.

Clean Water – Applicability – All Contracts and Subcontracts over $150,000. Contractor shall comply with all applicable standards, orders or regulations issued pursuant to the Federal Water Pollution Control Act, as amended, 33 USC 1251 et seq. Contractor shall report each violation to the recipient and understands and agrees that the recipient shall, in turn, report each violation as required to FTA and the appropriate EPA Regional Office. Contractor shall include these requirements in each subcontract exceeding $150,000 financed in whole or in part with FTA assistance.

Lobbying – Applicability – Construction/Architectural and Engineering/Acquisition of Rolling Stock/Professional Service Contract/Operational Service Contract/Turnkey contracts over $100,000 Byrd Anti-Lobbying Amendment, 31 U.S.C. 1352, as amended by the Lobbying Disclosure Act of 1995, P.L. 104-65 [to be codified at 2 U.S.C. § 1601, et seq.] - Contractors who apply or bid for an award of $100,000 or more shall file the certification required by 49 CFR part 20, "New Restrictions on Lobbying." Each tier certifies to the tier above that it will not and has not used Federal appropriated funds to pay any person or organization for influencing or attempting to influence an officer or employee of any agency, a member of Congress, officer or employee of Congress, or an employee of a member of Congress in connection with obtaining any Federal contract, grant or any other award covered by 31 U.S.C. 1352. Each tier shall also disclose the name of any registrant under the Lobbying Disclosure Act of 1995 who has made lobbying contacts on its behalf with non-Federal funds with respect to that Federal contract, grant or award covered by 31 U.S.C. 1352. Such disclosures are forwarded from tier to tier up to the recipient.

Access to Records and Reports – Applicability – As shown below. These requirements do not apply to micro-purchases ($10,000 or less, except for construction contracts over $2,000) The following access to records requirements apply to this Contract:

1. Where the purchaser is not a State but a local government and is an FTA recipient or a subgrantee of FTA recipient in accordance with 49 CFR 18.36(i), contractor shall provide the purchaser, the FTA, the US Comptroller General or their authorized representatives access to any books, documents, papers and contractor records which are pertinent to this contract for the purposes of making audits, examinations, excerpts and transcriptions. Contractor shall also, pursuant to 49 CFR 633.17, provide authorized FTA representatives, including any PMO contractor, access to contractor's records and construction sites pertaining to a capital project, defined at 49 USC 5302(a)1, which is receiving FTA assistance through the programs described at 49 USC 5307, 5309 or 5311.
2. Where the purchaser is a State and is an FTA recipient or a subgrantee of FTA recipient in accordance with 49 CFR 633.17, contractor shall provide the purchaser, authorized FTA representatives, including any PMO Contractor, access to contractor's records and construction sites pertaining to a capital project, defined at 49 USC 5302(a)1, which receives FTA assistance through the programs described at 49 USC 5307, 5309 or 5311. By definition, a capital project excludes contracts of less than the simplified acquisition threshold currently set at $250,000.
3. Where the purchaser enters into a negotiated contract for other than a small purchase or under the simplified acquisition threshold and is an institution of higher education, a hospital or other non-profit organization and is an FTA recipient or a subgrantee of FTA recipient in accordance with 49 CFR 19.48, contractor shall provide the purchaser, the FTA, the US Comptroller General or their authorized representatives, access to any books, documents, papers and record of the
contractor which are directly pertinent to this contract for the purposes of making audits, examinations, excerpts and transcriptions.
4. Where a purchaser which is an FTA recipient or a subgrantee of FTA recipient in accordance with 49 USC 5325(a) enters into a contract for a capital project or improvement (defined at 49 USC 5302(a)1) through other than competitive bidding, contractor shall make available records related to the contract to the purchaser, the Secretary of USDOT and the US Comptroller General or any authorized officer or employee of any of them for the purposes of conducting an audit and inspection.
5. Contractor shall permit any of the foregoing parties to reproduce by any means whatsoever or to copy excerpts and transcriptions as reasonably needed.

6. Contractor shall maintain all books, records, accounts and reports required under this contract for a period of not less than three (3) years after the date of termination or expiration of this contract, except in the event of litigation or settlement of claims arising from the performance of this contract, in which case contractor agrees to maintain same until the recipient, FTA Administrator, US Comptroller General, or any of their authorized representatives, have disposed of all such litigation, appeals, claims or exceptions related thereto. Re: 49 CFR 18.39(i)(11).

FTA does not require the inclusion of these requirements in subcontracts.

Federal Changes – Applicability – All Contracts except micro-purchases ($10,000 or less, except for construction contracts over $2,000) Contractor shall comply with all applicable FTA regulations, policies, procedures and directives, including without limitation those listed directly or by reference in the Master Agreement between the recipient and FTA, as they may be amended or promulgated from time to time during the term of the contract. Contractor's failure to comply shall constitute a material breach of the contract.

Clean Air – Applicability – All contracts over $150,000. 1) Contractor shall comply with all applicable standards, orders or regulations pursuant to the Clean Air Act, 42 USC 7401 et seq. Contractor shall report each violation to the recipient and understands and agrees that the recipient will, in turn, report each violation as required to FTA and the appropriate EPA Regional Office. 2) Contractor shall include these requirements in each subcontract exceeding $150,000 financed in whole or in part with FTA assistance.

Recycled Products – Applicability – All contracts for items designated by the EPA, when the purchaser or contractor procures $10,000 or more of one of these items during the current or previous fiscal year using Federal funds. The contractor agrees to comply with all the requirements of Section 6002 of the Resource Conservation and Recovery Act (RCRA), as amended (42 U.S.C. 6962), including but not limited to the regulatory provisions of 40 CFR Part 247, and Executive Order 12873, as they apply to the procurement of the items designated in Subpart B of 40 CFR Part 247.

No Government Obligation to Third Parties – Applicability – All contracts except micropurchases ($10,000 or less, except for construction contracts over $2,000)

(1) The recipient and contractor acknowledge and agree that, notwithstanding any concurrence by the US Government in or approval of the solicitation or award of the underlying contract, absent the express written consent by the US Government, the US Government is not a party to this contract and shall not be subject to any obligations or liabilities to the recipient, the contractor, or any other party (whether or not a party to that contract) pertaining to any matter resulting from the underlying contract.

(2) Contractor agrees to include the above clause in each subcontract financed in whole or in part with FTA assistance. It is further agreed that the clause shall not be modified, except to identify the subcontractor who will be subject to its provisions.

Program Fraud and False or Fraudulent Statements or Related Acts – Applicability – All contracts except micro-purchases ($10,000 or less, except for construction contracts over $2,000)

(1) Contractor acknowledges that the provisions of the Program Fraud Civil Remedies Act of 1986, as amended, 31 USC 3801 et seq. and USDOT regulations, "Program Fraud Civil Remedies," 49 CFR 31, apply to its actions pertaining to this project. Upon execution of the underlying contract, contractor certifies or affirms the truthfulness and accuracy of any statement it has made, it makes, it may make, or causes to be made, pertaining to the underlying contract or FTA assisted project for which this contract work is being performed. In addition to other penalties that may be applicable, contractor further acknowledges that if it makes, or causes to be made, a false, fictitious, or fraudulent claim, statement, submittal, or certification, the US Government reserves the right to impose the penalties of the Program Fraud Civil Remedies Act (1986) on contractor to the extent the US Government deems appropriate.

(2) If contractor makes, or causes to be made, a false, fictitious, or fraudulent claim, statement, submittal, or certification to the US Government under a contract connected with a project that is financed in whole or in part with FTA assistance under the authority of 49 USC 5307, the Government reserves the right to impose the penalties of 18 USC 1001 and 49 USC 5307(n)(1) on contractor, to the extent the US Government deems appropriate. (3) Contractor shall include the above two clauses in each subcontract financed in whole or in part with FTA assistance. The clauses shall not be modified, except to identify the subcontractor who will be subject to the provisions.

Termination – Applicability – All Contracts over $10,000, except contracts with nonprofit organizations and institutions of higher learning, where the threshold is $250,000

a. Termination for Convenience (General Provision) the recipient may terminate this contract, in whole or in part, at any time by written notice to contractor when it is in the recipient's best interest. Contractor shall be paid its costs, including contract close-out costs, and profit on work performed up to the time of termination. Contractor shall promptly submit its termination claim to the recipient. If contractor is in possession of any of the recipient's property, contractor shall account for same, and dispose of it as the recipient directs.

b. Termination for Default [Breach or Cause] (General Provision) If contractor does not deliver items in accordance with the contract delivery schedule, or, if the contract is for services, and contractor fails to perform in the manner called for in the contract, or if contractor fails to comply with any other provisions of the contract, the recipient may terminate this contract for default. Termination shall be effected by serving a notice of termination to contractor setting forth the manner in which contractor is in default. Contractor shall only be paid the contract price for supplies delivered and accepted, or for services performed in accordance with the manner of performance set forth in the contract. If it is later determined by the recipient that contractor had an excusable reason for not performing, such as a strike, fire, or flood, events which are not the fault of or are beyond the control of contractor, the recipient, after setting up a new delivery or performance schedule, may allow contractor to continue work, or treat the termination as a termination for convenience.

c. Opportunity to Cure (General Provision) the recipient in its sole discretion may, in the case of a termination for breach or default, allow contractor an appropriately short period of time in which to cure the defect. In such case, the notice of termination shall state the time period in which cure is permitted and other appropriate conditions If contractor fails to remedy to the recipient's satisfaction the breach or default or any of the terms, covenants, or conditions of this Contract within ten (10) days after receipt by contractor or written notice from the recipient setting forth the nature of said breach or default, the recipient shall have the right to terminate the Contract without any further obligation to contractor. Any such termination for default shall not in any way operate to preclude the recipient from also pursuing all available remedies against contractor and its sureties for said breach or default.

d. Waiver of Remedies for any Breach In the event that the recipient elects to waive its remedies for any breach by contractor of any covenant, term or condition of this Contract, such waiver by the recipient shall not limit its remedies for any succeeding breach of that or of any other term, covenant, or condition of this Contract.

e. Termination for Convenience (Professional or Transit Service Contracts) the recipient, by written notice, may terminate this contract, in whole or in part, when it is in the recipient's interest. If the contract is terminated, the recipient shall be liable only for payment under the payment provisions of this contract for services rendered before the effective date of termination.

f. Termination for Default (Supplies and Service) If contractor fails to deliver supplies or to perform the services within the time specified in this contract or any extension or if the contractor fails to comply with any other provisions of this contract, the recipient may terminate this contract for default. The recipient shall terminate by delivering to contractor a notice of termination specifying the nature of default. Contractor shall only be paid the contract price for supplies delivered and accepted, or services performed in accordance with the manner or performance set forth in this contract. If, after termination for failure to fulfill contract obligations, it is determined that contractor was not in default, the rights and obligations of the parties shall be the same as if termination had been issued for the recipient's convenience.

g. Termination for Default (Transportation Services) If contractor fails to pick up the commodities or to perform the services, including delivery services, within the time specified in this contract or any extension or if contractor fails to comply with any other provisions of this contract, the recipient may terminate this contract for default. The recipient shall terminate by delivering to contractor a notice of termination specifying the nature of default. Contractor shall only be paid the contract price for services performed in accordance with the manner of performance set forth in this contract. If this contract is terminated while contractor has possession of the recipient goods, contractor shall, as directed by the recipient, protect and preserve the goods until surrendered to the recipient or its agent. Contractor and the recipient shall agree on payment for the preservation and protection of goods. Failure to agree on an amount shall be resolved under the Dispute clause. If, after termination for failure to fulfill contract obligations, it is determined that contractor was not in default, the rights and obligations of the parties shall be the same as if termination had been issued for the recipient's convenience.

h. Termination for Default (Construction) If contractor refuses or fails to prosecute the work or any separable part, with the diligence that will insure its completion within the time specified, or any extension, or fails to complete the work within this time, or if contractor fails to comply with any other provisions of this contract, the recipient may terminate this contract for default. the recipient shall terminate by delivering to contractor a notice of termination specifying the nature of default. In this event, the recipient may take over the work and compete it by contract or otherwise, and may take possession of and use any materials, appliances, and plant on the work site necessary for completing the work. Contractor and its sureties shall be liable for any damage to the recipient resulting from contractor's refusal or failure to complete the work within specified time, whether or not contractor's right to proceed with the work is terminated. This liability includes any increased costs incurred by the recipient in completing the work.
Contractor's right to proceed shall not be terminated nor shall contractor be charged with damages under this clause if:
1. Delay in completing the work arises from unforeseeable causes beyond the control and without the fault or negligence of contractor. Examples of such causes include: acts of God, acts of the recipient, acts of another contractor in the performance of a contract with the recipient, epidemics, quarantine restrictions, strikes, freight embargoes; and
2. Contractor, within 10 days from the beginning of any delay, notifies the recipient in writing of the causes of delay. If in the recipient's judgment, delay is excusable, the time for completing the work shall be extended. The recipient's judgment shall be final and conclusive on the parties, but subject to appeal under the Disputes clauses.
If, after termination of contractor's right to proceed, it is determined that contractor was not in default, or that the delay was excusable, the rights and obligations of the parties will be the same as if termination had been issued for the recipient's convenience.

i. Termination for Convenience or Default (Architect & Engineering) the recipient may terminate this contract in whole or in part, for the recipient's convenience or because of contractor's failure to fulfill contract obligations. The recipient shall terminate by delivering to contractor a notice of termination specifying the nature, extent, and effective date of termination. Upon receipt of the notice, contractor shall (1) immediately discontinue all services affected (unless the notice directs otherwise), and (2) deliver to the recipient all data, drawings, specifications, reports, estimates, summaries, and other information and materials accumulated in performing this contract, whether completed or in process. If termination is for the recipient's convenience, it shall make
an equitable adjustment in the contract price but shall allow no anticipated profit on unperformed services. If termination is for contractor's failure to fulfill contract obligations, the recipient may complete the work by contact or otherwise and contractor shall be liable for any additional cost incurred by the recipient. If, after termination for failure to fulfill contract obligations, it is determined that contractor was not in default, the rights and obligations of the parties shall be the same as if termination had been issued for the recipient's convenience.

j. Termination for Convenience or Default (Cost-Type Contracts) the recipient may terminate this contract, or any portion of it, by serving a notice or

termination on contractor. The notice shall state whether termination is for convenience of the recipient or for default of contractor. If termination is for default, the notice shall state the manner in which contractor has failed to perform the requirements of the contract. Contractor shall account for any property in its possession paid for from funds received from the recipient, or property supplied to contractor by the recipient. If termination is for default, the recipient may fix the fee, if the contract provides for a fee, to be paid to contractor in proportion to the value, if any, of work performed up to the time of termination. Contractor shall promptly submit its termination claim to the recipient and the parties shall negotiate the termination settlement to be paid to contractor. If termination is for the recipient's convenience, contractor shall be paid its contract close-out costs, and a fee, if the contract provided for payment of a fee, in proportion to the work performed up to the time of termination. If, after serving a notice of termination for default, the recipient determines that contractor has an excusable reason for not performing, such as strike, fire, flood, events which are not the fault of and are beyond the control of contractor, the recipient, after setting up a new work schedule, may allow contractor to continue work, or treat the termination as a termination for convenience.

Government-Wide Debarment and Suspension (Nonprocurement) – Applicability – Contracts over $25,000 The Recipient agrees to the following:

(1) It will comply with the requirements of 2 C.F.R. part 180, subpart C, as adopted and supplemented by U.S. DOT regulations at 2 C.F.R. part 1200, which include the following: (a) It will not enter into any arrangement to participate in the development or implementation of the Project with any Third Party Participant that is debarred or suspended except as authorized by: 1 U.S. DOT regulations, "Nonprocurement Suspension and Debarment," 2 C.F.R. part 1200, 2 U.S. OMB, "Guidelines to Agencies on Governmentwide Debarment and Suspension (Nonprocurement)," 2 C.F.R. part 180, including any amendments thereto, and 3 Executive Orders Nos. 12549 and 12689, "Debarment and Suspension," 31 U.S.C. § 6101 note, (b) It will review the U.S. GSA "System for Award Management," https:// www.sam.gov, if required by U.S. DOT regulations, 2 C.F.R. part 1200, and (c) It will include, and require each of its Third Party Participants to include, a similar provision in each lower tier covered transaction, ensuring that each lower tier Third Party Participant: 1 Will comply with Federal debarment and suspension requirements, and 2 Reviews the "System for Award Management" at https://www.sam.gov, if necessary to comply with U.S. DOT regulations, 2 C.F.R. part 1200, and (2) If the Recipient suspends, debars, or takes any similar action against a Third Party Participant or individual, the Recipient will provide immediate written notice to the: (a) FTA Regional Counsel for the Region in which the Recipient is located or implements the
Project, (b) FTA Project Manager if the Project is administered by an FTA Headquarters Office, or (c) FTA Chief Counsel,

Contracts Involving Federal Privacy Act Requirements – Applicability – When a grantee maintains files on drug and alcohol enforcement activities for FTA, and those files are organized so that information could be retrieved by personal identifier, the Privacy Act requirements apply to all contracts except micro-purchases ($10,000 or less, except for construction contracts over $2,000)
The following requirements apply to the Contractor and its employees that administer any system of records on behalf of the Federal Government under any contract:

(1) The Contractor agrees to comply with, and assures the compliance of its employees with, the information restrictions and other applicable requirements of the Privacy Act of 1974, 5 U.S.C. § 552a. Among other things, the Contractor agrees to obtain the express consent of the Federal Government before the Contractor or its employees operate a system of records on behalf of the Federal Government. The Contractor understands that the requirements of the Privacy Act, including the civil and criminal penalties for violation of that Act, apply to those individuals involved, and that failure to comply with the terms of the Privacy Act may result in termination of the underlying contract.

(2) The Contractor also agrees to include these requirements in each subcontract to administer any system of records on behalf of the Federal Government financed in whole or in part with Federal assistance provided by FTA.

Civil Rights Requirements – Applicability – All contracts except micro-purchases ($10,000 or less, except for construction contracts over $2,000)
The following requirements apply to the underlying contract:
The Recipient understands and agrees that it must comply with applicable Federal civil rights laws and regulations, and follow applicable Federal guidance, except as the Federal Government determines otherwise in writing. Therefore, unless a Recipient or Program, including an Indian Tribe or the Tribal Transit Program, is specifically exempted from a civil rights statute, FTA requires compliance with that civil rights statute, including compliance with equity in service:

a. Nondiscrimination in Federal Public Transportation Programs. The Recipient agrees to, and assures that each Third Party Participant will, comply with Federal transit law, 49 U.S.C. § 5332 (FTA's "Nondiscrimination" statute): (1) FTA's "Nondiscrimination" statute prohibits discrimination on the basis of: (a) Race, (b) Color, (c) Religion, (d) National origin, (e) Sex, (f) Disability, (g) Age, or (h) Gender identity and (2) The FTA "Nondiscrimination" statute's prohibition against discrimination includes: (a) Exclusion from participation, (b) Denial of program benefits, or (c) Discrimination, including discrimination in employment or business opportunity, (3) Except as FTA determines otherwise in writing: (a) General. Follow: 1 The most recent edition of FTA Circular 4702.1, "Title VI Requirements and Guidelines for Federal Transit Administration Recipients," to the extent consistent with applicable Federal laws, regulations, and guidance, and 2 Other applicable Federal guidance that may be issued, but (b) Exception for the Tribal Transit Program. FTA does not require an Indian Tribe to comply with FTA program-specific guidelines for Title VI when administering its projects funded under the Tribal Transit Program,

b. Nondiscrimination – Title VI of the Civil Rights Act. The Recipient agrees to, and assures that each Third Party Participant will: (1) Prohibit discrimination based on: (a) Race, (b) Color, or (c) National origin, (2) Comply with: (a) Title VI of the Civil Rights Act of 1964, as amended, 42 U.S.C. § 2000d et seq., (b) U.S. DOT regulations, "Nondiscrimination in Federally-Assisted Programs of the Department of Transportation – Effectuation of Title VI of the Civil Rights Act of 1964," 49 C.F.R. part 21, and (c) Federal transit law, specifically 49 U.S.C. § 5332, as stated in the preceding section a, and (3) Except as FTA determines otherwise in writing, follow: (a) The most recent edition of FTA Circular 4702.1, "Title VI and Title VI-Dependent Guidelines for Federal Transit Administration Recipients," to the extent consistent with applicable Federal laws, regulations, and guidance. (b) U.S. DOJ, "Guidelines for the enforcement of Title VI, Civil Rights Act of 1964," 28 C.F.R. § 50.3, and (c) Other applicable Federal guidance that may be issued,

c. Equal Employment Opportunity. (1) Federal Requirements and Guidance. The Recipient agrees to, and assures that each Third Party Participant will, prohibit discrimination on the basis of race, color, religion, sex, or national origin, and: (a) Comply with Title VII of the Civil Rights Act of 1964, as amended, 42 U.S.C. § 2000e et seq., (b) Facilitate compliance with Executive Order No. 11246, "Equal Employment Opportunity," as amended by Executive Order No. 11375, "Amending Executive Order No. 11246, Relating to Equal Employment Opportunity," 42 U.S.C. § 2000e note, (c) Comply with Federal transit law, specifically 49 U.S.C. § 5332, as stated in section a, and (d) Comply with FTA Circular 4704.1other applicable EEO laws and regulations, as provided in Federal guidance, including laws and regulations prohibiting discrimination on the basis of disability, except as the Federal Government determines otherwise in writing, (2) General. The Recipient agrees to: (a) Ensure that applicants for employment are employed and employees are treated during employment without discrimination on the basis of their: 1 Race, 2 Color, 3 Religion, 4 Sex, 5 Disability, 6 Age, or 7 National origin, (b) Take affirmative action that includes, but is not limited to: 1 Recruitment advertising, 2 Recruitment, 3 Employment, 4 Rates of pay, 5

Other forms of compensation, 6 Selection for training, including apprenticeship, 7 Upgrading, 8 Transfers, 9 Demotions, 10 Layoffs, and 11 Terminations, but (b) Indian Tribe. Title VII of the Civil Rights Act of 1964, as amended, exempts Indian Tribes under the definition of "Employer". (3) Equal Employment Opportunity Requirements for Construction Activities. In addition to the foregoing, when undertaking "construction" as recognized by the U.S. Department of Labor (U.S. DOL), the Recipient agrees to comply, and assures the compliance of each Third Party Participant, with: (a) U.S. DOL regulations, "Office of Federal Contract Compliance Programs, Equal Employment Opportunity, Department of Labor," 41 C.F.R. chapter 60, and (b) Executive Order No. 11246, "Equal Employment Opportunity," as amended by Executive Order No. 11375, "Amending Executive Order No. 11246, Relating to Equal Employment Opportunity," 42 U.S.C. § 2000e note,

d. Disadvantaged Business Enterprise. To the extent authorized by applicable Federal law, the Recipient agrees to facilitate, and assures that each Third Party Participant will facilitate, participation by small business concerns owned and controlled by socially and economically disadvantaged individuals, also referred to as "Disadvantaged Business Enterprises" (DBEs), in the Project as follows: 1) Requirements. The Recipient agrees to comply with: (a) Section 1101(b) of Map-21, 23 U.S.C. § 101 note, (b) U.S. DOT regulations, "Participation by Disadvantaged Business Enterprises in Department of Transportation Financial Assistance Programs," 49 C.F.R. part 26, and (c) Federal transit law, specifically 49 U.S.C. § 5332, as stated in section a, (2) Assurance. As required by 49 C.F.R. § 26.13(a), (b) DBE Program Requirements. Recipients receiving planning, capital and/or operating assistance that will award prime third party contracts exceeding $250,000 in a Federal fiscal year must: 1 Have a DBE program meeting the requirements of 49 C.F.R. part 26, 2 Implement a DBE program approved by FTA, and 3 Establish an annual DBE participation goal, (c) Special Requirements for a Transit Vehicle Manufacturer. The Recipient understands and agrees that each transit vehicle manufacturer, as a condition of being authorized to bid or propose on FTA-assisted transit vehicle procurements, must certify that it has complied with the requirements of 49 C.F.R. part 26, (d) the Recipient provides assurance that: The Recipient shall not discriminate on the basis of race, color, national origin, or sex in the award and performance of any DOT-assisted contract or in the administration of its DBE program or the requirements of 49 C.F.R. part 26. The Recipient shall take all necessary and reasonable steps under 49 C.F.R. part 26 to ensure nondiscrimination in the award and administration of DOT-assisted contracts. The Recipient's DBE program, as required by 49 C.F.R. part 26 and as approved by DOT, is incorporated by reference in this agreement. Implementation of this program is a legal obligation and failure to carry out its terms shall be treated as a violation of this agreement. Upon notification to the Recipient of its failure to carry out its approved program, the Department may impose sanctions as provided for under 49 C.F.R. part 26 and may, in appropriate cases, refer the matter for enforcement under 18 U.S.C. § 1001 and/or the Program Fraud Civil Remedies Act of 1986, 31 U.S.C. § 3801 et seq., (2) Exception for the Tribal Transit Program. FTA exempts Indian tribes from the Disadvantaged Business Enterprise regulations at 49 C.F.R. part 26 under Map-21and previous legislation,

e. Nondiscrimination on the Basis of Sex. The Recipient agrees to comply with Federal prohibitions against discrimination on the basis of sex, including: (1) Title IX of the Education Amendments of 1972, as amended, 20 U.S.C. § 1681 et seq., (2) U.S. DOT regulations, "Nondiscrimination on the Basis of Sex in Education Programs or Activities Receiving Federal Financial Assistance," 49 C.F.R. part 25, and (3) Federal transit law, specifically 49 U.S.C. § 5332, as stated in section a,

f. Nondiscrimination on the Basis of Age. The Recipient agrees to comply with Federal prohibitions against discrimination on the basis of age, including: (1) The Age Discrimination in Employment Act (ADEA), 29 U.S.C. §§ 621 – 634, which prohibits discrimination on the basis of age, (2) U.S. Equal Employment Opportunity Commission (U.S. EEOC) regulations, "Age Discrimination in Employment Act," 29 C.F.R. part 1625, which implements the ADEA, (3) The Age Discrimination Act of 1975, as amended, 42 U.S.C. § 6101 et seq., which prohibits discrimination against individuals on the basis of age in the administration of programs or activities receiving Federal funds, (4) U.S. Health and Human Services regulations, "Nondiscrimination on the Basis of Age in Programs or Activities Receiving Federal Financial Assistance," 45 C.F.R. part 90, which implements the Age Discrimination Act of 1975, and (5) Federal transit law, specifically 49 U.S.C. § 5332, as stated in section a,

g. Nondiscrimination on the Basis of Disability. The Recipient agrees to comply with the following Federal prohibitions pertaining to discrimination against seniors or individuals with disabilities: (1) Federal laws, including: (a) Section 504 of the Rehabilitation Act of 1973, as amended, 29 U.S.C. § 794, which prohibits discrimination on the basis of disability in the administration of federally funded programs or activities, (b) The Americans with Disabilities Act of 1990 (ADA), as amended, 42 U.S.C. § 12101 et seq., which requires that accessible facilities and services be made available to individuals with disabilities, 1 General. Titles I, II, and III of the ADA apply to FTA Recipients, but 2 Indian Tribes. While Titles II and III of the ADA apply to Indian Tribes, Title I of the ADA exempts Indian Tribes from the definition of "employer," (c) The Architectural Barriers Act of 1968, as amended, 42 U.S.C. § 4151 et seq., which requires that buildings and public accommodations be accessible to individuals with disabilities, (d) Federal transit law, specifically 49 U.S.C. § 5332, which now includes disability as a prohibited basis for discrimination, and (e) Other applicable laws and amendments pertaining to access for elderly individuals or individuals with disabilities, (2) Federal regulations, including: (a) U.S. DOT regulations, "Transportation Services for Individuals with Disabilities (ADA)," 49 C.F.R. part 37, (b) U.S. DOT regulations, "Nondiscrimination on the Basis of Disability in Programs and Activities Receiving or Benefiting from Federal Financial Assistance," 49 C.F.R. part 27, (c) U.S. DOT regulations, "Transportation for Individuals with Disabilities: Passenger Vessels," 49 C.F.R. part 39, (d) Joint U.S. Architectural and Transportation Barriers Compliance Board (U.S. ATBCB) and U.S. DOT regulations, "Americans With Disabilities (ADA) Accessibility Specifications for Transportation Vehicles," 36 C.F.R. part 1192 and 49 C.F.R. part 38, (e) U.S. DOJ regulations, "Nondiscrimination on the Basis of Disability in State and Local Government Services," 28 C.F.R. part 35, (f) U.S. DOJ regulations, "Nondiscrimination on the Basis of Disability by Public Accommodations and in Commercial Facilities," 28 C.F.R. part 36, (g) U.S. EEOC, "Regulations to Implement the Equal Employment Provisions of the Americans with Disabilities Act," 29 C.F.R. part 1630, (h) U.S. Federal Communications Commission regulations, "Telecommunications Relay Services and Related Customer Premises Equipment for Persons with Disabilities," 47 C.F.R. part 64, Subpart F, (i) U.S. ATBCB regulations, "Electronic and Information Technology Accessibility Standards," 36 C.F.R. part 1194, and (j) FTA regulations, "Transportation for Elderly and Handicapped Persons," 49 C.F.R. part 609, and (3) Other applicable Federal civil rights and nondiscrimination guidance,

h. Drug or Alcohol Abuse - Confidentiality and Other Civil Rights Protections. The Recipient agrees to comply with the confidentiality and civil rights protections of: (1) The Drug Abuse Office and Treatment Act of 1972, as amended, 21 U.S.C. § 1101 et seq., (2) The Comprehensive Alcohol Abuse and Alcoholism Prevention, Treatment and Rehabilitation Act of 1970, as amended, 42 U.S.C. § 4541 et seq., and (3) The Public Health Service Act, as amended, 42 U.S.C. §§ 290dd – 290dd-2,

i. Access to Services for People with Limited English Proficiency. Except as the Federal Government determines otherwise in writing, the Recipient agrees to promote accessibility of public transportation services to people whose understanding of English is limited by following: 1) Executive Order No. 13166, "Improving Access to Services for Persons with Limited English Proficiency," August 11, 2000, 42 U.S.C. § 2000d-1 note, and (2) U.S. DOT Notice, "DOT Policy Guidance Concerning Recipients' Responsibilities to Limited English Proficiency (LEP) Persons," 70 Fed. Reg. 74087, December 14, 2005,

j. Other Nondiscrimination Laws. Except as the Federal Government determines otherwise in writing, the Recipient agrees to: (1) Comply with other applicable Federal nondiscrimination laws and regulations, and (2) Follow Federal guidance prohibiting discrimination.

k. Remedies. Remedies for failure to comply with applicable Federal Civil Rights laws and Federal regulations may be enforced as provided in those Federal laws or Federal regulations.

Breaches and Dispute Resolution – Applicability – All contracts over $150,000 Disputes arising in the performance of this contract which are not resolved by agreement of the parties shall be decided in writing by the recipient's authorized representative. This decision shall be final and conclusive unless within ten days from the date of receipt of its copy, contractor mails or otherwise furnishes a written appeal to the recipient's CEO. In connection with such appeal, contractor shall be afforded an opportunity to be heard and to offer evidence in support of its position. The decision of the recipient's CEO shall be binding upon contractor and contractor shall abide by the decision. FTA has a vested interest in the settlement of any violation of Federal law including the False Claims Act, 31 U.S.C. § 3729.

Performance During Dispute - Unless otherwise directed by the recipient, contractor shall continue performance under this contract while matters in dispute are being resolved. Claims for Damages - Should either party to the contract suffer injury or damage to person or property because of any act or omission of the party or of any of his employees, agents or others for whose acts he is legally liable, a claim for damages therefore shall be made in writing to such other party within ten days after the first observance of such injury or damage.

Remedies - Unless this contract provides otherwise, all claims, counterclaims, disputes and other matters in question between the recipient and contractor arising out of or relating to this agreement or its breach will be decided by arbitration if the parties mutually agree, or in a court of competent jurisdiction within the residing State.

Rights and Remedies - Duties and obligations imposed by the contract documents and the rights and remedies available thereunder shall be in addition to and not a limitation of any duties, obligations, rights and remedies otherwise imposed or available by law. No action or failure to act by the recipient or contractor shall constitute a waiver of any right or duty afforded any of them under the contract, nor shall any such action or failure to act constitute an approval of or acquiescence in any breach thereunder, except as may be specifically agreed in writing.

Disadvantaged Business Enterprise (DBE) – Applicability – Contracts over $10,000 awarded on the basis of a bid or proposal offering to use DBEs

a. This contract is subject to the requirements of Title 49, Code of Federal Regulations, Part 26, Participation by Disadvantaged Business Enterprises in Department of Transportation Financial Assistance Programs. The national goal for participation of Disadvantaged Business Enterprises (DBE) is 10%. The recipient's overall goal for DBE participation is listed elsewhere. If a separate contract goal for DBE participation has been established for this procurement, it is listed elsewhere.
b. The contractor shall not discriminate on the basis of race, color, national origin, or sex in the performance of this contract. The contractor shall carry out applicable requirements of 49 CFR Part 26 in the award and administration of this contract. Failure by the contractor to carry out these requirements is a material breach of this contract, which may result in the termination of this contract or such other remedy as the municipal corporation deems appropriate. Each subcontract the contractor signs with a subcontractor must include the assurance in this paragraph (see 49 CFR 26.13(b)).
c. If a separate contract goal has been established, Bidders/offerors are required to document sufficient DBE participation to meet these goals or, alternatively, document adequate good faith efforts to do so, as provided for in 49 CFR 26.53.
d. If no separate contract goal has been established, the successful bidder/offeror will be required to report its DBE participation obtained through race-neutral means throughout the period of performance.
e. The contractor is required to pay its subcontractors performing work related to this contract for satisfactory performance of that work no later than 30 days after the contractor's receipt of payment for that work from the recipient. In addition, the contractor may not hold retainage from its subcontractors or must return any retainage payments to those subcontractors within 30 days after the subcontractor's work related to this contract is satisfactorily completed or must return any retainage payments to those subcontractors within 30 days after incremental acceptance of the subcontractor's work by the recipient and contractor's receipt of the partial retainage payment related to the subcontractor's work.
f. The contractor must promptly notify the recipient whenever a DBE subcontractor performing work related to this contract is terminated or fails to complete its work, and must make good faith efforts to engage another DBE subcontractor to perform at least the same amount of work. The contractor may not terminate any DBE subcontractor and perform that work through its own forces or those of an affiliate without prior written consent of the recipient.

Prompt Payment – Applicability – All contracts except micropurchases $10,000 or less, (except for construction contracts over $2,000)

The prime contractor agrees to pay each subcontractor under this prime contract for satisfactory performance of its contract no later than 30 days from the receipt of each payment the prime contract receives from the Recipient. The prime contractor agrees further to return retainage payments to each subcontractor within 30 days after the subcontractors work is satisfactorily completed. Any delay or postponement of payment from the above referenced time frame may occur only for good cause following written approval of the Recipient. This clause applies to both DBE and non-DBE subcontracts.

Incorporation of Federal Transit Administration (FTA) Terms – Applicability – All contracts except micro-purchases ($10,000 or less, except for construction contracts over $2,000)

The preceding provisions include, in part, certain Standard Terms & Conditions required by USDOT, whether or not expressly stated in the preceding contract provisions. All USDOTrequired contractual provisions, as stated in FTA Circular 4220.1F, are hereby incorporated by reference. Anything to the contrary herein notwithstanding, all FTA mandated terms shall be deemed to control in the event of a conflict with other provisions contained in this Agreement. The contractor shall not perform any act, fail to perform any act, or refuse to comply with any request that would cause the recipient to be in violation of FTA terms and conditions.

Other Federal Requirements:

Full and Open Competition - In accordance with 49 U.S.C. $ 5325(h) all procurement transactions shall be conducted in a manner that provides full and open competition.

Prohibition Against Exclusionary or Discriminatory Specifications - Apart from inconsistent requirements imposed by Federal statute or regulations, the contractor shall comply with the requirements of 49 USC 5323(h)(2) by refraining from using any FTA assistance to support procurements using exclusionary or discriminatory specifications.

Conformance with ITS National Architecture - Contractor shall conform, to the extent applicable, to the National Intelligent Transportation Standards architecture as required by SAFETEA-LU Section 5307(c), 23 U.S.C. Section 512 note and follow the provisions of FTA Notice, "FTA National Architecture Policy on Transit Projects," 66 Fed. Reg.1455 etseq., January 8, 2001, and any other implementing directives FTA may issue at a later date, except to the extent FTA determines otherwise in writing.

Access Requirements for Persons with Disabilities - Contractor shall comply with 49 USC 5301(d), stating Federal policy that the elderly and persons with disabilities have the same rights as other persons to use mass transportation services and facilities and that special efforts shall be made in planning and designing those services and facilities to implement that policy. Contractor shall also comply with all applicable requirements of Sec. 504 of the Rehabilitation Act (1973), as amended, 29 USC 794, which prohibits discrimination on the basis of handicaps, and the Americans with Disabilities Act of 1990 (ADA), as amended, 42 USC 12101 et seq., which requires that accessible facilities and services be made available to persons with disabilities, including any subsequent amendments thereto.

Notification of Federal Participation - To the extent required by law, in the announcement of any third party contract award for goods and services (including construction services) having an aggregate value of $500,000 or more, contractor shall specify the amount of Federal assistance to be used in financing that acquisition of goods and services and to express that amount of Federal assistance as a percentage of the total cost of the third party contract.

Interest of Members or Delegates to Congress - No members of, or delegates to, the US Congress shall be admitted to any share or part of this contract nor to any benefit arising therefrom.

Ineligible Contractors and Subcontractors - Any name appearing upon the Comptroller General's list of ineligible contractors for federally-assisted contracts shall be ineligible to act as a subcontractor for contractor pursuant to this contract. If contractor is on the Comptroller General's list of ineligible contractors for federally financed or assisted construction, the recipient shall cancel, terminate or suspend this contract.

Other Contract Requirements - To the extent not inconsistent with the foregoing Federal requirements, this contract shall also include those standard clauses attached hereto, and shall comply with the recipient's Procurement Guidelines, available upon request from the recipient.

Compliance With Federal Regulations - Any contract entered pursuant to this solicitation shall contain the following provisions: All USDOT-required contractual provisions, as set forth in FTA Circular 4220.1F, are incorporated by reference. Anything to the contrary herein notwithstanding, FTA mandated terms shall control in the event of a conflict with other provisions contained in this Agreement. Contractor shall not perform any act, fail to perform any act, or refuse to comply with any grantee request that would cause the recipient to be in violation of FTA terms and conditions. Contractor shall comply with all applicable FTA regulations, policies, procedures and directives, including, without limitation, those listed directly or incorporated by reference in the Master Agreement between the recipient and FTA, as may be amended or promulgated from time to time during the term of this contract. Contractor's failure to so comply shall constitute a material breach of this contract.

Real Property - Any contract entered into shall contain the following provisions: Contractor shall at all times comply with all applicable statutes and USDOT regulations, policies, procedures and directives governing the acquisition, use and disposal of real property, including, but not limited to, 49 CFR 18.31-18.34, 49 CFR 19.30-19.37, 49 CFR Part 24, 49 CFR 5326 as amended by Map-21, 49 CFR part 18 or 19, 49 USC 5334, applicable FTA Circular 5010, and FTA Master Agreement, as they may be amended or promulgated during the term of this contract. Contractor's failure to so comply shall constitute a material breach of this contract.

Access to Services for Persons with Limited English Proficiency - To the extent applicable and except to the extent that FTA determines otherwise in writing, the Recipient agrees to comply with the policies of Executive Order No. 13166, "Improving Access to Services for Persons with Limited English Proficiency," 42 U.S.C. § 2000d 1 note, and with the provisions of U.S. DOT Notice, "DOT Guidance to Recipients on Special Language Services to Limited English Proficient (LEP) Beneficiaries," 70 Fed. Reg. 74087, December 14, 2005.

Environmental Justice - Except as the Federal Government determines otherwise in writing, the Recipient agrees to promote environmental justice by following: (1) Executive Order No. 12898, "Federal Actions to Address Environmental Justice in Minority Populations and Low-Income Populations," February 11, 1994, 42 U.S.C. $ 4321 note, as well as facilitating compliance with that Executive Order, and (2) DOT Order 5610.2, "Department of Transportation Actions To Address Environmental Justice in Minority Populations and Low-Income Populations," 62 Fed. Reg. 18377, April 15, 1997, and (3) The most recent and applicable edition of FTA Circular 4703.1, "Environmental Justice Policy Guidance for Federal Transit Administration Recipients," August 15, 2012, to the extent consistent with applicable Federal laws, regulations, and guidance,

Environmental Protections - Compliance is required with any applicable Federal laws imposing environmental and resource conservation requirements for the project. Some, but not all, of the major Federal laws that may affect the project include: the National Environmental Policy Act of 1969; the Clean Air Act; the Resource Conservation and Recovery Act; the comprehensive Environmental response, Compensation and Liability Act; as well as environmental provisions with Title 23 U.S.C., and 49 U.C. chapter 53. The U.S. EPA, FHWA and other federal agencies may issue other federal regulations and directives that may affect the project. Compliance is required with any applicable Federal laws and regulations in effect now or that become effective in the future.

Geographic Information and Related Spatial Data - (NOT APPLICABLE TO THE TRIBAL TRANSIT PROGRAM) Any project activities involving spatial data or geographic information systems activities financed with Federal assistance are required to be consistent with the National Spatial Data Infrastructure promulgated by the Federal Geographic Data Committee, except to the extent that FTA determines otherwise in writing.

Geographic Preference - All project activities must be advertised without geographic preference, (except in A/E under certain circumstances, preference for hiring veterans on transit construction projects and geographic-based hiring preferences as proposes to be amended in 2 CFR Part 1201).

Federal Single Audit Requirements - For State Administered Federally Aid Funded Projects Only Non Federal entities that expend $750,000 or more in a year in Federal awards from all sources are required to comply with the Federal Single Audit Act provisions contained in U.S. Office of Management and Budget (OMB) Circular No. A 133, "Audits of States, Local Governments, and Non Profit Organizations" (replaced with 2 CFR Part 200,"Uniform Administrative Requirements, Cost Principles, and Audit Requirements for Federal Awards" effective December 26, 2014 as applicable). Non Federal entities that expend Federal awards from a single source may provide a program specific audit, as defined in the Circular. Non Federal entities that expend less than the amount above in a year in Federal awards from all sources are exempt from Federal audit requirements for that year, except as noted in Sec. 215 (a) of OMB Circular A-133 Subpart B--Audits, records must be available for review or audit by appropriate officials of the cognizant Federal agency the New York State Department of Transportation, the New York State Comptrollers Office and the U.S. Governmental Accountability Office (GAO). Non Federal entities are required to submit a copy of all audits, as described above, within 30 days of issuance of audit report, but no later than 9 months after the end of the entity's fiscal year, to the New York State Department of Transportation, Contract Audit Bureau, 50 Wolf Road, Albany, NY 12232. Unless a time extension has been granted by the cognizant Federal Agency and has been filed with the New York State Department of Transportation's Contract Audit Bureau, failure to comply with the requirements of OMB Circular A-133 may result in suspension or termination of Federal award payments. Catalog of Federal Domestic Assistance (CFDA) Identification Number The municipal project sponsor is required to identify in its accounts all Federal awards received and expended, and the Federal programs under which they were received. Federal program and award identification shall include, as applicable, the CFDA title and number, award number and year, name of the Federal agency, and name of the pass through entity.

Veterans Preference - As provided by 49 U.S.C. 5325(k), to the extent practicable, the Recipient agrees and assures that each of its Subrecipients: (1) Will give a hiring preference to veterans, as defined in 5 U.S.C. § 2108, who have the skills and abilities required to perform construction work required under a third party contract in connection with a Capital Project supported with federal assistance appropriated or made available for 49 U.S.C. chapter 53, and (2) Will not require an employer to give a preference to any veteran over any equally qualified applicant who is a member of any racial or ethnic minority, female, an individual with a disability, or a former employee.

Safe Operation of Motor Vehicles

a. Seat Belt Use. The Recipient agrees to implement Executive Order No. 13043, "Increasing Seat Belt Use in the United States," April 16, 1997, 23 U.S.C. § 402 note, (62 Fed. Reg. 19217), by: (1) Adopting and promoting on-the-job seat belt use policies and programs for its employees and other personnel that operate company-owned vehicles, company-rented vehicles, or personally operated vehicles, and (2) Including a "Seat Belt Use" provision in each third party agreement related to the Award. b. Distracted Driving, Including Text Messaging While Driving. The Recipient agrees to comply with: (1) Executive Order No. 13513, "Federal Leadership on Reducing Text Messaging While Driving," October 1, 2009, 23 U.S.C. § 402 note, (74 Fed. Reg. 51225), (2) U.S. DOT Order 3902.10, "Text Messaging While Driving," December 30, 2009, and (3) The following U.S. DOT Special Provision pertaining to Distracted Driving: (a) Safety. The Recipient agrees to adopt and enforce workplace safety policies to decrease crashes caused by distracted drivers, including policies to ban text messaging while using an electronic device supplied by an employer, and driving a vehicle the driver owns or rents, a vehicle Recipient owns, leases, or rents, or a privately-owned vehicle when on official business in connection with the Award, or when performing any work for or on behalf of the Award, (b) Recipient Size. The Recipient agrees to conduct workplace safety initiatives in a manner commensurate with its size, such as establishing new rules and programs to prohibit text messaging while driving, re-evaluating the existing programs to prohibit text messaging while driving, and providing education, awareness, and other outreach to employees about the safety risks associated with texting while driving, and (c) Extension of Provision. The Recipient agrees to include the preceding Special Provision of section 34.b(3)(a) – (b) of this Master Agreement in its third party agreements, and encourage its Third Party Participants to comply with this Special Provision, and include this Special Provision in each third party subagreement at each tier supported with federal assistance.

Catalog of Federal Domestic Assistance (CFDA) Identification Number - The municipal project sponsor is required to identify in its accounts all Federal awards received and expended, and the Federal programs under which they were received. Federal program and award identification shall include, as applicable, the CFDA title and number, award number and year, name of the Federal agency, and name of the pass through entity.

The CFDA number for the Federal Transit Administration - Nonurbanized Area Formula (Section 5311) is 20.509. A Recipient covered by the Single Audit Act Amendments of 1996 and OMB Circular A-133, "Audits of States, Local Governments, and Non-Profit Organizations," (replaced with 2 CFR Part 200,"Uniform Administrative Requirements, Cost Principles, and Audit Requirements for Federal Awards" effective December 26, 2014 as applicable) agrees to separately identify the expenditures for Federal awards under the Recovery Act on the Schedule of Expenditures of Federal Awards (SEFA) and the Data Collection Form (SF-SAC) required by OMB Circular A-133. The Recipient agrees to accomplish this by identifying expenditures for Federal awards made under Recovery Act separately on the SEFA, and as separate rows under Item 9 of Part III on the SF-SAC by CFDA number, and inclusion of the prefix "ARRA" in identifying the name of the Federal program on the SEFA and as the first characters in Item 9d of Part III on the SF-SAC.

Organizational Conflicts of Interest - The Recipient agrees that it will not enter into a procurement that involves a real or apparent

organizational conflict of interest described as follows: (1) When It Occurs. An organizational conflict of interest occurs when the Project work, without appropriate restrictions on certain future activities, results in an unfair competitive advantage: (a) To that Third Party Participant or another Third Party Participant performing the Project work, and (b) That impairs that Third Party Participant's objectivity in performing the Project work, or (2) Other. An organizational conflict of interest may involve other situations resulting in fundamentally unfair competitive conditions, (3) Disclosure Requirements. Consistent with FTA policies, the Recipient must disclose to FTA, and each of its Subrecipients must disclose to the Recipient: (a) Any instances of organizational conflict of interest, or (b) Violations of federal criminal law, involving fraud, bribery, or gratuity violations potentially affecting the federal award, and (4) Failure to Disclose. Failure to make required disclosures can result in remedies for noncompliance, including debarment or suspension.

Form 4906-B

Change of DBE Subcontractor Form

Prime Contractor: N/A

Contract No.:_____ DBE Goal: _____

Original contract amount: _____ Current contract amount: _____

In accordance with the DCTA DBE program, when adding, changing or deleting subcontractors or suppliers on projects, the DBE Substitution Form shall be used. All changes to the original list of approved subcontractors or suppliers shall be submitted to DCTA's DBELO or Project Manager for review and approval prior to the use of any substitute contractor and/or supplier.

Contractors shall make a good faith effort to replace DBE subcontractors or suppliers unable to perform on the project with another DBE certified firm.

1. Is the subcontractor/supplier being replaced a DBE firm? YES____ NO____

2. Reason the subcontractor/supplier is being replaced:

_____

_____

3. Dollar amount and scope of work: _____

4. Name of the subcontractor/supplier being replaced:

_____

Contact Person:_____ Telephone No.:(____) _____

5. Percent of work/material that was completed/supplied by above named subcontractor /suppliers:_____

6. Amount paid to the subcontractor/supplier (if any) $_____

7. Document the efforts made to replace or add DBE subcontractors to perform required work_____

8. Name of substitute subcontractor/supplier:_____

Address:_____ Telephone: (____) _____

DBE Certified: YES____ NO_____

Contact Person:_____

This form should be completed and submitted to the DCTA DBELO for each subcontractor or supplier being added, deleted or changed. The same criterion used for establishing good faith efforts in maximizing the participation of DBE's prior to awarding this contract will also apply to the substitution of DBE subcontractors or suppliers during the performance of the contract.

Revised June 2015

DCTA

COMMITMENT AGREEMENT FORM FOR ALL SUBCONTRACTORS

(Please complete one form for each subcontractor)

This commitment is subject to the award and receipt of a signed contract from the Denton County Transportation Authority for the subject project. This form must be completed and submitted with bid/offer.

Project Description:	N/A	**Contract No:**	

Items of work/service to be performed* (attach a list of work/service items, if more room is required):

Work/Service Description	NAICS	Unit Price	Quantity/Percentage	Total Per Item
				$ -
				$ -
				$ -
				$ -
				$ -
				$ -
				$ -
				$ -
				$ -
				$ -
				$ -
				$ -
				$ -
				$ -
				$ -

IMPORTANT! The signatures of the prime contractor, the subcontractor, and the total commitment amount must always be on the same page.

Prime Contractor:		**Name:**	
Contact Name:		**Title:**	
Address:		Signature:	
City:	ST, Zip		
Phone:	Fax:		
Email:		Date:	
Subcontractor:		**Name:**	
Federal ID:			
☐ 8(a) ☐ DBE ☐ MBE ☐ WBE ☐ SBE ☐ Non-Minority		**Title:**	
Certification Number:			
Contact Name:		Signature:	
Address:			
City:	ST, Zip:		
Phone:	Fax:		
Email:		Date:	
2nd Tier Sub:		**Name:**	
Federal ID:			
☐ 8(a) ☐ DBE ☐ MBE ☐ WBE ☐ SBE ☐ Non-Minority		**Title:**	
Certification Number:			
Contact Name:		Signature:	
Address:			
City:	ST, Zip:		
Phone:	Fax:		
Email:		Date:	

To ensure prompt and efficient handling of your project file, we are requesting that all commitments be presented to the DCTA DBELO using this form.

Revised June 2015

DISADVANTAGED BUSINESS ENTERPRISE PROVISIONS

I. Bidder/Proposer Information

Policy Statement: It is the policy of Denton County Transportation Authority and the Department of Transportation with respect to DOT-assisted contracts that Disadvantaged Business Enterprises as defined in 49 CFR Part 26 shall have the maximum opportunity to participate in the performance of DCTA contracts. DCTA also encourages the use of small business enterprises in performance on all contracts.

To attain these policy objectives, DCTA's overall agency goal for DBE participation is 7 % of federally funded contract amounts.

DBE Obligation: DCTA and its contractors agree to ensure that DBEs as defined in 49 CFR Part 26 have the maximum opportunity to participate in the performance of contracts and subcontracts awarded by DCTA. In this regard, DCTA and its contractors shall take all necessary and reasonable steps in accordance with 49 CFR Part 26 to ensure that DBEs have the maximum opportunity to compete for and perform contracts. DCTA and its contractors shall not discriminate on the basis of race, color, national origin, or sex in the award and performance of DCTA contracts, including DOT-assisted contracts.

It is the policy of the Denton County Transportation Authority (DCTA) to ensure that DBEs as defined in part 26, have an equal opportunity to receive and participate in DOT-assisted contracts. It is also our policy:

1. To ensure nondiscrimination in the award and administration of DOT - assisted contracts;
2. To create a level playing field on which DBEs can compete fairly for DOT-assisted contracts;
3. To ensure that the DBE Program is narrowly tailored in accordance with applicable law;
4. To ensure that only firms that fully meet 49 CFR Part 26 eligibility standards are permitted to participate as DBEs;
5. To help remove barriers to the participation of DBEs in DOT assisted contracts;
6. To assist the development of firms that can compete successfully in the market place outside the DBE Program.

"Disadvantaged Business Enterprise (DBE)" means a for-profit small business concern which (a) is at least 51 percent owned by one or more individuals who are both socially and economically disadvantaged, or, in the case of any publicly owned business in which 51 percent of the stock is owned by one or more such individuals, (b) whose management and daily business operations are controlled by one or more of the socially and economically disadvantaged individuals who

own it, and (c) is a small business concern as defined by the U.S. Small Business Administration (SBA).

DCTA shall make a refutable presumption that individuals in the following groups are socially and economically disadvantaged. DCTA may also determine, on a case-by-case basis, that individuals who are not a member of one of the following groups are DBEs:

1. Black Americans
2. Hispanic Americans
3. Native Americans
4. Asian-Pacific Americans
5. Subcontinent Asian Americans
6. Women, regardless of race, ethnicity, or origin
7. Any additional groups whose members are designated as socially and economically disadvantaged by the Small Business Administration.

Breach of Contract. All sub recipients, subcontractors, or contractors are advised that failure to carry out the requirements set forth in the Program shall constitute a breach of contract, and, after DOT is notified (on DOT-assisted agreements and/or contracts), may result in termination by DCTA of the agreement or contract, debarment, and/or such other remedy as DCTA deems appropriate.

DCTA has a written document that fully describes its DBE policy and program. The document is available upon request at the following address:

DCTA DBE Liaison Officer
1955 Lakeway Drive, Suite 260
Lewisville, Texas 75057

DCTA's DBE Program can be found at https://www.dcta.net/about-dcta/procurement-opportunities/dcta-disadvantaged-business-enterprise-program

II. Compliance Requirements

Compliance with the DBE Policy and Program is essential in order for a Bidder/Proposer to be eligible to enter into a contract with DCTA. Compliance consists of:

a. Meeting or exceeding the DCTA DBE percentage participation goals established for this solicitation; or
b. Demonstrating "Good Faith Efforts" to meet such participation goals; or
c. Demonstrating that the solicitation comes within the exception to the DBE percentage participation goals as being procurement for a standard manufactured item or other similar procurement not open to subcontracting opportunities.

In order to demonstrate compliance through "Good Faith Efforts", a Bidder/Proposer must submit with its bid/proposal sufficient information to enable DCTA to determine that the efforts made by the Bidder/Proposer to obtain DBE participation were such efforts that a Bidder/Proposer actively and aggressively seeking to meet those goals would make.

Actions or efforts, which are merely "pro forma" or "going through the motions," do not constitute "Good Faith Efforts" to obtain the participation of DBEs. Similarly, even efforts which are sincerely motivated but which, given all circumstances relevant to the particular solicitation, could not be reasonably expected to produce a level of DBE participation sufficient to meet the goal do not constitute "Good Faith Efforts." In determining whether a Bidder/Proposer made a Good Faith Effort to obtain the DBE participation percentage goal, DCTA will look at not only the different kinds of efforts that the Bidder/Proposer has made, but also the quality and intensity of these efforts.

To assist DCTA in making the required judgment concerning fulfillment of "Good Faith Efforts," the Department of Transportation has prepared a list illustrating the kinds of actions, which would indicate that a Bidder/Proposer has made a Good Faith Effort. These kinds of efforts include:

a. Whether the Bidder/Proposer attended pre-bid meetings that were scheduled by DCTA to inform DBEs of contracting and sub-contracting opportunities; or
b. Whether the Bidder/Proposer selected portions of the work to be performed by certified DBEs in order to increase the likelihood of meeting the DBE goal (including, where appropriate, breaking down contracts into economically feasible units to facilitate DBE participations); or
c. Whether the Bidder/Proposer advertised in general circulation, trade association, and/or minority focus media concerning the sub-contracting opportunities; or
d. Whether the Bidder/Proposer provided written notice to a reasonable number of specified DBEs that their interest in the procurement was being solicited, in sufficient time to allow such DBEs to participate effectively, or
e. Whether the Bidder/Proposer followed up initial solicitation of interest by contacting DBEs to determine with certainty whether the DBEs were interested; or
f. Whether the Bidder/Proposer provided interested DBEs with adequate information about the plans, specifications, and requirements of the solicitation; or
g. Whether the Bidder/Proposer negotiated in good faith with interested DBEs, not rejecting DBEs as unqualified without sound reasons based on their investigation of the capabilities; or
h. Whether the Bidder/Proposer made efforts to assist interested DBEs in obtaining bonding, lines of credit, or insurance required by DCTA or the Bidder/Proposer as Contractor; or
i. Whether the Bidder/Proposer effectively used the services of available minority community organizations; minority contractor groups; local, state, and federal minority business assistance offices; and other organizations that provide assistance in the recruitment and placement of DBEs.

The above criterion is not intended to be an inventory or checklist. DCTA does not require any Bidder/Proposer to do any particular one or any combination of the items on the above list. It is not intended to be an exclusive or exhaustive list of all steps a Bidder/Proposer, acting in good faith, actively and aggressively seeking to obtain DBE participation would make. Other types of efforts or factors may be relevant in appropriate cases.

Competitors that fail to meet DBE goals and fail to demonstrate ""Good Faith Efforts"" may be considered non-responsive to the specifications and may be considered not eligible to be awarded the contract.

To ensure that all obligations under contracts awarded to DBEs are met, DCTA shall review the contractor's DBE involvement efforts during the performance of the contract. The contractor shall bring to the attention of DCTA any situation in which regularly scheduled progress payments are not made to DBE contractors.

III. Compliance Documentation

To demonstrate compliance with DCTA DBE Policy and Program, it is essential that all required documentation be submitted with the bid/proposal. This documentation consists of the following fully completed forms: DCTA Commitment Agreement Form 4906, and DCTA Good Faith Effort Form GFE, which appear in this Attachment, and additional relevant documentation and information where specified.

DCTA DBE Commitment Agreement Form 4906 **must** be completed by **all** Bidders/Proposers. DCTA Good Faith Effort Documentation also must be completed by a Bidder/Proposer who does not meet the DBE percentage participation goals established for this procurement but who wishes to show compliance with the Policy and Program because of having made Good Faith Efforts to meet those goals.

All information relative to the particular method of Bidder/Proposer's compliance as set out in this document **must be submitted with the bid/proposal**. Any bidder/proposer may also include any additional information it believes would be helpful in demonstrating to DCTA its compliance with DCTA DBE Policy Program. **Information submitted after the deadline for the submission of bids will not be considered.**

IV. Counting Participation Toward Meeting DBE Goal

DBE participation shall be counted toward meeting goals set in accordance with DOT's DBE regulations at 49 CFR Part 26 and DCTA's program as follows:

(a) When a DBE participates in a contract, you count only the value of the work actually performed by the DBE toward DBE goals.

(1) Count the entire amount of that portion of a construction contract (or other contract not covered by paragraph (a)(2) of this section) that is performed by the DBE's own forces. Include the cost of supplies and materials obtained by the DBE for the work of the contract, including supplies purchased or equipment leased by the DBE (except supplies and equipment the DBE subcontractor purchases or leases from the prime contractor or its affiliate).

(2) Count the entire amount of fees or commissions charged by a DBE firm for providing a bona fide service, such as professional, technical, consultant, or managerial services, or for providing bonds or insurance specifically required for the performance of a DOT-assisted contract, toward DBE goals, provided you determine

the fee to be reasonable and not excessive as compared with fees customarily allowed for similar services.

(3) When a DBE subcontracts part of the work of its contract to another firm, the value of the subcontracted work may be counted toward DBE goals only if the DBE's subcontractor is itself a DBE. Work that a DBE subcontracts to a non-DBE firm does not count toward DBE goals.

(b) When a DBE performs as a participant in a joint venture, count a portion of the total dollar value of the contract equal to the distinct, clearly defined portion of the work of the contract that the DBE performs with its own forces toward DBE goals.

(c) Count expenditures to a DBE contractor toward DBE goals only if the DBE is performing a commercially useful function on that contract.

(1) A DBE performs a commercially useful function when it is responsible for execution of the work of the contract and is carrying out its responsibilities by actually performing, managing, and supervising the work involved. To perform a commercially useful function, the DBE must also be responsible, with respect to materials and supplies used on the contract, for negotiating price, determining quality and quantity, ordering the material, and installing (where applicable) and paying for the material itself. To determine whether a DBE is performing a commercially useful function, you must evaluate the amount of work subcontracted, industry practices, whether the amount the firm is to be paid under the contract is commensurate with the work it is actually performing and the DBE credit claimed for its performance of the work, and other relevant factors.

(2) A DBE does not perform a commercially useful function if its role is limited to that of an extra participant in a transaction, contract, or project through which funds are passed in order to obtain the appearance of DBE participation. In determining whether a DBE is such an extra participant, you must examine similar transactions, particularly those in which DBEs do not participate.

(3) If a DBE does not perform or exercise responsibility for at least 30 percent of the total cost of its contract with its own work force, or the DBE subcontracts a greater portion of the work of a contract than would be expected on the basis of normal industry practice for the type of work involved, you must presume that it is not performing a commercially useful function.

(4) When a DBE is presumed not to be performing a commercially useful function as provided in paragraph (c)(3) of this section, the DBE may present evidence to rebut this presumption. You may determine that the firm is performing a commercially useful function given the type of work involved and normal industry practices.

(5) Your decisions on commercially useful function matters are subject to review by the concerned operating administration, but are not administratively appealable to DOT.

(d) Use the following factors in determining whether a DBE trucking company is performing a commercially useful function:

(1) The DBE must be responsible for the management and supervision of the entire trucking operation for which it is responsible on a particular contract, and there

cannot be a contrived arrangement for the purpose of meeting DBE goals.

(2) The DBE must itself own and operate at least one fully licensed, insured, and operational truck used on the contract.

(3) The DBE receives credit for the total value of the transportation services it provides on the contract using trucks it owns, insures, and operates using drivers it employs.

(4) The DBE may lease trucks from another DBE firm, including an owner-operator who is certified as a DBE. The DBE who leases trucks from another DBE receives credit for the total value of the transportation services the lessee DBE provides on the contract.

(5) The DBE may also lease trucks from a non-DBE firm, including from an owner-operator. The DBE who leases trucks from a non-DBE is entitled to credit for the total value of transportation services provided by non-DBE lessees not to exceed the value of transportation services provided by DBE-owned trucks on the contract. Additional participation by non-DBE lessees receives credit only for the fee or commission it receives as a result of the lease arrangement. If a recipient chooses this approach, it must obtain written consent from the appropriate Department Operating Administration.

(6) For purposes of this paragraph (d), a lease must indicate that the DBE has exclusive use of and control over the truck. This does not preclude the leased truck from working for others during the term of the lease with the consent of the DBE, so long as the lease gives the DBE absolute priority for use of the leased truck. Leased trucks must display the name and identification number of the DBE.

(e) Count expenditures with DBEs for materials or supplies toward DBE goals as provided in the following:

(1)(i) If the materials or supplies are obtained from a DBE manufacturer, count 100 percent of the cost of the materials or supplies toward DBE goals.

(ii) For purposes of this paragraph (e)(1), a manufacturer is a firm that operates or maintains a factory or establishment that produces, on the premises, the materials, supplies, articles, or equipment required under the contract and of the general character described by the specifications.

(2)(i) If the materials or supplies are purchased from a DBE regular dealer, count 60 percent of the cost of the materials or supplies toward DBE goals.

(ii) For purposes of this section, a regular dealer is a firm that owns, operates, or maintains a store, warehouse, or other establishment in which the materials, supplies, articles or equipment of the general character described by the specifications and required under the contract are bought, kept in stock, and regularly sold or leased to the public in the usual course of business.

(A) To be a regular dealer, the firm must be an established, regular business that engages, as its principal business and under its own name, in the purchase and sale or lease of the products in question.

(B) A person may be a regular dealer in such bulk items as petroleum products, steel, cement, gravel, stone, or asphalt without owning, operating, or maintaining a place of business as provided in this paragraph (e)(2)(ii) if the person both owns and operates distribution equipment for the products. Any supplementing of regular dealers' own distribution equipment shall be by a long-term lease agreement and not on an ad hoc or contract-by-contract basis.

(C) Packagers, brokers, manufacturers' representatives, or other persons who arrange or expedite transactions are not regular dealers within the meaning of this paragraph (e)(2).

(3) With respect to materials or supplies purchased from a DBE which is neither a manufacturer nor a regular dealer, count the entire amount of fees or commissions charged for assistance in the procurement of the materials and supplies, or fees or transportation charges for the delivery of materials or supplies required on a job site, toward DBE goals, provided you determine the fees to be reasonable and not excessive as compared with fees customarily allowed for similar services. Do not count any portion of the cost of the materials and supplies themselves toward DBE goals, however.

(f) If a firm is not currently certified as a DBE in accordance with the standards of subpart D of this part at the time of the execution of the contract, do not count the firm's participation toward any DBE goals, except as provided for in § 26.87(i)).

(g) Do not count the dollar value of work performed under a contract with a firm after it has ceased to be certified toward your overall goal.

(h) Do not count the participation of a DBE subcontractor toward a contractor's final compliance with its DBE obligations on a contract until the amount being counted has actually been paid to the DBE.

V. Termination/Substitution of a DBE

Denton County Transportation Authority (DCTA) requires that prime contractors not terminate a DBE subcontractor listed on a bid/contract with a DBE contract goal without DCTA'S PRIOR written consent. Prior written consent will only be provided where there is "good cause" for termination of the DBE firm, as established by Section 26.53(f)(3) of the DBE regulation.

The contractor shall utilize the specific DBE's listed to perform the work and supply the materials for which each is listed unless the contractor obtains written consent from DCTA. Without written consent by DCTA, the contractor shall not be entitled to any payment for work or material unless it is supplied by the listed DBE.

Before transmitting to Denton County Transportation Authority (DCTA) its request to terminate, the prime contractor must give notice in writing to the DBE subcontractor, with a copy to DCTA, of its intent to request to terminate and/or substitute, and the reason for the request. A copy of this notice must be provided to Denton County Transportation Authority (DCTA) prior to consideration of the request to terminate. The DBE will then have five (5) days to respond and advise Denton

County Transportation Authority (DCTA) of why it objects to the proposed termination.

In those instances where "good cause" exists to terminate a DBE's contract, Denton County Transportation Authority (DCTA) will require the prime contractor to make good faith efforts to find another DBE subcontractor to substitute for the original subcontractor. These good faith efforts shall be directed at finding another DBE to perform at least the same amount of work under the contract as the DBE that was terminated, to the extent needed to meet the contract goal established for the procurement. The good faith efforts shall be documented by the contractor. We will require the prime contractor to notify the DBE Liaison officer immediately of the DBE's inability or unwillingness to perform and provide reasonable documentation. Contractor is required to submit Form 4906B Change of Subcontractor Form to DCTA for review and approval.

In this situation, DCTA will require the prime contractor to obtain prior approval of the substitute DBE and to provide copies of new or amended subcontracts, or documentation of good faith efforts.

If the contractor fails or refuses to comply in the time specified, DCTA's contracting officer may issue an order stopping all or part of payment/work until satisfactory action has been taken. If the contractor still fails to comply, the contracting officer may issue a termination for default proceeding.

VI. Monitoring Payments to DBEs

We will require prime contractors to maintain records and documents of payments to DBEs for three years following the performance of the contract. These records will be made available for inspection upon request by any authorized representative of the Denton County Transportation Authority (DCTA) or DOT. This reporting requirement also extends to any certified DBE subcontractor.

We will perform interim audits of contract payments to DBEs. The audit will review payments to DBE subcontractors to ensure that the actual amount paid to DBE subcontractors equals or exceeds the dollar amounts stated in the schedule of DBE participation.

The contractor is required to submit Form 4907 Monthly Subcontractor Progress Report to DCTA no later than the 10th calendar day of the month for the previous month activity.

At the completion of the project the contractor will be required to submit Form 4908 Subcontractor final Report to DCTA for review and approval.

VII. Transit Vehicle Manufacturers

Only those transit vehicle manufacturers listed on FTA's certified list of Transit Vehicle Manufacturers, or that have submitted a goal methodology to FTA that has been approved or has not been disapproved, at the time of solicitation are eligible to bid.

A TVM's failure to implement the DBE Program in the manner as prescribed in this section and throughout 49 CFR part 26 will be deemed as non-compliance, which will result in removal from FTA's certified TVMs list, resulting in that manufacturer becoming ineligible to bid.

FTA recipient's failure to comply with the requirements set forth in paragraph (a) of this section may result in formal enforcement action or appropriate sanction as determined by FTA (e.g., FTA declining to participate in the vehicle procurement).

DCTA is required to submit within 30 days of making an award, the name of the successful bidder, and the total dollar value of the contract in the manner prescribed in the grant agreement.

If you are a transit vehicle manufacturer, you must establish and submit for FTA's approval an annual overall percentage goal.

The requirements of this part with respect to submission and approval of overall goals apply to you as they do to recipients.

Transit vehicle manufacturers awarded must comply with the reporting requirements of §26.11 of this part including the requirement to submit the Uniform Report of Awards or Commitments and Payments, in order to remain eligible to bid on FTA assisted transit vehicle procurements.

Transit vehicle manufacturers must implement all other applicable requirements of this part, except those relating to UCPs and DBE certification procedures.

Denton County
Transportation Authority

Bid 20-13

Form 4907

DENTON COUNTY TRANSPORTATION AUTHORITY
MONTHLY SUBCONTRACTOR PROGRESS REPORT

N/A

Contract No.:	number	Reporting Period (M/D/Yr to M/D/Yr)	date to date
Contractor:	Name	Original Contract Amount:	$ -
DBE Goal:	0.00%	Current Contract Amount:	$ -
DBE Goal Attained to Date:	0.0%	DBE Goal Dollars:	
DBE Payments/ Spend to Prime	0.0%	Current Spend to Prime	

Name of Subcontractor/Supplier	Type of Work/Service performed	Amount Paid This Period to Subcontractor	Date of Payment mm/dd/yyyy	Amount Paid To Date to Subcontractor
DBE Certified Firms:				
		$ -		$ -
		$ -		$ -
		$ -		$ -
		$ -		$ -
		$ -		$ -
		$ -		$ -
		$ -		$ -
	DBE Firm Totals:	$ -		$ -
SBE Firms:				
		$ -		$ -
		$ -		$ -
		$ -		$ -
		$ -		$ -
		$ -		$ -
		$ -		$ -
	SBE Firm Totals:	$ -		$ -
Non-Minority Firms:				
		$ -		$ -
		$ -		$ -
		$ -		$ -
		$ -		$ -
		$ -		$ -
		$ -		$ -
		$ -		$ -
	Non-Minority Firm Totals:	$ -		$ -

Include payments to all certified DBEs, SBE's and all Non-Minority firms during the period noted above.

If using a non-minority hauling firm that leases from DBE truck owner-operators, payments made to each owner-operator must be reported.

Any changes to the original commitments previously approved by the department must be reported to DCTA's DBELO.

For projects with assigned DBE Goals, submission of this report for periods of negative DBE activity is required. This report is required until all subcontracting or material supply activity is completed. ***This report must be submitted to DCTA each month with your monthly invoices***.

I hereby certify that the above is a true and correct statement of the amounts paid to all the firms listed above.

Signature: Bailey Bibb — Authorized Company Official; 04/29/2020 — Date; 214.277.1590 — Phone Number

The DCTA maintains the information collected through this form.

Revised June 2015

Form 4908

DCTA

DENTON COUNTY TRANSPORTATION AUTHORITY
SUBCONTRACTOR FINAL REPORT

Contract No.:	number	Original Contract Amount:	$ -
Contractor:	Name	Final Contract Amount:	$ -
DBE Goal:	0.00%	DBE Goal Amount:	$ -
		Goal Amount Attained to Date:	$ -

Name of Subcontractor/Supplier	SBE, DBE, Non-Minority	Amount Paid To Subcontractor to Date
DBE Certified Firms:		
		$ -
		$ -
		$ -
		$ -
		$ -
		$ -
		$ -
	Total:	$ -
SBE Firms:		
		$ -
		$ -
		$ -
		$ -
	Total:	$ -
Non-Minority Firms:		
		$ -
		$ -
		$ -
		$ -
		$ -
		$ -
	Total:	$ -

* Include payments to all **NON-MINORITY** and certified DBEs, and SBEs.

This is to certify that 0.0% of the work was completed by DBE firms, as stated above.

IF THE GOAL WAS NOT ATTAINED, THEN ATTACH DOCUMENTATION THAT EXPLAINS THE REASONING.

Signature of General Contractor: Bailey Bible Date: 04/29/2020

Marjorie Ann Sims
My Commission Expires
03/30/2024
ID No. 128938667

AFFIX NOTARY SEAL ABOVE

Sworn to and subscribed before me, by the said BAILEY BIBLE, this the 29th day of April, 2020, to certify which, witness my hand and seal of office.

Signature of Notary Public:

Printed Name of Notary Public: Marjorie Sims

The DCTA maintains the information collected through this form.

Revised June 2015

DCTA

GOOD FAITH EFFORT FORM

If you have failed to secure DBE participation and you have subcontracting and/or supplier opportunities or if you're DBE participation is less than the DCTA's project goal, you must complete this form.

Prime Company Name (please print): Industrial Power LLC.	**DCTA Contract Number:** 20-13
	DCTA Contract Goal: 0 %
Check applicable response to describe prime:	**DBE:** (yes ☐) **Certifying Entity:** (no ☒)

If the bidder's method of compliance with the DBE goal is based upon demonstration of a "good faith effort", the bidder will have the burden of correctly and accurately preparing and submitting the documentation required by the DCTA. Compliance with items 1 through 6 as it appears on the Good Faith Effort Form, in its entirety shall satisfy the good faith effort requirement upon verification by DCTA's staff and confirmation of no counterfeit information, intentional and/or knowing misrepresentation of facts or intentional discrimination by the contractor.

Failure to complete this form, in its entirety with supporting documentation, and received by the DBE Liaison, will result in the bid being considered non-responsive to bid specifications. Please list each and every subcontracting and/or supplier opportunity for the completion of this project, regardless of whether it is to be provided by a DBE or non-DBE. (DO NOT LIST NAMES OF FIRMS).

1. Please list each and every (subcontracting and/or supplier opportunity) for the completion of this project, regardless of whether it is to be provided by a DBE or non DBE (DO NOT LIST NAMES OF FIRMS). **List opportunities only**.

(Use additional sheets, if necessary)

List of Subcontracting Opportunities:	List of Supplier Opportunities:

2. Did you obtain a current (**not more than 60 days old from the initial response to the DCTA's solicitation due date)** list of DBE subcontracts and/or suppliers from the DCTA DBE Liaison?

(yes ☐) (no ☒)

DBE listing request date to the DCTA DBELO : ____ / ____ /20____

3. Did you solicit bids from DBE firms, within the subcontracting and/or supplier areas previously listed by mail?

(yes ☐) (no ☐)

Attach the DBE mail listing including a dated copy of the letter mailed, or email correspondence showing proof of solicitation to DBE firms. **If you did not fulfill, please write the following statement: "I did not comply"**

4. Did you solicit bids from DBE firms within the subcontracting and/or supplier areas previously listed by telephone?

(yes ☐) (no ☐)

Attach DBE contact list to include: DBE firm, person contacted, telephone number, date and time of contact. **If you did not fulfill, please write the following statement: "I did not comply"**

NOTE: A facsimile may be used to comply with either 3 or 4 but may **not** be used for both. If a facsimile is used, attach the fax confirmation, which is to provide: DBE name, date, time, fax number and documentation faxed.

NOTE: If the list of DBE firms for a particular subcontracting/supplier opportunity is ten (10) or less, the contractor must contact the entire list to be in compliance with item 3 and 4. If the list of DBE firms for a particular subcontracting/supplier opportunity is ten (10) or more, the contractor must contact at least two/thirds (2/3) of the list within such area of opportunity, but not less than ten to be in compliance with items 3 and 4.

5. Did you provide plans and specifications to potential DBE firms or information regarding the location of plans and specifications in order to assist the DBE firms?

(yes ☐) (no ☐)

6. Submit documentation if DBE firms were rejected. The documentation submitted should be in the form of an affidavit, include a detailed explanation of why the DBE firms were rejectedand any supporting documentation the contractor wishes to be considered by the DCTA. In the event of an actual dispute concerning quotes, the contractor will provide for confidential access to and inspection of any relevant documentation by DCTA Legal representative. **(Please use additional sheets, if necessary and attach)**

Company Name	Telephone	Contact Person	Scope of Work	Reason for Rejection

ADDITIONAL INFORMATION:

Please provide additional information you feel will further explain your good and honest efforts to obtain DBE participation on this project

The bidder further agrees to provide, directly to the DCTA upon request, complete and accurate information regarding actual work performed on this contract, the payment thereof and any proposed changes to the original arrangements submitted with this bid. The bidder also agrees to allow an audit and/or examination of any books, records and files held by their company that will substantiate the actual work performed on this contract, by an authorized DCTA employee.
Any intentional and/or knowing misrepresentation of facts will be grounds for terminating the contract or debarment from DCTA work for a period of not less than three (3) years and for initiating action under laws concerning false statements. Any breach of contract may result in a determination of an irresponsible offeror and barred from participating in DCTA work for a period of time not less than one (1) year.

The undersigned certifies that the information provided and the listed was/were contacted in good faith. It is understood that any DBE firms listed on the Good Faith Effort Form will be contacted and the reasons for not using them will be verified by the DCTA DBELO.

Authorized Signature: Bailey Bible	**Printed Signature:** Bailey Bible
Title: Account Manager	**Contact Name and Title (if different):**
Company Name: Industrial Power	**Phone Number:** 214.277.1590
Street Address: 712 N. Beach St.	**Email Address:** BaileyB@IPTruck.com
City/County/State and Zip Code Fort Worth / Tarrant / Tx 76111	**Date:** April 29 20 20
DCTA DBELO Authorized Signature:	**Date:** , 20

INDUSTRIAL TRUCK & EQUIPMENT POWER

Headquarter Location:

Ft. Worth: 712 North Beach Street

Fort Worth, TX 76111

Ft. Worth Industrial Power Main Line:

PH: (817) 834-7473 Fax: (817) 834-1516

Body/Paint Shop Service Advisor (Estimates, Repairs and Warranty work)- Eli Colon:

(817) 546-7596

Body/Paint Shop Manager (Workmanship Concerns/Questions)- Greg Smith:

(817)546-7579

Parts Manager (Main POC)- Clay Moore:

(817) 546-7590

claym@iptruck.com

Medium Shop Manager- Trexal Smith:

(817) 546-7609

Heavy Shop Service Advisor (Estimates, Repairs and Warranty Work)-

Secondary Location:

McKinney: 436 Power House Street

McKinney, TX 75071

McKinney Industrial Power Main Line:

PH: (972) 632-3737 Fax: (972)632-3735

Parts Manager- Mark Hillegass:

(972) 632-3742

markh@iptruck.com

Service Manager- Chris McQuade:

(972) 632-3732

Service Advisor Medium/Heavy Shop (Estimates, Repairs and Warranty work)- Scott Hodgson:

(972)632-3731

Fixed Operations Director- Ken Drake:

(972) 632-3737

Shannon Mitchel: (817)546-7584

Municipality Account Manager-(Main POC for contract related questions or concerns/problems)-Over All Locations

- **Bailey Bible:** (214)-277-1590

Baileyb@iptruck.com

Heavy Shop Manager-

Josh Whinery: (817) 546-7582

Service Director over all locations-

Kris Morris: (817) 546-7580

Municipality Account Manager-(Main POC for contract related questions or concerns/problems)-Over All Locations

Bailey Bible: (214)-277-1590

Baileyb@iptruck.com

Solicitation 20-13

Cummins Auto Parts Bid

Bid Designation: Public

Denton County Transportation Authority

Regular Item 5, Exhibit 3

User: 33705mhillegass | Contact Us

Parts Catalog - Option Detail

Electronic Parts Catalog - Option Detail				
Option	**Group**	**Graphic**	**Film Card**	**Date**
2888132	11.01.1	28906gi	Z	23-MAY-13
Engines	6C8.3, C GAS PLUS CM556, G8.3, G8.3 CM558, GTA8.3 CM558, ISC CM2150, ISC CM554, ISC CM850, ISC8.3 CM2250, ISC8.3 G CM2180 C101, ISL CM2150, ISL CM554, ISL CM850, ISL G CM2180, ISL8.9 CM2150 L110, ISL8.9 CM2880 L112, ISL9 CM2150 SN, ISL9 CM2250, ISL9 CM2350 L101, ISL9 CM2350 L111, ISLE4 CM850, L GAS PLUS CM556, L8.9, L8.9 L121, L8.9G CMOH2.0 L125B, L9 CM2350 L116B, L9 CM2350 L119B, L9 CM2350 L120C, L9 CM2350 L123B, L9.3 L105, L9.5 L117, L9N CM2380 L124B, QSC8.3 CM2250, QSC8.3 CM2880 C102, QSC8.3 CM554, QSC8.3 CM850(CM2850), QSL9 CM2250, QSL9 CM2250 L115, QSL9 CM2350 L102, QSL9 CM2350 L107, QSL9 CM2350 L118, QSL9 CM2350 L122, QSL9 CM554, QSL9 CM850(CM2850), QSL9 G CM558, QSL9 M CM2250 L106, QSL9.3 CM2880 L113			

SMALL | MEDIUM | LARGE

View My Cart

Cart	Ref No	Part Number	Part Description	Required	Remarks
					DEVICE,AFTERTREATMENT
☐		2888132	Device, Aftertreatme	1	
☐	1	2871452	Aftertreatment Device Gasket	3	
☐	2	2871862	V Band Clamp	3	
☐	3	2888291	Regular Hexagon Nut	1	
☐	4	2888130	Inlet Module	1	
☐	5	2888131	Outlet Module	1	
☐	6	4902912	Temperature Sensor	1	Diesel Particulate Filter.
☐	7	4954893	Oxygen Sensor	1	Oxygen
☐	8	4965090	Clip	2	
☐	9	4965326	Hexagon Head Cap Screw	1	
☐	10	4969771	Catalyst Module	2	

© 2020 Cummins Inc., Box 3005, Columbus, IN 47202-3005 U.S.A.
Terms of Use and Disclaimers | Recommended System Requirements
Need Assistance? Please click on the Contact Us button in the top right corner of any page.

Regular Item 5, Exhibit 3

Parts Catalog - Option Detail

Electronic Parts Catalog - Option Detail				
Option	**Group**	**Graphic**	**Film Card**	**Date**
PE1029	11.01.1	pe100gl	SS	26-AUG-10
Engines	ISX CM570, ISX CM870, ISX CM871, ISX CM871 E, ISX15 CM2250, ISX15 CM2250 SN, ISX15 CM2350 X101, ISX15 CM2350 X129, ISZ13 CM2150 SN, QSX11.9 CM2250 ECF, QSX15 CM2250, QSX15 CM2250 ECF, QSX15 CM2250 X115, QSX15 CM2350 X105, QSX15 CM2350 X106, QSX15 CM2350 X118, QSX15 CM2350 X130, QSX15 CM2350 X131, QSX15 CM570, QSZ13 CM2150 Z101, QSZ13 CM2150 Z102, R2.8 CM2220 R101B, X12 CM2350 X119B, X15 CM2350 X114B, X15 CM2350 X116B, X15 CM2350 X125M, X15 CM2350 X132C			

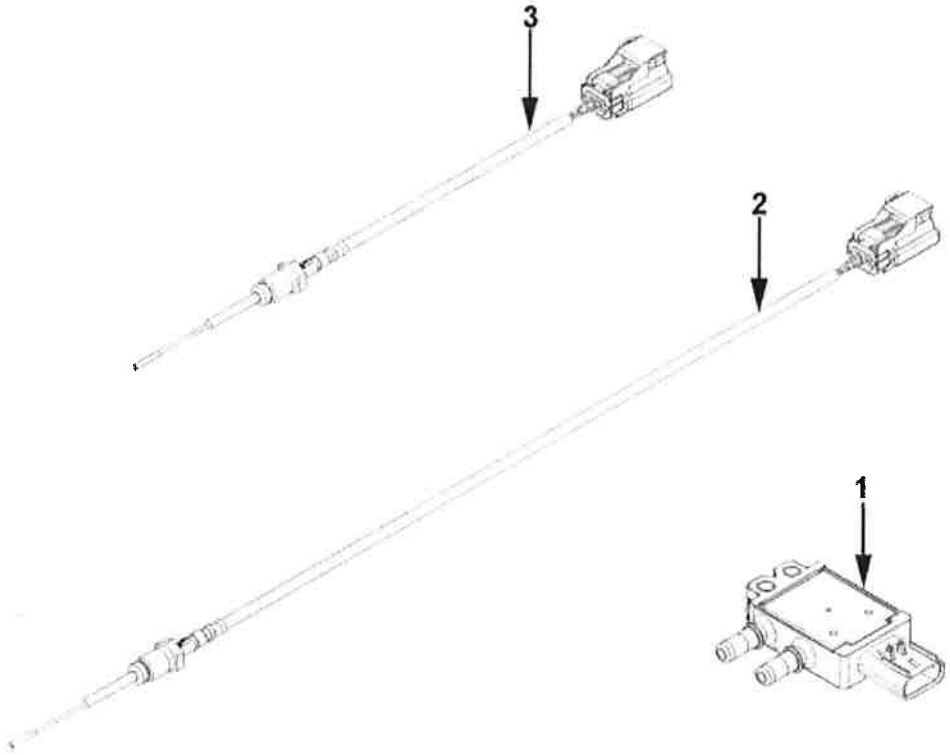

pe100gl

SMALL | MEDIUM | LARGE

Cart	Ref No	Part Number	Part Description	Required	Remarks
View My Cart	Emissions Catalog				
		PE1029	Aftertreatment Device		
					Aftertreatment Device
☐	1	2871960	Differential Pressure Sensor	1	Diesel Particulate Filter.

☐	2	2872467	Temperature Sensor	1	Aftertreatment Inlet/Outlet
☐	3	2872468	Temperature Sensor	2	Aftertreatment inlet/outlet

© 2020 Cummins Inc., Box 3005, Columbus, IN 47202-3005 U.S.A.
Terms of Use and Disclaimers | Recommended System Requirements
Need Assistance? Please click on the Contact Us button in the top right corner of any page.

Regular Item 5, Exhibit 3

User: 33705mbilliegass | Contact Us

Parts Catalog - Option Detail

Electronic Parts Catalog - Option Detail				
Option	**Group**	**Graphic**	**Film Card**	**Date**
PE85998	11.01.1	pe936ge	COE	14-JAN-13
Engines				

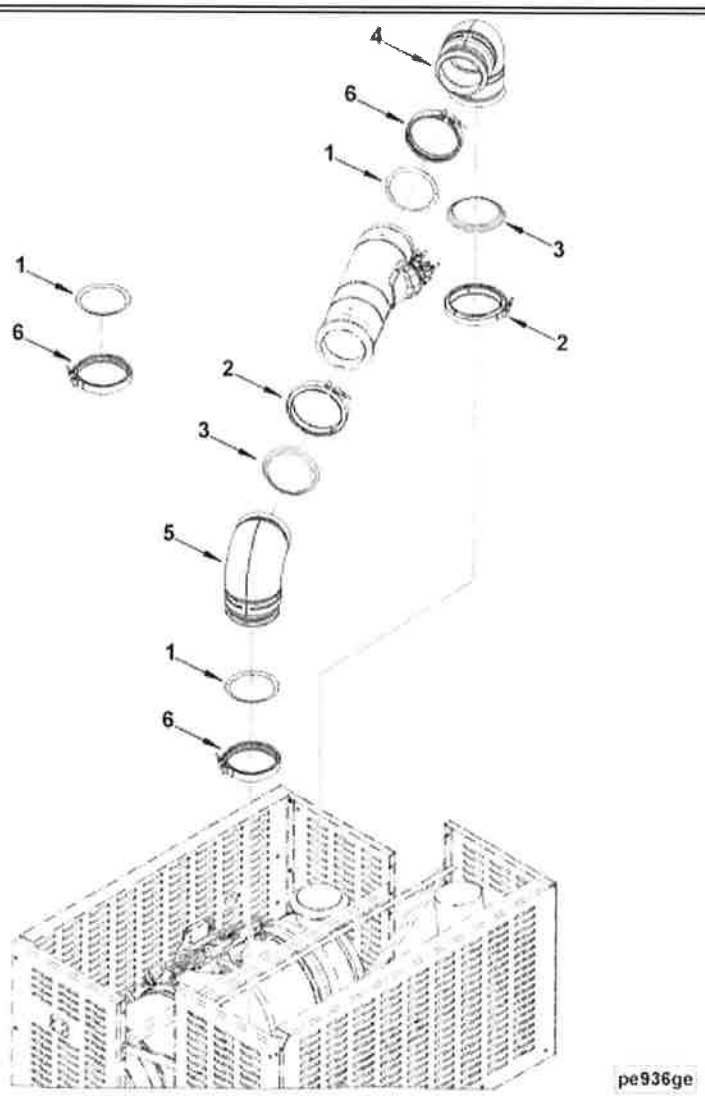

SMALL | MEDIUM | LARGE

Cart	Ref No	Part Number	Part Description	Required	Remarks
View My Cart	Emissions Catalog				
		PE85998	Exhaust Plumbing		Exhaust Plumbing...(More)
					Contains: Formed Tubes, V-
					Band Clamps and gaskets.

☐	1	2866337	Aftertreatment Device Gasket	3	
☐	2	2880213	V Band Clamp	2	
☐	3	2880215	Aftertreatment Device Gasket	2	
☐	4	2880461	Tube Connector Elbow	1	
☐	5	2880383	Tube Connector Elbow	1	
	6	2880483	V Band Clamp	3	Replace With 5290118

© 2020 Cummins Inc., Box 3005, Columbus, IN 47202-3005 U.S.A.
Terms of Use and Disclaimers | Recommended System Requirements
Need Assistance? Please click on the Contact Us button in the top right corner of any page.

User: 33705mhillegass | Contact Us

Parts Catalog - Option Detail

Electronic Parts Catalog - Option Detail				
Option	**Group**	**Graphic**	**Film Card**	**Date**
PE2050-01	11.01.1	pe200gp	II	12-OCT-11
Engines	ISM CM570, ISM CM570/870, ISM CM875, ISM CM876, ISM CM876 E, ISM11 CM876 M103, ISM11 CM876 SN, M11 CELECT, M11 CELECT PLUS, M11 MECHANICAL, QSM11 CM570, QSM11 CM876			

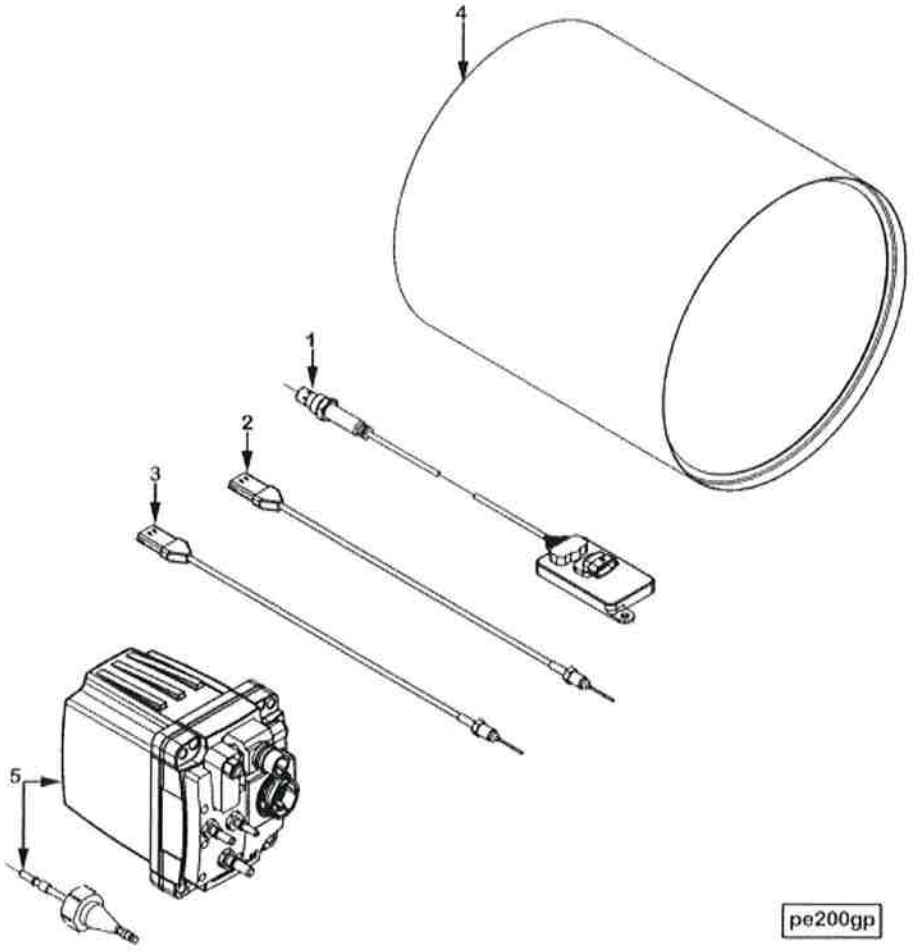

SMALL | MEDIUM | LARGE

Cart	Ref No	Part Number	Part Description	Required	Remarks
View My Cart	Emissions Catalog				
		PE2050-01	Aftertreatment Device		
					Aftertreatment Device
		4298551		1	
	1	2894939	Nitrogen Oxide Sensor	1	

☐					
☐	2	4902912	Temperature Sensor	1	Diesel Particulate Filter.
☐	3	4954574	Temperature Sensor	1	Diesel Particulate Filter.
☐	4	4999796	Catalyst Module	1	
☐	5	5283727	Fluid Doser	1	

© 2020 Cummins Inc., Box 3005, Columbus, IN 47202-3005 U.S.A.
Terms of Use and Disclaimers | Recommended System Requirements
Need Assistance? Please click on the Contact Us button in the top right corner of any page.

Regular Item 5, Exhibit 3

User: 33705mhillegass | Contact Us

Parts Catalog - Option Detail

Electronic Parts Catalog - Option Detail				
Option	**Group**	**Graphic**	**Film Card**	**Date**
WP9382	08.01	wp956gg	Z	26-NOV-07
Engines	6C8.3, C GAS PLUS CM556, G8.3, G8.3 CM558, GTA8.3 CM558, ISC CM2150, ISC CM554, ISC CM850, ISC8.3 CM2250, ISC8.3 G CM2180 C101, ISL CM2150, ISL CM554, ISL CM850, ISL G CM2180, ISL8.9 CM2150 L110, ISL8.9 CM2880 L112, ISL9 CM2150 SN, ISL9 CM2250, ISL9 CM2350 L101, ISL9 CM2350 L111, ISLE4 CM850, L GAS PLUS CM556, L8.9, L8.9 L121, L8.9G CMOH2.0 L125B, L9 CM2350 L116B, L9 CM2350 L119B, L9 CM2350 L120C, L9 CM2350 L123B, L9.3 L105, L9.5 L117, L9N CM2380 L124B, QSC8.3 CM2250, QSC8.3 CM2880 C102, QSC8.3 CM554, QSC8.3 CM850(CM2850), QSL9 CM2250, QSL9 CM2250 L115, QSL9 CM2350 L102, QSL9 CM2350 L107, QSL9 CM2350 L118, QSL9 CM2350 L122, QSL9 CM554, QSL9 CM850(CM2850), QSL9 G CM558, QSL9 M CM2250 L106, QSL9.3 CM2880 L113			

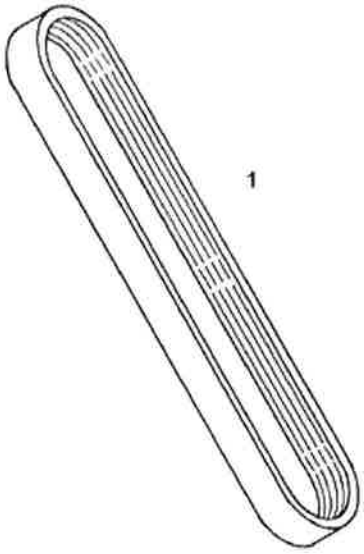

wp956gg

SMALL | MEDIUM | LARGE

Cart	Ref No	Part Number	Part Description	Required	Remarks

Regular Item 5, Exhibit 3

View My Cart

		WP9382	Water Pump Drive		MR - DRIVE, WATER PUMP...(More)
					Belt Length (mm): 2310
					Material: Orion
☐	1	3978280	V Ribbed Belt	1	

© 2020 Cummins Inc., Box 3005, Columbus, IN 47202-3005 U.S.A.
Terms of Use and Disclaimers | Recommended System Requirements
Need Assistance? Please click on the Contact Us button in the top right corner of any page.

					Customers With ISLG Should
					Order Kit 4352346NX
					And Reference TSB160094 For
					Details.
☐		4955484	Engineering Valve Kit	A/R	
☐		5258066	Exhaust Gas Recirculation Valve	1	
☐		4932615	Connection Gasket	2	
☐		4938761	Exhaust Gas Recirculation Valve Gasket	1	

© 2020 Cummins Inc., Box 3005, Columbus, IN 47202-3005 U.S.A.
Terms of Use and Disclaimers | Recommended System Requirements
Need Assistance? Please click on the Contact Us button in the top right corner of any page.

Regular Item 5, Exhibit 3

User: 33705mhillegass | Contact Us

Parts Catalog - Option Detail

Electronic Parts Catalog - Option Detail				
Option	**Group**	**Graphic**	**Film Card**	**Date**
ER9066-10	11.01.1	er907gw	Z	21-FEB-11
Engines	6C8.3, C GAS PLUS CM556, G8.3, G8.3 CM558, GTA8.3 CM558, ISC CM2150, ISC CM554, ISC CM850, ISC8.3 CM2250, ISC8.3 G CM2180 C101, ISL CM2150, ISL CM554, ISL CM850, ISL G CM2180, ISL8.9 CM2150 L110, ISL8.9 CM2880 L112, ISL9 CM2150 SN, ISL9 CM2250, ISL9 CM2350 L101, ISL9 CM2350 L111, ISLE4 CM850, L GAS PLUS CM556, L8.9, L8.9 L121, L8.9G CMOH2.0 L125B, L9 CM2350 L116B, L9 CM2350 L119B, L9 CM2350 L120C, L9 CM2350 L123B, L9.3 L105, L9.5 L117, L9N CM2380 L124B, QSC8.3 CM2250, QSC8.3 CM2880 C102, QSC8.3 CM554, QSC8.3 CM850(CM2850), QSL9 CM2250, QSL9 CM2250 L115, QSL9 CM2350 L102, QSL9 CM2350 L107, QSL9 CM2350 L118, QSL9 CM2350 L122, QSL9 CM554, QSL9 CM850(CM2850), QSL9 G CM558, QSL9 M CM2250 L106, QSL9.3 CM2880 L113			

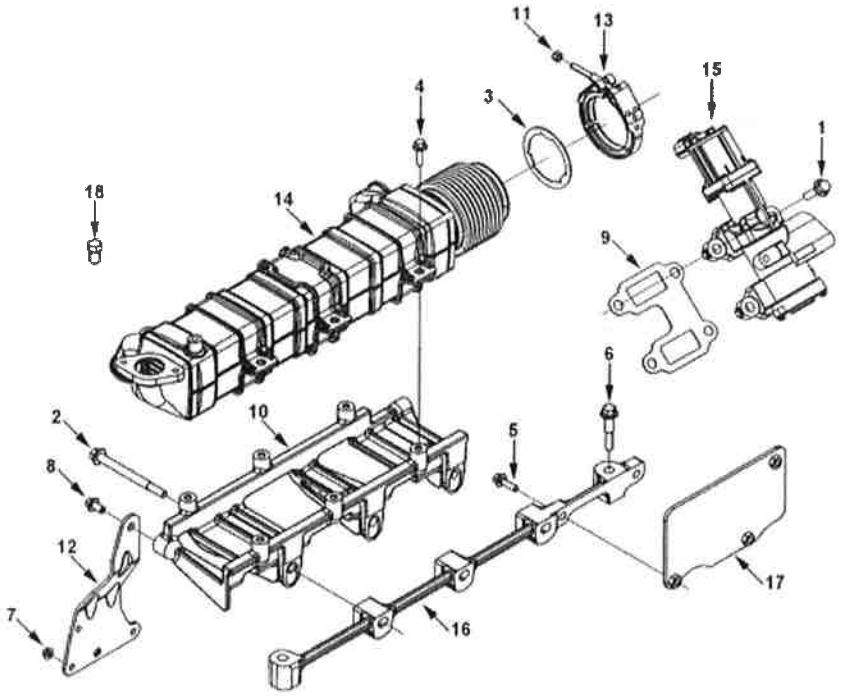

er907gw

SMALL | MEDIUM | LARGE

Cart	Ref No	Part Number	Part Description	Required	Remarks

Regular Item 5, Exhibit 3

View My Cart

		ER9066-10	Exhaust Recirculation		Exhaust Recirculation
☐	1	3089016	Hexagon Flange Head Cap Screw	4	M10 X 1.50 X 35.
☐	2	3093806	Hexagon Flange Head Cap Screw	3	M10 x 1.50 x 110
☐	3	3104230	Exhaust Gas Recirculation Valve Gasket	1	EGR Cooler Outlet
☐	4	3900630	Hexagon Flange Head Cap Screw	1	M8 X 1.25 X 20
☐	5	3900631	Hexagon Flange Head Cap Screw	6	M8 X 1.25 X 25.
☐	6	3900634	Hexagon Flange Head Cap Screw	1	M10 X 1.50 X 50.
☐	7	3906216	Hexagon Flange Nut	3	M6 X 1.00.
☐	8	3925883	Hexagon Flange Head Cap Screw	1	M8 X 1.25 X 16
☐	9	4938761	Exhaust Gas Recirculation Valve Gasket	1	
☐	10	4940674	Exhaust Gas Recirculation Module Support	1	
☐	11	4943908	Lock Nut	1	
☐	12	4945365	Exhaust Recirculation Cooler Bracket	1	
☐	13	4946823	V Band Clamp	1	
	14	4990739	Exhaust Gas Recirculation Cooler	1	TSB140008 And TSB160094.
☐	15	5258066	Exhaust Gas Recirculation Valve	1	
☐	16	5262738	Mounting Spacer	1	
☐	17	5267483	Heat Shield	1	
☐	18	5284000	Threaded Plug	1	
					See TSB140008 For EGR Cooler
					Replacement. OEM New Flyer
					Should Order Kit 4352444RX.
					All Other OEMS Should Order
					New Vertical Kit 4352253RX
					And The Upfit Kit 4352363 And
					The Appropriate Tubes.

Regular Item 5, Exhibit 3



Parts Catalog - Option Detail

Electronic Parts Catalog - Option Detail				
Option	**Group**	**Graphic**	**Film Card**	**Date**
SD9353-01	15.05	null	T	25-JAN-16
Engines	4B3.9, 6A3.4, 6B5.9, B GAS INTERNATIONAL CM556, B4.5, B4.5 CM2350 B129B, B4.5 CM2350 B146C, B4.5 CM2350 B147B, B4.5 RGT, B4.5S, B5.9 G, B5.9 GAS PLUS CM556, B5.9 LPG, B5.9 LPG PLUS CM556, B6.7 CM2350 B121B, B6.7 CM2350 B135B, B6.7 CM2350 B136C, B6.7 CM2350 B148B, B6.7 G CMOH6.0 B125, B6.7N CM2380 B150B, B6.7S, F3.8 CM2350 F120B, F3.8 CM2350 F128C, F3.8 CM2350 F132B, F3.8 F102, G3.9, G5.9, G5.9 CM558, ISB (CHRYSLER), ISB CM2150, ISB CM2150 E, ISB CM550, ISB CM850, ISB/ISD4.5 CM2150 B119, ISB/ISD4.5 CM2150 SN, ISB/ISD6.7 CM2150 B120, ISB/ISD6.7 CM2150 SN, ISB/ISD6.7 CM2880 B126, ISB3.9 CM2220 B107, ISB4.5 CM2150, ISB5.9G CM2180, ISB6.7 2010 DCX PICKUP, ISB6.7 2013 DCX CHASSIS CAB, ISB6.7 CM2150 SQ, ISB6.7 CM2250, ISB6.7 CM2350 B101, ISB6.7 CM2350 B103, ISB6.7 CM2350 B142, ISB6.7 CM2670 B153B, ISB6.7 G CM2180 B118, ISBE CM2150, ISBE CM800, ISBE2/ISBE3 CM850, ISBE4 CM850, ISD4.5 CM2150, ISD6.7 CM2880 D101, ISF2.8 CM2220, ISF2.8 CM2220 AN, ISF2.8 CM2220 EC, ISF2.8 CM2220 ECF2, ISF2.8 CM2220 F101, ISF2.8 CM2220 F117, ISF2.8 CM2220 F122, ISF2.8 CM2220 F126, ISF2.8 CM2220 F129, ISF2.8 CM2220 IAN, ISF3.8 CM2220, ISF3.8 CM2220 AN, ISF3.8 CM2220 F103, ISF3.8 CM2220 F110, ISF3.8 CM2220 F116, ISF3.8 CM2220 F134B, ISF3.8 CM2220 IAN, ISF3.8 CM2350 F109, ISF4.5 CM2220 F123, ISG11 CM2880 G106, ISG11 CM2880 G108, ISG12 CM2880 G107, ISG12 CM2880 G109, ISG12 G CMOH6.0 G111, QSB3.9 30 CM550, QSB3.9 CM2880 B138, QSB4.5 30 CM550, QSB4.5 CM2150 B108, QSB4.5 CM2250 B131, QSB4.5 CM2250 EC, QSB4.5 CM2350 B106, QSB4.5 CM2350 B122				

Cart	Ref No	Part Number	Part Description	Required	Remarks
View My Cart					
		SD9353-01	Coolant Level Switch		Coolant Level Switch...(More)
					Supplier: Cummins
					Supplied: In Kit.
					Float Type Fluid Level Switch
					Used For Bus Applications.
☐		4359193	Coolant Level Switch	2	

© 2020 Cummins Inc., Box 3005, Columbus, IN 47202-3005 U.S.A.
Terms of Use and Disclaimers | Recommended System Requirements
Need Assistance? Please click on the Contact Us button in the top right corner of any page.

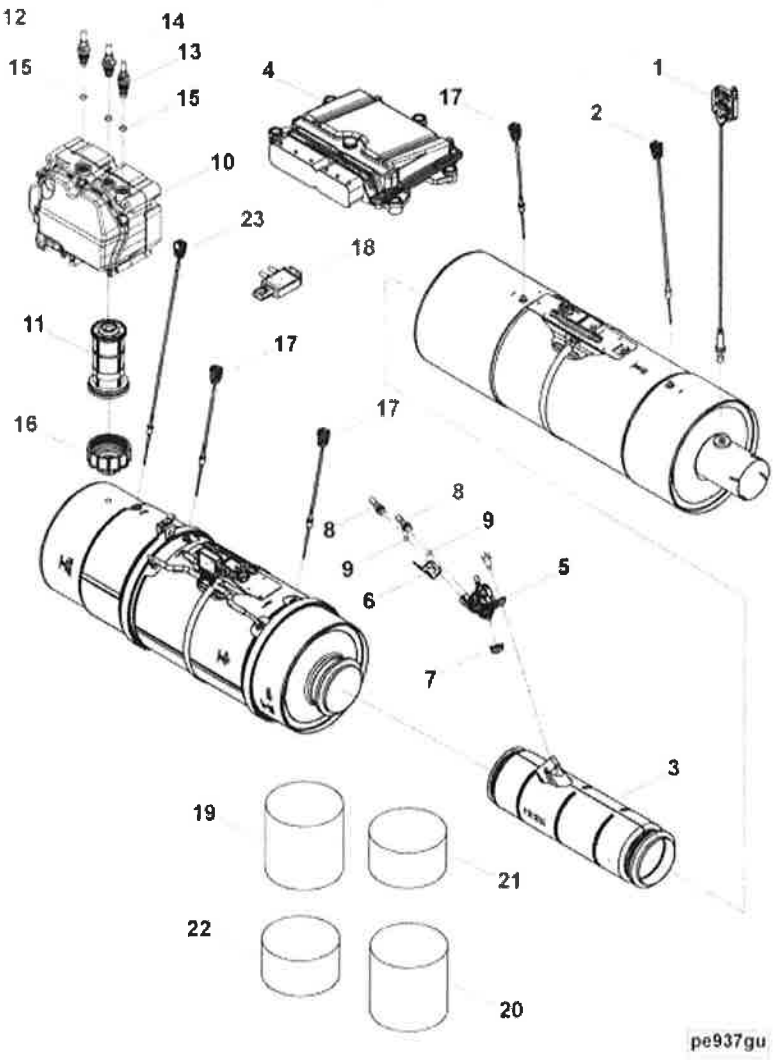

SMALL | MEDIUM | LARGE

Cart	Ref No	Part Number	Part Description	Required	Remarks
View My Cart / Emissions Catalog					
		PE9084-02	Aftertreatment Device		Aftertreatment Device... (More)
					Aftertreatment Device Type:
					SCR And DPF
☐	1	2871974	Nitrogen Oxide Sensor	1	12V Tailpipe Out.
☐	1	2871978	Nitrogen Oxide Sensor	1	CES P/N A029E786.
					12V Tailpipe Out.
☐	1	2872236	Nitrogen Oxide Sensor	1	CES P/N A029T775.
					12V Tailpipe Out.
☐	2	2872469	Temperature Sensor	1	CES P/N A030E108.
					Aftertreatment Inlet/Outlet.
☐	3	2885892	Decomposition Reactor	1	CES P/N A029Y984.





Parts Catalog - Option Detail

Electronic Parts Catalog - Option Detail				
Option	**Group**	**Graphic**	**Film Card**	**Date**
PE9084-02	11.01.1	pe937gu	T	11-AUG-10
Engines	4B3.9, 6A3.4, 6B5.9, B GAS INTERNATIONAL CM556, B4.5, B4.5 CM2350 B129B, B4.5 CM2350 B146C, B4.5 CM2350 B147B, B4.5 RGT, B4.5S, B5.9 G, B5.9 GAS PLUS CM556, B5.9 LPG, B5.9 LPG PLUS CM556, B6.7 CM2350 B121B, B6.7 CM2350 B135B, B6.7 CM2350 B136C, B6.7 CM2350 B148B, B6.7 G CMOH6.0 B125, B6.7N CM2380 B150B, B6.7S, F3.8 CM2350 B146C, F3.8 CM2350 F120B, F3.8 CM2350 F128C, F3.8 CM2350 F132B, F3.8 CM2350 F133C, F3.8 F102, G3.9, G5.9, G5.9 CM558, ISB (CHRYSLER), ISB CM2150, ISB CM2150 E, ISB CM550, ISB CM850, ISB/ISD4.5 CM2150 B119, ISB/ISD4.5 CM2150 SN, ISB/ISD6.7 CM2150 B120, ISB/ISD6.7 CM2150 SN, ISB/ISD6.7 CM2880 B126, ISB3.9 CM2220 B107, ISB4.5 CM2150, ISB5.9G CM2180, ISB6.7 2010 DCX PICKUP, ISB6.7 2013 DCX CHASSIS CAB, ISB6.7 CM2150 SQ, ISB6.7 CM2250, ISB6.7 CM2350 B101, ISB6.7 CM2350 B103, ISB6.7 CM2350 B142, ISB6.7 CM2670 B153B, ISB6.7 G CM2180 B118, ISBE CM2150, ISBE CM800, ISBE2/ISBE3 CM850, ISBE4 CM850, ISD4.5 CM2150, ISD6.7 CM2880 D101, ISF2.8 CM2220, ISF2.8 CM2220 AN, ISF2.8 CM2220 EC, ISF2.8 CM2220 ECF2, ISF2.8 CM2220 F101, ISF2.8 CM2220 F117, ISF2.8 CM2220 F122, ISF2.8 CM2220 F126, ISF2.8 CM2220 F129, ISF2.8 CM2220 IAN, ISF3.8 CM2220, ISF3.8 CM2220 AN, ISF3.8 CM2220 F103, ISF3.8 CM2220 F110, ISF3.8 CM2220 F116, ISF3.8 CM2220 F134B, ISF3.8 CM2220 IAN, ISF3.8 CM2350 F109, ISF4.5 CM2220 F123, ISG11 CM2880 G106, ISG11 CM2880 G108, ISG12 CM2880 G107, ISG12 CM2880 G109, ISG12 G CMOH6.0 G111, QSB3.9 30 CM550, QSB3.9 CM2880 B138, QSB4.5 30 CM550, QSB4.5 CM2150 B108, QSB4.5 CM2250 B131, QSB4.5 CM2250 EC			

					Only one Decomp Reactor Will
					be Installed in PE
					Option-Straight Inlet,
					Straight Outlet..
☐	3	2885907	Decomposition Reactor	1	CES P/N A029Z083.
					Only one Decomp Reactor Will
					be Installed in PE
					Option-Spherical Inlet,
					Spherical Outlet.
☐	3	2885893	Decomposition Reactor	1	CES P/N A029Y985.
					Only one Decomp Reactor Will
					be Installed in PE
					Option-Straight Inlet,
					Spherical Outlet.
☐	3	2885895	Decomposition Reactor	1	CES P/N A029Y987.
					Only one Decomp Reactor Will
					be Installed in PE
					Option-Spherical Inlet,
					Straight Outlet.
☐	3	2885894	Decomposition Reactor	1	CES P/N A029Y986.
					Only one Decomp Reactor Will
					be Installed in PE
					Option-Integrated Spherical
					Inlet.
☐	4	2888243	Electronic Control Module	1	CES P/N A030W570.
☐	5	2888173	Doser Injector	1	CES P/N A030P707.
					To Be Used For Chrysler Only.
☐	6	2880303	Heat Shield	1	CES P/N A029K707.
☐	7	2885890	Aftertreatment Device Gasket	1	CES P/N A029Y977.
☐	8	2880305	Male Connector	2	CES P/N A029K710.

Regular Item 5, Exhibit 3

	9	2880306	O-Ring Seal	2	CES P/N A029K712.
	10	2871879	Doser Pump	1	CES P/N A028Y792.
	11	2880298	Filter Screen	1	CES P/N A029K698.
	12	2880299	Male Connector	1	CES P/N A029K701.
	13	2880300	Male Connector	1	CES P/N A029K702.
	14	2880301	Male Connector	1	CES P/N A029K703.
	15	2880302	O-Ring Seal	3	CES P/N A029K704.
	16	2880396	Filler Cap	1	CES P/N A029M481.
	17	2872468	Temperature Sensor	3	CES P/N A030E107.
					Aftertreament Inlet/Outlet.
	18	2871960	Differential Pressure Sensor	1	CES P/N Q229822.
					Diesel Particulate Filter.
	19	2866313	Catalyst Element	2	CES P/N Q165684.
	20	4969973	Catalyst Element	1	CES P/N Q165625.
	21	4969978	Catalyst Element	1	CES P/N Q165622.
	22	4990900	Particulate Filter Element	1	CES P/N Q165618.
	23	2872467	Temperature Sensor	1	CES P/N A030E106.
					Exhaust Gas.
		4376837	Kit, Hardware	A/R	CES P/N A050A001.
	7	4354280	Gasket, Aftermarket Device	1	CES P/N A049S642.
		2885889	Thermal Isolator	1	CES P/N A029V666.
		4394445	Screw, Hexagon Flange Head Cap	3	CES P/N A054T560.

© 2020 Cummins Inc., Box 3005, Columbus, IN 47202-3005 U.S.A.
Terms of Use and Disclaimers | Recommended System Requirements
Need Assistance? Please click on the Contact Us button in the top right corner of any page.

Regular Item 5, Exhibit 3

Parts Catalog - Option Detail

Electronic Parts Catalog - Option Detail				
Option	**Group**	**Graphic**	**Film Card**	**Date**
HD9294	12.04	hd954ge	T	03-JAN-09
Engines	4B3.9, 6A3.4, 6B5.9, B GAS INTERNATIONAL CM556, B4.5, B4.5 CM2350 B129B, B4.5 CM2350 B146C, B4.5 CM2350 B147B, B4.5 RGT, B4.5S, B5.9 G, B5.9 GAS PLUS CM556, B5.9 LPG, B5.9 LPG PLUS CM556, B6.7 CM2350 B121B, B6.7 CM2350 B135B, B6.7 CM2350 B136C, B6.7 CM2350 B148B, B6.7 G CMOH6.0 B125, B6.7N CM2380 B150B, B6.7S, F3.8 CM2350 F120B, F3.8 CM2350 F128C, F3.8 CM2350 F132B, F3.8 F102, G3.9, G5.9, G5.9 CM558, ISB (CHRYSLER), ISB CM2150, ISB CM2150 E, ISB CM550, ISB CM850, ISB/ISD4.5 CM2150 B119, ISB/ISD4.5 CM2150 SN, ISB/ISD6.7 CM2150 B120, ISB/ISD6.7 CM2150 SN, ISB/ISD6.7 CM2880 B126, ISB3.9 CM2220 B107, ISB4.5 CM2150, ISB5.9G CM2180, ISB6.7 2010 DCX PICKUP, ISB6.7 2013 DCX CHASSIS CAB, ISB6.7 CM2150 SQ, ISB6.7 CM2250, ISB6.7 CM2350 B101, ISB6.7 CM2350 B103, ISB6.7 CM2350 B142, ISB6.7 CM2670 B153B, ISB6.7 G CM2180 B118, ISBE CM2150, ISBE CM800, ISBE2/ISBE3 CM850, ISBE4 CM850, ISD4.5 CM2150, ISD6.7 CM2880 D101, ISF2.8 CM2220, ISF2.8 CM2220 AN, ISF2.8 CM2220 EC, ISF2.8 CM2220 ECF2, ISF2.8 CM2220 F101, ISF2.8 CM2220 F117, ISF2.8 CM2220 F122, ISF2.8 CM2220 F126, ISF2.8 CM2220 F129, ISF2.8 CM2220 IAN, ISF3.8 CM2220, ISF3.8 CM2220 AN, ISF3.8 CM2220 F103, ISF3.8 CM2220 F110, ISF3.8 CM2220 F116, ISF3.8 CM2220 F134B, ISF3.8 CM2220 IAN, ISF3.8 CM2350 F109, ISF4.5 CM2220 F123, ISG11 CM2880 G106, ISG11 CM2880 G108, ISG12 CM2880 G107, ISG12 CM2880 G109, ISG12 G CMOH6.0 G111, QSB3.9 30 CM550, QSB3.9 CM2880 B138, QSB4.5 30 CM550, QSB4.5 CM2150 B108, QSB4.5 CM2250 B131, QSB4.5 CM2250 EC, QSB4.5 CM2350 B106, QSB4.5 CM2350 B122				

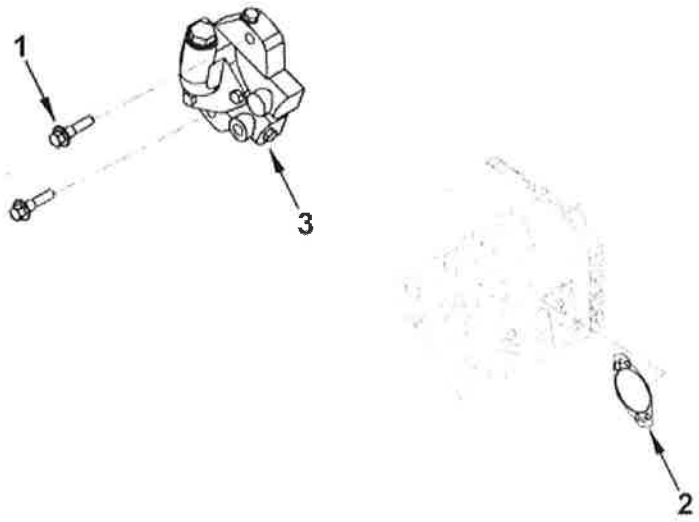

hd954ge

SMALL | MEDIUM | LARGE

Cart	Ref No	Part Number	Part Description	Required	Remarks
View My Cart					

Regular Item 5, Exhibit 3

		HD9294	Auxiliary Pump		Auxiliary Pump
☐	1	3093940	Hexagon Flange Head Cap Screw	2	M12 X 1.75 X 45
☐	2	4896897	Accessory Drive Cover Gasket	1	
	3	4994238	Hydraulic Pump	1	

© 2020 Cummins Inc., Box 3005, Columbus, IN 47202-3005 U.S.A.
Terms of Use and Disclaimers | Recommended System Requirements
Need Assistance? Please click on the Contact Us button in the top right corner of any page.





Parts Catalog - Option Detail

Electronic Parts Catalog - Option Detail				
Option	**Group**	**Graphic**	**Film Card**	**Date**
ER9457-05	11.01.1	er915gu	T	03-FEB-17
Engines	4B3.9, 6A3.4, 6B5.9, B GAS INTERNATIONAL CM556, B4.5, B4.5 CM2350 B129B, B4.5 CM2350 B146C, B4.5 CM2350 B147B, B4.5 RGT, B4.5S, B5.9 G, B5.9 GAS PLUS CM556, B5.9 LPG, B5.9 LPG PLUS CM556, B6.7 CM2350 B121B, B6.7 CM2350 B135B, B6.7 CM2350 B136C, B6.7 CM2350 B148B, B6.7 G CMOH6.0 B125, B6.7N CM2380 B150B, B6.7S, F3.8 CM2350 F120B, F3.8 CM2350 F128C, F3.8 CM2350 F132B, F3.8 F102, G3.9, G5.9, G5.9 CM558, ISB (CHRYSLER), ISB CM2150, ISB CM2150 E, ISB CM550, ISB CM850, ISB/ISD4.5 CM2150 B119, ISB/ISD4.5 CM2150 SN, ISB/ISD6.7 CM2150 B120, ISB/ISD6.7 CM2150 SN, ISB/ISD6.7 CM2880 B126, ISB3.9 CM2220 B107, ISB4.5 CM2150, ISB5.9G CM2180, ISB6.7 2010 DCX PICKUP, ISB6.7 2013 DCX CHASSIS CAB, ISB6.7 CM2150 SQ, ISB6.7 CM2250, ISB6.7 CM2350 B101, ISB6.7 CM2350 B103, ISB6.7 CM2350 B142, ISB6.7 CM2670 B153B, ISB6.7 G CM2180 B118, ISBE CM2150, ISBE CM800, ISBE2/ISBE3 CM850, ISBE4 CM850, ISD4.5 CM2150, ISD6.7 CM2880 D101, ISF2.8 CM2220, ISF2.8 CM2220 AN, ISF2.8 CM2220 EC, ISF2.8 CM2220 ECF2, ISF2.8 CM2220 F101, ISF2.8 CM2220 F117, ISF2.8 CM2220 F122, ISF2.8 CM2220 F126, ISF2.8 CM2220 F129, ISF2.8 CM2220 IAN, ISF3.8 CM2220, ISF3.8 CM2220 AN, ISF3.8 CM2220 F103, ISF3.8 CM2220 F110, ISF3.8 CM2220 F116, ISF3.8 CM2220 F134B, ISF3.8 CM2220 IAN, ISF3.8 CM2350 F109, ISF4.5 CM2220 F123, ISG11 CM2880 G106, ISG11 CM2880 G108, ISG12 CM2880 G107, ISG12 CM2880 G109, ISG12 G CMOH6.0 G111, QSB3.9 30 CM550, QSB3.9 CM2880 B138, QSB4.5 30 CM550, QSB4.5 CM2150 B108, QSB4.5 CM2250 B131, QSB4.5 CM2250 EC, QSB4.5 CM2350 B106, QSB4.5 CM2350 B122			

Regular Item 5, Exhibit 3

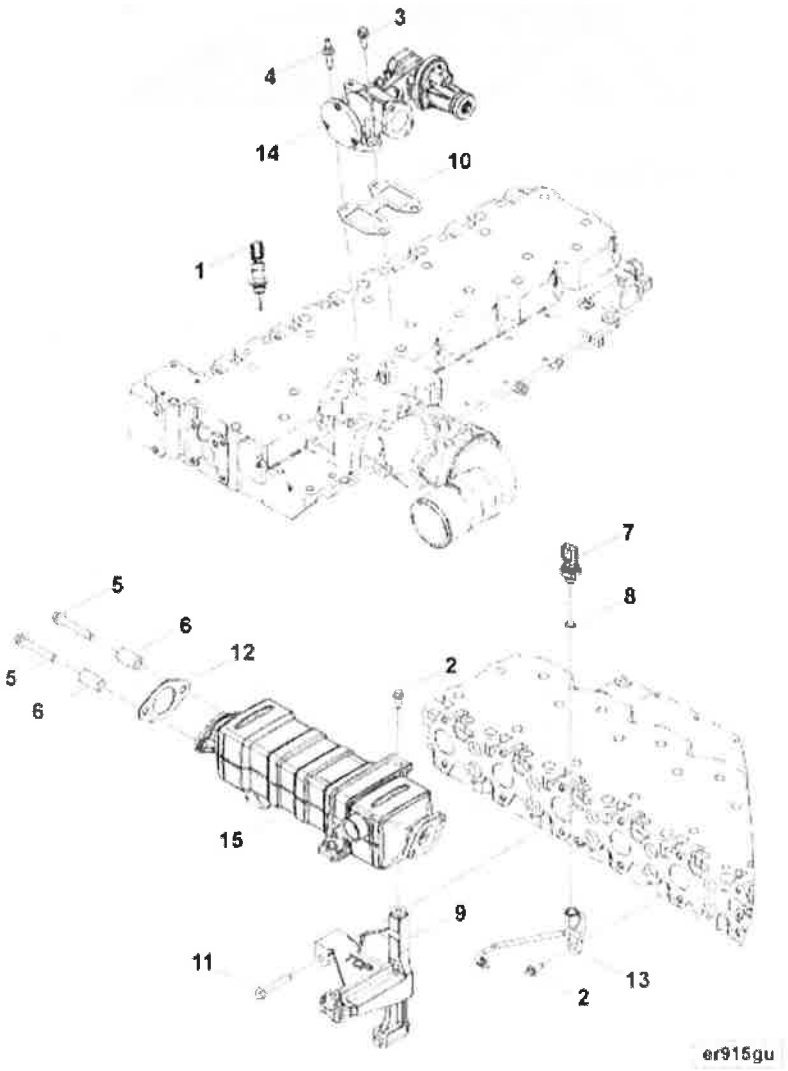

SMALL | MEDIUM | LARGE

Cart	Ref No	Part Number	Part Description	Required	Remarks
View My Cart					
		ER9457-05			Exhaust Recirculation
☐	1	2872858	Temperature Sensor	1	Exhaust Gas Temperature.
☐	2	3900630	Hexagon Flange Head Cap Screw	3	M8 X 1.25 X 20.
☐	3	3900631	Hexagon Flange Head Cap Screw	2	M8 X 1.25 X 25.
☐	4	3943995	Studded Flange Cap Screw	2	M8 X 1.25 X 30.
☐	5	3944593	Hexagon Flange Head Cap Screw	2	M10 X 1.50 X 65.
☐	6	3945252	Mounting Spacer	2	
☐	7	4928594	Pressure Sensor	1	Exhaust Gas.
☐	8	4010519	O-Ring Seal	1	
☐	9	4993632	Exhaust Gas Recirculation Module	1	

			Support		
☐	10	5253019	Exhaust Gas Recirculation Valve Gasket	1	
☐	11	5255716	Captive Washer Cap Screw	3	
☐	12	5402022	Exhaust Manifold Gasket	1	
	13	5317906	Pressure Sensing Tube	1	
	14	5397382	Exhaust Gas Recirculation Valve	1	
	15	5341879	Exhaust Gas Recirculation Cooler	1	
☐		5405857	Kit, Exh Rcn Valve	A/R	
☐	10	5253019	Exhaust Gas Recirculation Valve Gasket	1	
	14	5397382	Exhaust Gas Recirculation Valve	1	
☐		4932615	Connection Gasket	1	EGR Valve Intake Gasket.
☐		5405854	Kit, Exh Rcn Cooler	A/R	
☐	12	5402022	Exhaust Manifold Gasket	1	
	15	5341879	Exhaust Gas Recirculation Cooler	1	
☐		3058653	O-Ring Seal	3	
☐		3910517	O-Ring Seal	1	
☐		4932615	Connection Gasket	1	EGR Valve Intake Gasket.
☐		4934278	Sealing Washer	4	

© 2020 Cummins Inc., Box 3005, Columbus, IN 47202-3005 U.S.A.
Terms of Use and Disclaimers | Recommended System Requirements
Need Assistance? Please click on the Contact Us button in the top right corner of any page.

Regular Item 5, Exhibit 3





Parts Catalog - Option Detail

Electronic Parts Catalog - Option Detail				
Option	**Group**	**Graphic**	**Film Card**	**Date**
TP97398-02	10.06.2	tp960gv	T	22-FEB-07
Engines	4B3.9, 6A3.4, 6B5.9, B GAS INTERNATIONAL CM556, B4.5, B4.5 CM2350 B129B, B4.5 CM2350 B146C, B4.5 CM2350 B147B, B4.5 RGT, B4.5S, B5.9 G, B5.9 GAS PLUS CM556, B5.9 LPG, B5.9 LPG PLUS CM556, B6.7 CM2350 B121B, B6.7 CM2350 B135B, B6.7 CM2350 B136C, B6.7 CM2350 B148B, B6.7 G CMOH6.0 B125, B6.7N CM2380 B150B, B6.7S, F3.8 CM2350 F120B, F3.8 CM2350 F128C, F3.8 CM2350 F132B, F3.8 F102, G3.9, G5.9, G5.9 CM558, ISB (CHRYSLER), ISB CM2150, ISB CM2150 E, ISB CM550, ISB CM850, ISB/ISD4.5 CM2150 B119, ISB/ISD4.5 CM2150 SN, ISB/ISD6.7 CM2150 B120, ISB/ISD6.7 CM2150 SN, ISB/ISD6.7 CM2880 B126, ISB3.9 CM2220 B107, ISB4.5 CM2150, ISB5.9G CM2180, ISB6.7 2010 DCX PICKUP, ISB6.7 2013 DCX CHASSIS CAB, ISB6.7 CM2150 SQ, ISB6.7 CM2250, ISB6.7 CM2350 B101, ISB6.7 CM2350 B103, ISB6.7 CM2350 B142, ISB6.7 CM2670 B153B, ISB6.7 G CM2180 B118, ISBE CM2150, ISBE CM800, ISBE2/ISBE3 CM850, ISBE4 CM850, ISD4.5 CM2150, ISD6.7 CM2880 D101, ISF2.8 CM2220, ISF2.8 CM2220 AN, ISF2.8 CM2220 EC, ISF2.8 CM2220 ECF2, ISF2.8 CM2220 F101, ISF2.8 CM2220 F117, ISF2.8 CM2220 F122, ISF2.8 CM2220 F126, ISF2.8 CM2220 F129, ISF2.8 CM2220 IAN, ISF3.8 CM2220, ISF3.8 CM2220 AN, ISF3.8 CM2220 F103, ISF3.8 CM2220 F110, ISF3.8 CM2220 F116, ISF3.8 CM2220 F134B, ISF3.8 CM2220 IAN, ISF3.8 CM2350 F109, ISF4.5 CM2220 F123, ISG11 CM2880 G106, ISG11 CM2880 G108, ISG12 CM2880 G107, ISG12 CM2880 G109, ISG12 G CMOH6.0 G111, QSB3.9 30 CM550, QSB3.9 CM2880 B138, QSB4.5 30 CM550, QSB4.5 CM2150 B108, QSB4.5 CM2250 B131, QSB4.5 CM2250 EC, QSB4.5 CM2350 B106, QSB4.5 CM2350 B122			

Regular Item 5, Exhibit 3

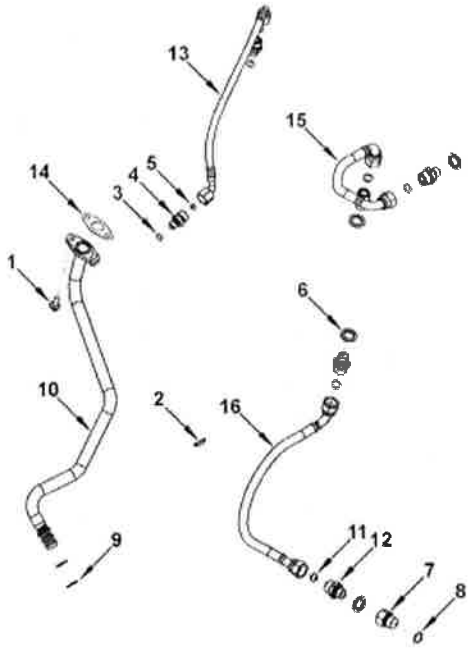

tp960gv

SMALL | MEDIUM | LARGE

Cart	Ref No	Part Number	Part Description	Required	Remarks
View My Cart					
		TP97398-02	Turbocharger Plumbing		Turbocharger Plumbing
☐	1	3900630	Hexagon Flange Head Cap Screw	2	M8 X 1.25 X 20
☐	2	3920706	Expansion Plug	1	
☐		3922789	Male Connector	2	
☐	3	3678603	O-Ring Seal	1	
	4	3922790	Male Connector	1	M12 X 1.50 X 11/16-16
☐	5	3922794	O-Ring Seal	1	
☐	6	4944257	Sealing Washer	4	
☐		4929435	Female Connector	1	
	7	4929436	Female Connector	1	

☐	8	3678786	O-Ring Seal	1	M18
☐		4936158	Turbocharger Oil Drain Connection	1	
☐	9	3928624	O-Ring Seal	2	
	10	4936157	Turbocharger Oil Drain Connection	1	
☐		4937477	Male Union	4	
☐	11	3627695	O-Ring Seal	1	
	12	4937476	Male Union	1	
☐	13	4937736	Flexible Hose	1	
	14	4931365	Oil Drain Gasket	1	Replace With 5264568
☐	15	4937702	Flexible Hose	1	
☐	16	4937757	Flexible Hose	1	

© 2020 Cummins Inc., Box 3005, Columbus, IN 47202-3005 U.S.A.
Terms of Use and Disclaimers | Recommended System Requirements
Need Assistance? Please click on the Contact Us button in the top right corner of any page.

Regular Item 5, Exhibit 3



Parts Catalog - Option Detail

Electronic Parts Catalog - Option Detail				
Option	**Group**	**Graphic**	**Film Card**	**Date**
PE9236	11.01.1	null	T	07-JUL-16
Engines	4B3.9, 6A3.4, 6B5.9, B GAS INTERNATIONAL CM556, B4.5, B4.5 CM2350 B129B, B4.5 CM2350 B146C, B4.5 CM2350 B147B, B4.5 RGT, B4.5S, B5.9 G, B5.9 GAS PLUS CM556, B5.9 LPG, B5.9 LPG PLUS CM556, B6.7 CM2350 B121B, B6.7 CM2350 B135B, B6.7 CM2350 B136C, B6.7 CM2350 B148B, B6.7 G CMOH6.0 B125, B6.7N CM2380 B150B, B6.7S, F3.8 CM2350 F120B, F3.8 CM2350 F128C, F3.8 CM2350 F132B, F3.8 F102, G3.9, G5.9, G5.9 CM558, ISB (CHRYSLER), ISB CM2150, ISB CM2150 E, ISB CM550, ISB CM850, ISB/ISD4.5 CM2150 B119, ISB/ISD4.5 CM2150 SN, ISB/ISD6.7 CM2150 B120, ISB/ISD6.7 CM2150 SN, ISB/ISD6.7 CM2880 B126, ISB3.9 CM2220 B107, ISB4.5 CM2150, ISB5.9G CM2180, ISB6.7 2010 DCX PICKUP, ISB6.7 2013 DCX CHASSIS CAB, ISB6.7 CM2150 SQ, ISB6.7 CM2250, ISB6.7 CM2350 B101, ISB6.7 CM2350 B103, ISB6.7 CM2350 B142, ISB6.7 CM2670 B153B, ISB6.7 G CM2180 B118, ISBE CM2150, ISBE CM800, ISBE2/ISBE3 CM850, ISBE4 CM850, ISD4.5 CM2150, ISD6.7 CM2880 D101, ISF2.8 CM2220, ISF2.8 CM2220 AN, ISF2.8 CM2220 EC, ISF2.8 CM2220 ECF2, ISF2.8 CM2220 F101, ISF2.8 CM2220 F117, ISF2.8 CM2220 F122, ISF2.8 CM2220 F126, ISF2.8 CM2220 F129, ISF2.8 CM2220 IAN, ISF3.8 CM2220, ISF3.8 CM2220 AN, ISF3.8 CM2220 F103, ISF3.8 CM2220 F110, ISF3.8 CM2220 F116, ISF3.8 CM2220 F134B, ISF3.8 CM2220 IAN, ISF3.8 CM2350 F109, ISF4.5 CM2220 F123, ISG11 CM2880 G106, ISG11 CM2880 G108, ISG12 CM2880 G107, ISG12 CM2880 G109, ISG12 G CMOH6.0 G111, QSB3.9 30 CM550, QSB3.9 CM2880 B138, QSB4.5 30 CM550, QSB4.5 CM2150 B108, QSB4.5 CM2250 B131, QSB4.5 CM2250 EC, QSB4.5 CM2350 B106, QSB4.5 CM2350 B122				

Cart	Ref No	Part Number	Part Description	Required	Remarks
View My Cart	Emissions Catalog				
		PE9236	Aftertreatment Device		Aftertreatment Device...(More)
					Certification
☐		2871878	Doser Injector	1	
☐		2880303	Heat Shield	1	
☐		2880304	Aftertreatment Device Gasket	1	
☐		2880305	Male Connector	1	
☐		2880306	O-Ring Seal	1	
☐		2880395	Female Connector	1	
☐		2880306	O-Ring Seal	1	
☐		2871879	Doser Pump	1	
☐		2880299	Male Connector	1	
☐		2880302	O-Ring Seal	1	
☐		2880392	Female Connector	1	

☐		2880300	Male Connector	1	
☐		2880302	O-Ring Seal	1	
☐		2880393	Female Connector	1	
☐		2880396	Filler Cap	1	
☐		2888180	Male Connector	1	
☐		2894939	Nitrogen Oxide Sensor	1	
☐		4902912	Temperature Sensor	1	Diesel particulate filter
☐		5266516	Catalyst Module	1	

© 2020 Cummins Inc., Box 3005, Columbus, IN 47202-3005 U.S.A.
Terms of Use and Disclaimers | Recommended System Requirements
Need Assistance? Please click on the Contact Us button in the top right corner of any page.

Regular Item 5, Exhibit 3

User: 33705mhillegass | Contact Us

Parts Catalog - Option Detail

Electronic Parts Catalog - Option Detail				
Option	**Group**	**Graphic**	**Film Card**	**Date**
ER9322	11.01.1	er913gw	Z	18-NOV-13
Engines	6C8.3, C GAS PLUS CM556, G8.3, G8.3 CM558, GTA8.3 CM558, ISC CM2150, ISC CM554, ISC CM850, ISC8.3 CM2250, ISC8.3 G CM2180 C101, ISL CM2150, ISL CM554, ISL CM850, ISL G CM2180, ISL8.9 CM2150 L110, ISL8.9 CM2880 L112, ISL9 CM2150 SN, ISL9 CM2250, ISL9 CM2350 L101, ISL9 CM2350 L111, ISLE4 CM850, L GAS PLUS CM556, L8.9, L8.9 L121, L8.9G CMOH2.0 L125B, L9 CM2350 L116B, L9 CM2350 L119B, L9 CM2350 L120C, L9 CM2350 L123B, L9 CM2670 L128B, L9.3 L105, L9.5 L117, L9N CM2380 L124B, QSC8.3 CM2250, QSC8.3 CM2880 C102, QSC8.3 CM554, QSC8.3 CM850(CM2850), QSL9 CM2250, QSL9 CM2250 L115, QSL9 CM2350 L102, QSL9 CM2350 L107, QSL9 CM2350 L118, QSL9 CM2350 L122, QSL9 CM554, QSL9 CM850(CM2850), QSL9 G CM558, QSL9 M CM2250 L106, QSL9.3 CM2880 L113			

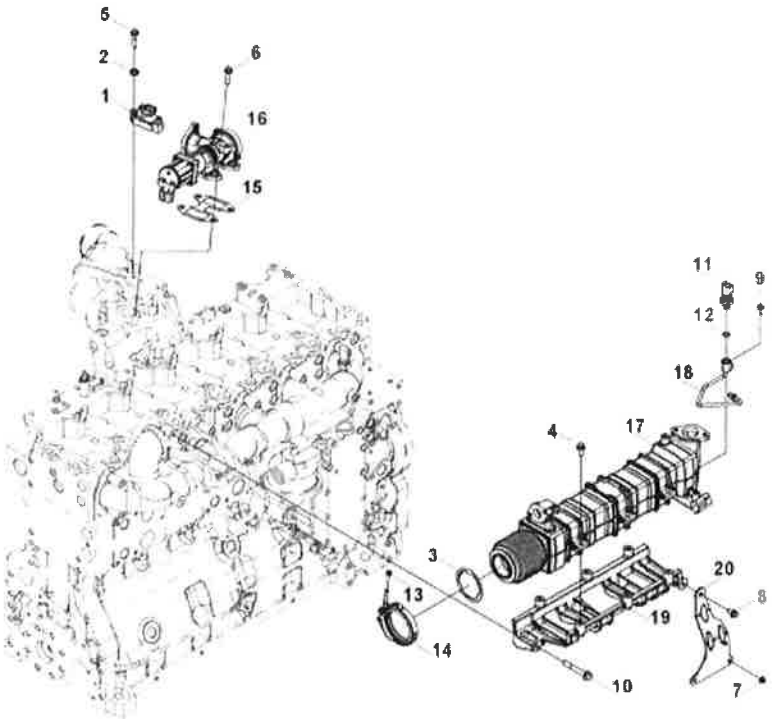

er913gw

SMALL | MEDIUM | LARGE

Cart	Ref No	Part Number	Part Description	Required	Remarks

View My Cart

		ER9322	Exhaust Recirculation		Exhaust Recirculation... (More)
					Engine Cylinders: 6
					Engine Family: L Series
					Cooler Location: Exhaust
					Side
					Valve Location: Air Intake
					Connection Fuel Pump Side
					Unique Characterisics:
					Angles the EGR Valve 10
					Degrees Inward from Crank
					Centerline
☐	1	2872424	Differential Pressure Sensor	1	EGR DP Sensor
☐	2	4076823	Rectangular Ring Seal	2	
☐	3	3104230	Exhaust Gas Recirculation Valve Gasket	1	EGR Cooler Outlet
☐	4	3900630	Hexagon Flange Head Cap Screw	6	M8 X 1.25 X 20
☐	5	3900632	Hexagon Flange Head Cap Screw	2	M8 X 1.25 X 35.
☐	6	3902114	Hexagon Flange Head Cap Screw	4	M8 X 1.25 X 30.
☐	7	3906216	Hexagon Flange Nut	3	M6 X 1.00.
☐	8	3925883	Hexagon Flange Head Cap Screw	1	M8 X 1.25 X 16
☐	9	3936683	Hexagon Flange Head Cap Screw	1	M6 X 1.00 X 16.
☐	10	3943933	Hexagon Flange Head Cap Screw	3	M10 x 1.50 x 68
☐	11	4928594	Pressure Sensor	1	Exhaust Gas
☐	12	4010519	O-Ring Seal	1	
☐	13	4943908	Lock Nut	1	
☐	14	4946823	V Band Clamp	1	
☐	15	5253019	Exhaust Gas Recirculation Valve Gasket	1	
☐	16	5271583	Exhaust Gas Recirculation Valve	1	Serviced As 4309416.
	17	5297551	Exhaust Gas Recirculation Cooler	1	

Regular Item 5, Exhibit 3

☐	18	5297792	Pressure Sensing Tube	1	
☐	19	5297796	Exhaust Gas Recirculation Module Support	1	
☐	20	5306383	Exhaust Recirculation Cooler Bracket	1	
☐		4309416	Engineering Valve Kit	A/R	Recon Equivalent 4309416 NX
☐		5253019	Exhaust Gas Recirculation Valve Gasket	1	
☐		5271583	Exhaust Gas Recirculation Valve	1	Serviced As 4309416.
☐		4932615	Connection Gasket	2	EGR Valve Intake
☐		4352253	Exhaust Recirculation Cooler Kit	A/R	Recon Equiv. 4352253 NX/RX
☐		3104230	Exhaust Gas Recirculation Valve Gasket	1	EGR Cooler Outlet
		5297551	Exhaust Gas Recirculation Cooler	1	
☐		4932615	Connection Gasket	2	EGR Valve Intake
☐		5297806	Diamond Ring Seal	2	Item not Shown in Art

© 2020 Cummins Inc., Box 3005, Columbus, IN 47202-3005 U.S.A.
Terms of Use and Disclaimers | Recommended System Requirements
Need Assistance? Please click on the Contact Us button in the top right corner of any page.

Regular Item 5, Exhibit 3

Parts Catalog - Option Detail

Electronic Parts Catalog - Option Detail				
Option	**Group**	**Graphic**	**Film Card**	**Date**
PE9550	11.01.1	null	T	21-JAN-16
Engines	4B3.9, 6A3.4, 6B5.9, B GAS INTERNATIONAL CM556, B4.5, B4.5 CM2350 B129B, B4.5 CM2350 B146C, B4.5 CM2350 B147B, B4.5 RGT, B4.5S, B5.9 G, B5.9 GAS PLUS CM556, B5.9 LPG, B5.9 LPG PLUS CM556, B6.7 CM2350 B121B, B6.7 CM2350 B135B, B6.7 CM2350 B136C, B6.7 CM2350 B148B, B6.7 G CMOH6.0 B125, B6.7N CM2380 B150B, B6.7S, F3.8 CM2350 F120B, F3.8 CM2350 F128C, F3.8 CM2350 F132B, F3.8 F102, G3.9, G5.9, G5.9 CM558, ISB (CHRYSLER), ISB CM2150, ISB CM2150 E, ISB CM550, ISB CM850, ISB/ISD4.5 CM2150 B119, ISB/ISD4.5 CM2150 SN, ISB/ISD6.7 CM2150 B120, ISB/ISD6.7 CM2150 SN, ISB/ISD6.7 CM2880 B126, ISB3.9 CM2220 B107, ISB4.5 CM2150, ISB5.9G CM2180, ISB6.7 2010 DCX PICKUP, ISB6.7 2013 DCX CHASSIS CAB, ISB6.7 CM2150 SQ, ISB6.7 CM2250, ISB6.7 CM2350 B101, ISB6.7 CM2350 B103, ISB6.7 CM2350 B142, ISB6.7 CM2670 B153B, ISB6.7 G CM2180 B118, ISBE CM2150, ISBE CM800, ISBE2/ISBE3 CM850, ISBE4 CM850, ISD4.5 CM2150, ISD6.7 CM2880 D101, ISF2.8 CM2220, ISF2.8 CM2220 AN, ISF2.8 CM2220 EC, ISF2.8 CM2220 ECF2, ISF2.8 CM2220 F101, ISF2.8 CM2220 F117, ISF2.8 CM2220 F122, ISF2.8 CM2220 F126, ISF2.8 CM2220 F129, ISF2.8 CM2220 IAN, ISF3.8 CM2220, ISF3.8 CM2220 AN, ISF3.8 CM2220 F103, ISF3.8 CM2220 F110, ISF3.8 CM2220 F116, ISF3.8 CM2220 F134B, ISF3.8 CM2220 IAN, ISF3.8 CM2350 F109, ISF4.5 CM2220 F123, ISG11 CM2880 G106, ISG11 CM2880 G108, ISG12 CM2880 G107, ISG12 CM2880 G109, ISG12 G CMOH6.0 G111, QSB3.9 30 CM550, QSB3.9 CM2880 B138, QSB4.5 30 CM550, QSB4.5 CM2150 B108, QSB4.5 CM2250 B131, QSB4.5 CM2250 EC, QSB4.5 CM2350 B106, QSB4.5 CM2350 B122				

Cart	Ref No	Part Number	Part Description	Required	Remarks
View My Cart / Emissions Catalog					
		PE9550	Aftertreatment Device		Aftertreatment Device.... (More)
					Application: Industrial
					AT Device Type: DOC + SCR
					Voltage: 12
☐		4326869	Nitrogen Oxide Sensor	1	CES P/N A045S164.
					SCR Out.
☐		4326872	Nitrogen Oxide Sensor	1	CES P/N A045S169.
					SCR Out.
☐		4326873	Nitrogen Oxide Sensor	1	CES P/N A045S170.
☐		4326875	Temperature Sensor	1	CES P/N A045R443.
					Exhaust Gas.
☐		4329272	Decomposition Reactor	1	CES P/N A045E476.
☐		2885916	Hexagon Head Cap Screw	3	CES P/N A029Y978.

Regular Item 5, Exhibit 3

☐		4326873	Nitrogen Oxide Sensor	1	CES P/N A045S170.
☐		4329681	Aftertreatment Device Gasket	1	CES P/N A046F650.
☐		4354214	Mounting Spacer	3	CES P/N A044A201.
☐		4377370	Decomposition Reactor	1	CES P/N A050H583.
☐		5301519	Pipe Plug	1	CES P/N A041W177.
☐		5305254	Doser Injector	1	CES P/N A043C088.
☐		2880303	Heat Shield	1	CES P/N A029K707.
☐		2880305	Male Connector	1	CES P/N A029K710.
☐		2880306	O-Ring Seal	1	CES P/N A029K712.
☐		4329275	Decomposition Reactor	1	CES P/N A045L415.
☐		2885916	Hexagon Head Cap Screw	3	CES P/N A029Y978.
☐		4326873	Nitrogen Oxide Sensor	1	CES P/N A045S170.
☐		4329681	Aftertreatment Device Gasket	1	CES P/N A046F650.
☐		4354214	Mounting Spacer	3	CES P/N A044A201.
☐		4377370	Decomposition Reactor	1	CES P/N A050H583.
☐		5301519	Pipe Plug	1	CES P/N A041W177.
☐		5305254	Doser Injector	1	CES P/N A043C088.
☐		4353050	Catalyst Element	1	CES P/N A045X491.
☐		4384077	Temperature Sensor	1	
☐		4387304	Doser Fluid Supply Module	1	CES P/N A052B661.
☐		2880299	Male Connector	1	CES P/N A029K701.
					DEF Inlet Connector.
☐		2880302	O-Ring Seal	1	CES P/N A029K704.
☐		2880392	Female Connector	1	CES P/N A029M448.
☐		2880300	Male Connector	1	CES P/N A029K702.
					DEF Outlet Connector.
☐		2880396	Filler Cap	1	CES P/N A029M481.
☐		4387302	Male Connector	1	CES P/N A052B660.
		4387303	Male Connector	1	CES P/N A052G661.
☐		2880302	O-Ring Seal	1	CES P/N A029K704.
		5305270	Filter Screen	1	Service With Kit P/N 5303604.

		5305271	Filter Support	1	Service With Kit P/N 5303604.
		5305272	Service Tool	1	Service With Kit P/N 5303604.
		4393880	Catalyst Element	1	CES P/N A044T589.
☐		5303604	Filter Kit	A/R	
		5305270	Filter Screen	1	
		5305271	Filter Support	1	
		5305272	Service Tool	1	

© 2020 Cummins Inc., Box 3005, Columbus, IN 47202-3005 U.S.A.
Terms of Use and Disclaimers | Recommended System Requirements
Need Assistance? Please click on the Contact Us button in the top right corner of any page.





Parts Catalog - Option Detail

Electronic Parts Catalog - Option Detail				
Option	**Group**	**Graphic**	**Film Card**	**Date**
PH9347	05.06.1	ph957gl	T	07-NOV-11
Engines	4B3.9, 6A3.4, 6B5.9, B GAS INTERNATIONAL CM556, B4.5, B4.5 CM2350 B129B, B4.5 CM2350 B146C, B4.5 CM2350 B147B, B4.5 RGT, B4.5S, B5.9 G, B5.9 GAS PLUS CM556, B5.9 LPG, B5.9 LPG PLUS CM556, B6.7 CM2350 B121B, B6.7 CM2350 B135B, B6.7 CM2350 B136C, B6.7 CM2350 B148B, B6.7 G CMOH6.0 B125, B6.7N CM2380 B150B, B6.7S, F3.8 CM2350 F120B, F3.8 CM2350 F128C, F3.8 CM2350 F132B, F3.8 F102, G3.9, G5.9, G5.9 CM558, ISB (CHRYSLER), ISB CM2150, ISB CM2150 E, ISB CM550, ISB CM850, ISB/ISD4.5 CM2150 B119, ISB/ISD4.5 CM2150 SN, ISB/ISD6.7 CM2150 B120, ISB/ISD6.7 CM2150 SN, ISB/ISD6.7 CM2880 B126, ISB3.9 CM2220 B107, ISB4.5 CM2150, ISB5.9G CM2180, ISB6.7 2010 DCX PICKUP, ISB6.7 2013 DCX CHASSIS CAB, ISB6.7 CM2150 SQ, ISB6.7 CM2250, ISB6.7 CM2350 B101, ISB6.7 CM2350 B103, ISB6.7 CM2350 B142, ISB6.7 CM2670 B153B, ISB6.7 G CM2180 B118, ISBE CM2150, ISBE CM800, ISBE2/ISBE3 CM850, ISBE4 CM850, ISD4.5 CM2150, ISD6.7 CM2880 D101, ISF2.8 CM2220, ISF2.8 CM2220 AN, ISF2.8 CM2220 EC, ISF2.8 CM2220 ECF2, ISF2.8 CM2220 F101, ISF2.8 CM2220 F117, ISF2.8 CM2220 F122, ISF2.8 CM2220 F126, ISF2.8 CM2220 F129, ISF2.8 CM2220 IAN, ISF3.8 CM2220, ISF3.8 CM2220 AN, ISF3.8 CM2220 F103, ISF3.8 CM2220 F110, ISF3.8 CM2220 F116, ISF3.8 CM2220 F134B, ISF3.8 CM2220 IAN, ISF3.8 CM2350 F109, ISF4.5 CM2220 F123, ISG11 CM2880 G106, ISG11 CM2880 G108, ISG12 CM2880 G107, ISG12 CM2880 G109, ISG12 G CMOH6.0 G111, QSB3.9 30 CM550, QSB3.9 CM2880 B138, QSB4.5 30 CM550, QSB4.5 CM2150 B108, QSB4.5 CM2250 B131, QSB4.5 CM2250 EC, QSB4.5 CM2350 B106, QSB4.5 CM2350 B122			

Regular Item 5, Exhibit 3

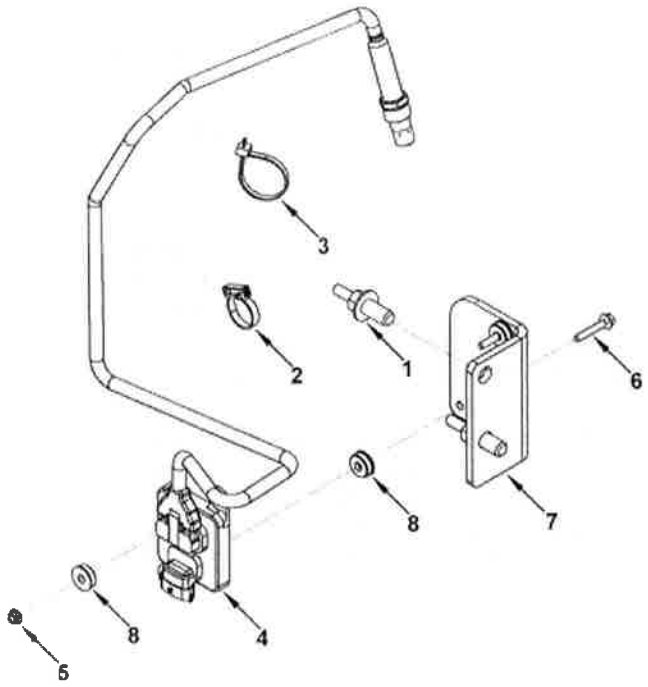

ph957gl

SMALL | MEDIUM | LARGE

Cart	Ref No	Part Number	Part Description	Required	Remarks
View My Cart					
		PH9347	Nitrogen Oxide Sensor		Nitrogen Oxide Sensor... (More)
					Voltage: 12
					Sensor Cable Length (mm): 915
					Sensor Control Module
					Location: Exhaust Side On
					Cylinder Block Hole Numbers
					5021 And 5022
					Sensor Probe Location: Either
					On Engine In XS Option Or Is
					OEM Exhaust Down Pipe

					Sensor Probe Interface: M20 X
					1.5
					Works With The Following
					Turbocharger Arrangements:
					LMRO Works With Or Without
					Air Compressor
					Retaining Wire 3965618 To
					Clip The Sensor Cable To The
					Turbocharger Water Inlet
					Flexible Hose.
☐	1	3944061	Studded Flange Cap Screw	2	
☐	2	3965618	Wire Retaining Clip	1	
☐	3	3687036	Wire Tie Clamp	1	
☐		5292668	Nitrogen Oxide Sensor	1	
☐	4	5293295	Nitrogen Oxide Sensor	1	Recon Equivalent 5293295 NX
☐	5	3282074	Hexagon Flange Nut	2	
☐	6	3944717	Captive Washer Cap Screw	2	
☐	7	5263923	Electronic Control Module Bracket	1	
☐	8	5264026	Vibration Isolator	4	

© 2020 Cummins Inc., Box 3005, Columbus, IN 47202-3005 U.S.A.
Terms of Use and Disclaimers | Recommended System Requirements
Need Assistance? Please click on the Contact Us button in the top right corner of any page.

Regular Item 5, Exhibit 3

Parts Catalog - Option Detail

Electronic Parts Catalog - Option Detail				
Option	**Group**	**Graphic**	**Film Card**	**Date**
CP9573-03	12.01	cp969gl	T	26-AUG-13
Engines	4B3.9, 6A3.4, 6B5.9, B GAS INTERNATIONAL CM556, B4.5, B4.5 CM2350 B129B, B4.5 CM2350 B146C, B4.5 CM2350 B147B, B4.5 RGT, B4.5S, B5.9 G, B5.9 GAS PLUS CM556, B5.9 LPG, B5.9 LPG PLUS CM556, B6.7 CM2350 B121B, B6.7 CM2350 B135B, B6.7 CM2350 B136C, B6.7 CM2350 B148B, B6.7 G CMOH6.0 B125, B6.7N CM2380 B150B, B6.7S, F3.8 CM2350 F120B, F3.8 CM2350 F128C, F3.8 CM2350 F132B, F3.8 F102, G3.9, G5.9, G5.9 CM558, ISB (CHRYSLER), ISB CM2150, ISB CM2150 E, ISB CM550, ISB CM850, ISB/ISD4.5 CM2150 B119, ISB/ISD4.5 CM2150 SN, ISB/ISD6.7 CM2150 B120, ISB/ISD6.7 CM2150 SN, ISB/ISD6.7 CM2880 B126, ISB3.9 CM2220 B107, ISB4.5 CM2150, ISB5.9G CM2180, ISB6.7 2010 DCX PICKUP, ISB6.7 2013 DCX CHASSIS CAB, ISB6.7 CM2150 SQ, ISB6.7 CM2250, ISB6.7 CM2350 B101, ISB6.7 CM2350 B103, ISB6.7 CM2350 B142, ISB6.7 CM2670 B153B, ISB6.7 G CM2180 B118, ISBE CM2150, ISBE CM800, ISBE2/ISBE3 CM850, ISBE4 CM850, ISD4.5 CM2150, ISD6.7 CM2880 D101, ISF2.8 CM2220, ISF2.8 CM2220 AN, ISF2.8 CM2220 EC, ISF2.8 CM2220 ECF2, ISF2.8 CM2220 F101, ISF2.8 CM2220 F117, ISF2.8 CM2220 F122, ISF2.8 CM2220 F126, ISF2.8 CM2220 F129, ISF2.8 CM2220 IAN, ISF3.8 CM2220, ISF3.8 CM2220 AN, ISF3.8 CM2220 F103, ISF3.8 CM2220 F110, ISF3.8 CM2220 F116, ISF3.8 CM2220 F134B, ISF3.8 CM2220 IAN, ISF3.8 CM2350 F109, ISF4.5 CM2220 F123, ISG11 CM2880 G106, ISG11 CM2880 G108, ISG12 CM2880 G107, ISG12 CM2880 G109, ISG12 G CMOH6.0 G111, QSB3.9 30 CM550, QSB3.9 CM2880 B138, QSB4.5 30 CM550, QSB4.5 CM2150 B108, QSB4.5 CM2250 B131, QSB4.5 CM2250 EC, QSB4.5 CM2350 B106, QSB4.5 CM2350 B122				

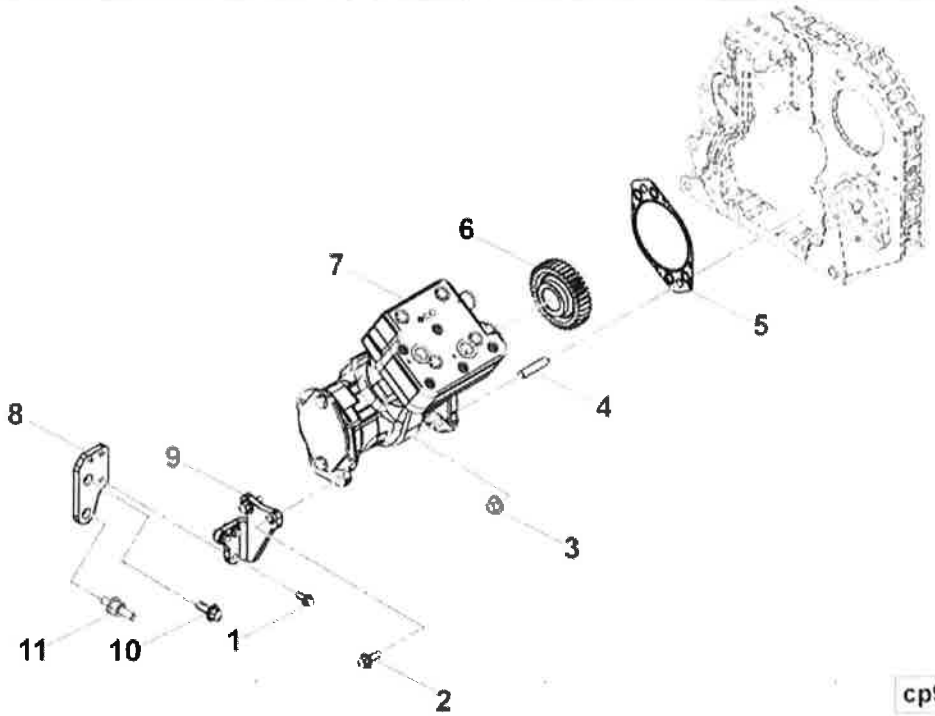

SMALL | MEDIUM | LARGE

Cart	Ref No	Part Number	Part Description	Required	Remarks

View My Cart

Regular Item 5, Exhibit 3

		CP9573-03	Air Compressor		Air Compressor
☐	1	3900630	Hexagon Flange Head Cap Screw	3	M8 X 1.25 X 20.
☐	2	3902460	Hexagon Flange Head Cap Screw	2	M10 X 1.50 X 25.
☐	3	3903210	Hexagon Flange Nut	2	M12 X 1.75.
☐	4	3905371	Double End Plain Stud	2	
☐	5	4896897	Accessory Drive Cover Gasket	1	
☐		5301082	Air Compressor	1	
☐	6	3954290	Accessory Drive Gear	1	
	7	5301102	Air Compressor	1	
☐	8	4933561	Air Compressor Brace	1	
☐	9	4933562	Air Compressor Brace	1	
☐	10	3901249	Hexagon Flange Head Cap Screw	1	M12 X 1.75 X 25.
☐	11	3944061	Studded Flange Cap Screw	1	

© 2020 Cummins Inc., Box 3005, Columbus, IN 47202-3005 U.S.A.
Terms of Use and Disclaimers | Recommended System Requirements
Need Assistance? Please click on the Contact Us button in the top right corner of any page.

Regular Item 5, Exhibit 3





Parts Catalog - Option Detail

Electronic Parts Catalog - Option Detail				
Option	**Group**	**Graphic**	**Film Card**	**Date**
2880332	11.01.1	28900gu	T	04-MAY-10
Engines	4B3.9, 6A3.4, 6B5.9, B GAS INTERNATIONAL CM556, B4.5, B4.5 CM2350 B129B, B4.5 CM2350 B146C, B4.5 CM2350 B147B, B4.5 RGT, B4.5S, B5.9 G, B5.9 GAS PLUS CM556, B5.9 LPG, B5.9 LPG PLUS CM556, B6.7 CM2350 B121B, B6.7 CM2350 B135B, B6.7 CM2350 B136C, B6.7 CM2350 B148B, B6.7 G CMOH6.0 B125, B6.7N CM2380 B150B, B6.7S, F3.8 CM2350 F120B, F3.8 CM2350 F128C, F3.8 CM2350 F132B, F3.8 F102, G3.9, G5.9, G5.9 CM558, ISB (CHRYSLER), ISB CM2150, ISB CM2150 E, ISB CM550, ISB CM850, ISB/ISD4.5 CM2150 B119, ISB/ISD4.5 CM2150 SN, ISB/ISD6.7 CM2150 B120, ISB/ISD6.7 CM2150 SN, ISB/ISD6.7 CM2880 B126, ISB3.9 CM2220 B107, ISB4.5 CM2150, ISB5.9G CM2180, ISB6.7 2010 DCX PICKUP, ISB6.7 2013 DCX CHASSIS CAB, ISB6.7 CM2150 SQ, ISB6.7 CM2250, ISB6.7 CM2350 B101, ISB6.7 CM2350 B103, ISB6.7 CM2350 B142, ISB6.7 CM2670 B153B, ISB6.7 G CM2180 B118, ISBE CM2150, ISBE CM800, ISBE2/ISBE3 CM850, ISBE4 CM850, ISD4.5 CM2150, ISD6.7 CM2880 D101, ISF2.8 CM2220, ISF2.8 CM2220 AN, ISF2.8 CM2220 EC, ISF2.8 CM2220 ECF2, ISF2.8 CM2220 F101, ISF2.8 CM2220 F117, ISF2.8 CM2220 F122, ISF2.8 CM2220 F126, ISF2.8 CM2220 F129, ISF2.8 CM2220 IAN, ISF3.8 CM2220, ISF3.8 CM2220 AN, ISF3.8 CM2220 F103, ISF3.8 CM2220 F110, ISF3.8 CM2220 F116, ISF3.8 CM2220 F134B, ISF3.8 CM2220 IAN, ISF3.8 CM2350 F109, ISF4.5 CM2220 F123, ISG11 CM2880 G106, ISG11 CM2880 G108, ISG12 CM2880 G107, ISG12 CM2880 G109, ISG12 G CMOH6.0 G111, QSB3.9 30 CM550, QSB3.9 CM2880 B138, QSB4.5 30 CM550, QSB4.5 CM2150 B108, QSB4.5 CM2250 B131, QSB4.5 CM2250 EC, QSB4.5 CM2350 B106, QSB4.5 CM2350 B122			

Regular Item 5, Exhibit 3

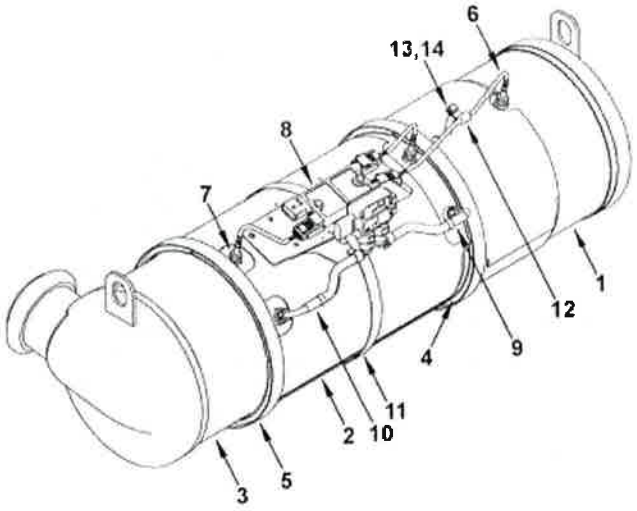

28900gu

SMALL | MEDIUM | LARGE

Cart	Ref No	Part Number	Part Description	Required	Remarks
View My Cart					
		2880332	Aftertreatment Device		Aftertreatment Device
☐	1	2880491	Inlet Catalyst Module	1	
☐	2	2871461	Particulate Filter Module	1	Recon Equivalent 2871461 NX
☐	3	2880526	Outlet Module	1	
☐	4	2871451	Aftertreatment Device Gasket	2	
☐	5	4965096	V Band Clamp	2	
	6	4984178	Temperature Sensor	1	Aftertreatment Inlet/Outlet
	7	4984179	Temperature Sensor	2	Aftertreatment Inlet/Outlet
☐	8	2871639	Aftertreatment Bracket	1	
☐	9	2871655	Air Tube	1	

☐	10	2871656	Air Tube	1	
☐	11	4965329	T-Bolt Clamp	1	
☐	12	2871507	Clip	1	
☐	13	4965094	Plain Washer	1	CES Equivalent Q348676
☐	14	2880474	Hexagon Head Cap Screw	1	M6 x 1.00 x 15

© 2020 Cummins Inc., Box 3005, Columbus, IN 47202-3005 U.S.A.
Terms of Use and Disclaimers | Recommended System Requirements
Need Assistance? Please click on the Contact Us button in the top right corner of any page.

Regular Item 5, Exhibit 3





Parts Catalog - Option Detail

Electronic Parts Catalog - Option Detail				
Option	**Group**	**Graphic**	**Film Card**	**Date**
2866452	11.01.1	28902gp	T	20-MAY-10
Engines	4B3.9, 6A3.4, 6B5.9, B GAS INTERNATIONAL CM556, B4.5, B4.5 CM2350 B129B, B4.5 CM2350 B146C, B4.5 CM2350 B147B, B4.5 RGT, B4.5S, B5.9 G, B5.9 GAS PLUS CM556, B5.9 LPG, B5.9 LPG PLUS CM556, B6.7 CM2350 B121B, B6.7 CM2350 B135B, B6.7 CM2350 B136C, B6.7 CM2350 B148B, B6.7 G CMOH6.0 B125, B6.7N CM2380 B150B, B6.7S, F3.8 CM2350 F120B, F3.8 CM2350 F128C, F3.8 CM2350 F132B, F3.8 F102, G3.9, G5.9, G5.9 CM558, ISB (CHRYSLER), ISB CM2150, ISB CM2150 E, ISB CM550, ISB CM850, ISB/ISD4.5 CM2150 B119, ISB/ISD4.5 CM2150 SN, ISB/ISD6.7 CM2150 B120, ISB/ISD6.7 CM2150 SN, ISB/ISD6.7 CM2880 B126, ISB3.9 CM2220 B107, ISB4.5 CM2150, ISB5.9G CM2180, ISB6.7 2010 DCX PICKUP, ISB6.7 2013 DCX CHASSIS CAB, ISB6.7 CM2150 SQ, ISB6.7 CM2250, ISB6.7 CM2350 B101, ISB6.7 CM2350 B103, ISB6.7 CM2350 B142, ISB6.7 CM2670 B153B, ISB6.7 G CM2180 B118, ISBE CM2150, ISBE CM800, ISBE2/ISBE3 CM850, ISBE4 CM850, ISD4.5 CM2150, ISD6.7 CM2880 D101, ISF2.8 CM2220, ISF2.8 CM2220 AN, ISF2.8 CM2220 EC, ISF2.8 CM2220 ECF2, ISF2.8 CM2220 F101, ISF2.8 CM2220 F117, ISF2.8 CM2220 F122, ISF2.8 CM2220 F126, ISF2.8 CM2220 F129, ISF2.8 CM2220 IAN, ISF3.8 CM2220, ISF3.8 CM2220 AN, ISF3.8 CM2220 F103, ISF3.8 CM2220 F110, ISF3.8 CM2220 F116, ISF3.8 CM2220 F134B, ISF3.8 CM2220 IAN, ISF3.8 CM2350 F109, ISF4.5 CM2220 F123, ISG11 CM2880 G106, ISG11 CM2880 G108, ISG12 CM2880 G107, ISG12 CM2880 G109, ISG12 G CMOH6.0 G111, QSB3.9 30 CM550, QSB3.9 CM2880 B138, QSB4.5 30 CM550, QSB4.5 CM2150 B108, QSB4.5 CM2250 B131, QSB4.5 CM2250 EC, QSB4.5 CM2350 B106, QSB4.5 CM2350 B122	

Regular Item 5, Exhibit 3

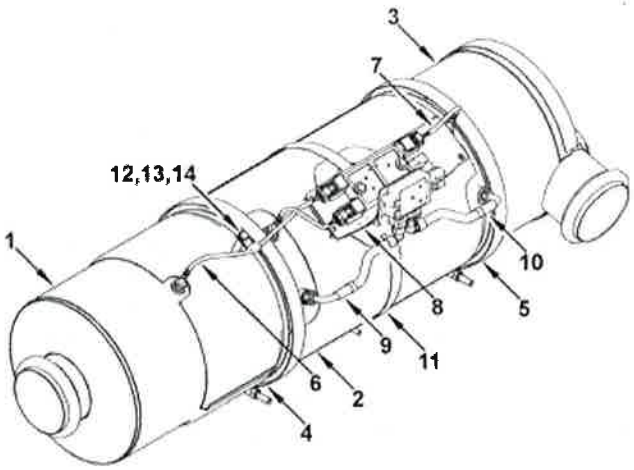

28902gp

SMALL | MEDIUM | LARGE

Cart	Ref No	Part Number	Part Description	Required	Remarks
View My Cart					
		2866452	Aftertreatment Device		Aftertreatment Device
☐	1	2871571	Inlet Catalyst Module	1	Recon Equivalent 2871571 NX
☐	2	2871462	Particulate Filter Module	1	Recon Equivalent 2871462 NX
☐	3	2871570	Outlet Module	1	
☐	4	2871451	Aftertreatment Device Gasket	2	
☐	5	2871857	V Band Clamp	2	
☐	6	2872467	Temperature Sensor	1	Aftertreatment Inlet/Outlet
☐	7	2872468	Temperature Sensor	2	Aftertreatment Inlet/Outlet
☐	8	2871636	Sensor Bracket	1	
☐	9	2888086	Air Tube	1	

☐	10	2888087	Air Tube	1	
☐	11	4965329	T-Bolt Clamp	1	
☐	12	2871507	Clip	1	
☐	13	4965094	Plain Washer	1	CES Equivalent Q348676
☐	14	2880474	Hexagon Head Cap Screw	1	M6 x 1.00 x 15

© 2020 Cummins Inc., Box 3005, Columbus, IN 47202-3005 U.S.A.
Terms of Use and Disclaimers | Recommended System Requirements
Need Assistance? Please click on the Contact Us button in the top right corner of any page.

User: 3370Smhillegass | Contact Us

Parts Catalog - Option Detail

Electronic Parts Catalog - Option Detail				
Option	**Group**	**Graphic**	**Film Card**	**Date**
2866450	11.01.1	28900gb	T	15-JUN-09
Engines	4B3.9, 6A3.4, 6B5.9, B GAS INTERNATIONAL CM556, B4.5, B4.5 CM2350 B129B, B4.5 CM2350 B146C, B4.5 CM2350 B147B, B4.5 RGT, B4.5S, B5.9 G, B5.9 GAS PLUS CM556, B5.9 LPG, B5.9 LPG PLUS CM556, B6.7 CM2350 B121B, B6.7 CM2350 B135B, B6.7 CM2350 B136C, B6.7 CM2350 B148B, B6.7 G CMOH6.0 B125, B6.7N CM2380 B150B, B6.7S, F3.8 CM2350 F120B, F3.8 CM2350 F128C, F3.8 CM2350 F132B, F3.8 F102, G3.9, G5.9, G5.9 CM558, ISB (CHRYSLER), ISB CM2150, ISB CM2150 E, ISB CM550, ISB CM850, ISB/ISD4.5 CM2150 B119, ISB/ISD4.5 CM2150 SN, ISB/ISD6.7 CM2150 B120, ISB/ISD6.7 CM2150 SN, ISB/ISD6.7 CM2880 B126, ISB3.9 CM2220 B107, ISB4.5 CM2150, ISB5.9G CM2180, ISB6.7 2010 DCX PICKUP, ISB6.7 2013 DCX CHASSIS CAB, ISB6.7 CM2150 SQ, ISB6.7 CM2250, ISB6.7 CM2350 B101, ISB6.7 CM2350 B103, ISB6.7 CM2350 B142, ISB6.7 CM2670 B153B, ISB6.7 G CM2180 B118, ISBE CM2150, ISBE CM800, ISBE2/ISBE3 CM850, ISBE4 CM850, ISD4.5 CM2150, ISD6.7 CM2880 D101, ISF2.8 CM2220, ISF2.8 CM2220 AN, ISF2.8 CM2220 EC, ISF2.8 CM2220 ECF2, ISF2.8 CM2220 F101, ISF2.8 CM2220 F117, ISF2.8 CM2220 F122, ISF2.8 CM2220 F126, ISF2.8 CM2220 F129, ISF2.8 CM2220 IAN, ISF3.8 CM2220, ISF3.8 CM2220 AN, ISF3.8 CM2220 F103, ISF3.8 CM2220 F110, ISF3.8 CM2220 F116, ISF3.8 CM2220 F134B, ISF3.8 CM2220 IAN, ISF3.8 CM2350 F109, ISF4.5 CM2220 F123, ISG11 CM2880 G106, ISG11 CM2880 G108, ISG12 CM2880 G107, ISG12 CM2880 G109, ISG12 G CMOH6.0 G111, QSB3.9 30 CM550, QSB3.9 CM2880 B138, QSB4.5 30 CM550, QSB4.5 CM2150 B108, QSB4.5 CM2250 B131, QSB4.5 CM2250 EC, QSB4.5 CM2350 B106, QSB4.5 CM2350 B122			

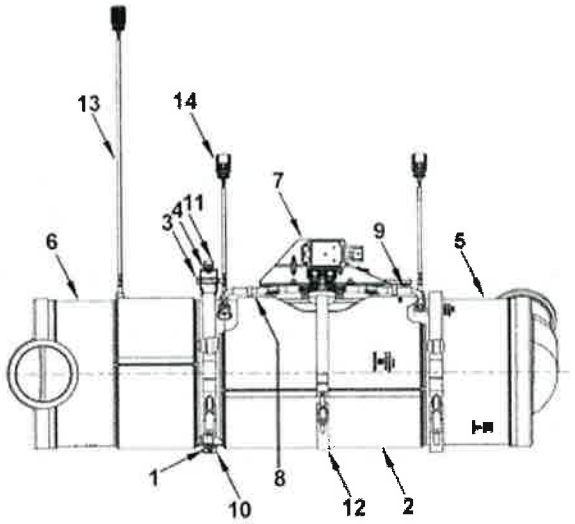

28900gb

SMALL | MEDIUM | LARGE

Cart	Ref No	Part Number	Part Description	Required	Remarks
View My Cart					
		2866450	Aftertreatment Device		Aftertreatment Device
☐	1	2871451	Aftertreatment Device Gasket	2	
☐	2	2871462	Particulate Filter Module	1	Recon Equivalent 2871462 NX
☐	3	2871505	Sensor Bracket	1	
☐	4	2871507	Clip	1	
☐	5	2871527	Outlet Module	1	
☐	6	2871567	Inlet Catalyst Module	1	
☐	7	2871640	Sensor Bracket	1	
☐	8	2871653	Air Tube	1	
☐	9	2871654	Air Tube	1	

☐	10	4965096	V Band Clamp	2	
☐	11	4965326	Hexagon Head Cap Screw	1	
☐	12	4965329	T-Bolt Clamp	1	
	13	4984178	Temperature Sensor	1	Aftertreatment Inlet/Outlet
	14	4984179	Temperature Sensor	2	Aftertreatment Inlet/Outlet

© 2020 Cummins Inc., Box 3005, Columbus, IN 47202-3005 U.S.A.
Terms of Use and Disclaimers | Recommended System Requirements
Need Assistance? Please click on the Contact Us button in the top right corner of any page.

User: 33705mhillegass | Contact Us

Parts Catalog - Option Detail

Electronic Parts Catalog - Option Detail				
Option	**Group**	**Graphic**	**Film Card**	**Date**
2880425	11.01.1	28904gd	Z	10-JUL-10
Engines	6C8.3, C GAS PLUS CM556, G8.3, G8.3 CM558, GTA8.3 CM558, ISC CM2150, ISC CM554, ISC CM850, ISC8.3 CM2250, ISC8.3 G CM2180 C101, ISL CM2150, ISL CM554, ISL CM850, ISL G CM2180, ISL8.9 CM2150 L110, ISL8.9 CM2880 L112, ISL9 CM2150 SN, ISL9 CM2250, ISL9 CM2350 L101, ISL9 CM2350 L111, ISLE4 CM850, L GAS PLUS CM556, L8.9, L8.9 L121, L8.9G CMOH2.0 L125B, L9 CM2350 L116B, L9 CM2350 L119B, L9 CM2350 L120C, L9 CM2350 L123B, L9.3 L105, L9.5 L117, L9N CM2380 L124B, QSC8.3 CM2250, QSC8.3 CM2880 C102, QSC8.3 CM554, QSC8.3 CM850(CM2850), QSL9 CM2250, QSL9 CM2250 L115, QSL9 CM2350 L102, QSL9 CM2350 L107, QSL9 CM2350 L118, QSL9 CM2350 L122, QSL9 CM554, QSL9 CM850(CM2850), QSL9 G CM558, QSL9 M CM2250 L106, QSL9.3 CM2880 L113			

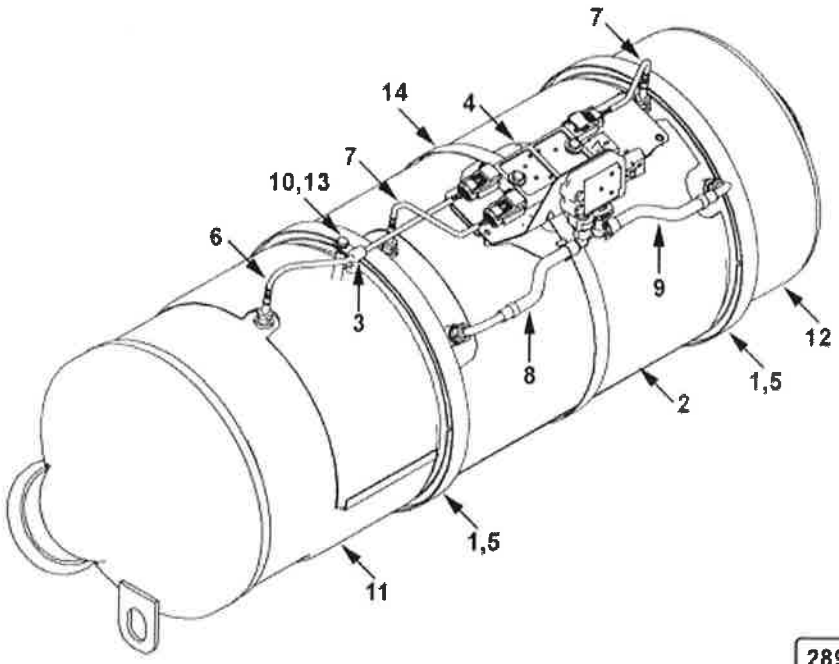

28904gd

SMALL | MEDIUM | LARGE

Cart	Ref No	Part Number	Part Description	Required	Remarks
View My Cart					
		2880425	Aftertreatment Device		MR - DEVICE, AFTERTREATMENT... (More)
					Product Model: D41 & D56
					Engine Family: ISB, ISC, ISL
					Series

☐		2880425	Device, Aftertreatme	1	
☐	1	2871452	Aftertreatment Device Gasket	2	
☐	2	2871463	Particulate Filter Module	1	ReCon Not Available in California
☐	3	2871507	Clip	1	CES Part Number
☐	4	2871638	Sensor Bracket	1	Purchase Lower
☐	5	2871858	V Band Clamp	2	
☐	6	2872467	Temperature Sensor	1	Exhaust Gas
☐	7	2872468	Temperature Sensor	2	Aftertreatment Inlet/Outlet
☐	8	2888090	Flexible Tube	1	
☐	9	2888091	Flexible Tube	1	
☐	10	2880474	Hexagon Head Cap Screw	1	M6 x 1.00 x 15
☐	11	2880589	Inlet Catalyst Module	1	
☐	12	2880634	Outlet Module	1	
☐	13	4965094	Plain Washer	2	CES Equivalent Q348676
☐	14	4965330	T-Bolt Clamp	1	

© 2020 Cummins Inc., Box 3005, Columbus, IN 47202-3005 U.S.A.
Terms of Use and Disclaimers | Recommended System Requirements
Need Assistance? Please click on the Contact Us button in the top right corner of any page.

Regular Item 5, Exhibit 3





Parts Catalog - Option Detail

Electronic Parts Catalog - Option Detail				
Option	**Group**	**Graphic**	**Film Card**	**Date**
4353399	11.01.1	null	Z	04-APR-14
Engines	6C8.3, C GAS PLUS CM556, G8.3, G8.3 CM558, GTA8.3 CM558, ISC CM2150, ISC CM554, ISC CM850, ISC8.3 CM2250, ISC8.3 G CM2180 C101, ISL CM2150, ISL CM554, ISL CM850, ISL G CM2180, ISL8.9 CM2150 L110, ISL8.9 CM2880 L112, ISL9 CM2150 SN, ISL9 CM2250, ISL9 CM2350 L101, ISL9 CM2350 L111, ISLE4 CM850, L GAS PLUS CM556, L8.9, L8.9 L121, L8.9G CMOH2.0 L125B, L9 CM2350 L116B, L9 CM2350 L119B, L9 CM2350 L120C, L9 CM2350 L123B, L9.3 L105, L9.5 L117, L9N CM2380 L124B, QSC8.3 CM2250, QSC8.3 CM2880 C102, QSC8.3 CM554, QSC8.3 CM850(CM2850), QSL9 CM2250, QSL9 CM2250 L115, QSL9 CM2350 L102, QSL9 CM2350 L107, QSL9 CM2350 L118, QSL9 CM2350 L122, QSL9 CM554, QSL9 CM850(CM2850), QSL9 G CM558, QSL9 M CM2250 L106, QSL9.3 CM2880 L113			

View My Cart

Cart	Ref No	Part Number	Part Description	Required	Remarks
		4353399	Aftertreatment Device		MR - DEVICE, AFTERTREATMENT... (More)
					Ref Option: PE9232
☐		2871452	Aftertreatment Device Gasket	2	
☐		2871507	Clip	1	
☐		2871862	V Band Clamp	2	
☐		2880474	Hexagon Head Cap Screw	1	M6 x 1.00 x 15
☐		2888090	Flexible Tube	1	
☐		4353289	Inlet Catalyst Module	1	
☐		4965094	Plain Washer	1	CES Equivalent Q348676
☐		5289960	Flexible Tube	1	
☐		5294114	Sensor Bracket	1	
☐		5294270	T-Bolt Clamp	1	
☐		5295605	Particulate Filter Module	1	ReCon Not Available in California
☐		5300558	Outlet Module	1	

© 2020 Cummins Inc., Box 3005, Columbus, IN 47202-3005 U.S.A.
Terms of Use and Disclaimers | Recommended System Requirements
Need Assistance? Please click on the Contact Us button in the top right corner of any page.

User: 33705mhillegass | Contact Us

Parts Catalog - Option Detail

Electronic Parts Catalog - Option Detail				
Option	**Group**	**Graphic**	**Film Card**	**Date**
4965138	11.01.1	49200gz	II	13-DEC-06
Engines	ISM CM570, ISM CM570/870, ISM CM875, ISM CM876, ISM CM876 E, ISM11 CM876 M103, ISM11 CM876 SN, M11 CELECT, M11 CELECT PLUS, M11 MECHANICAL, QSM11 CM570, QSM11 CM876			

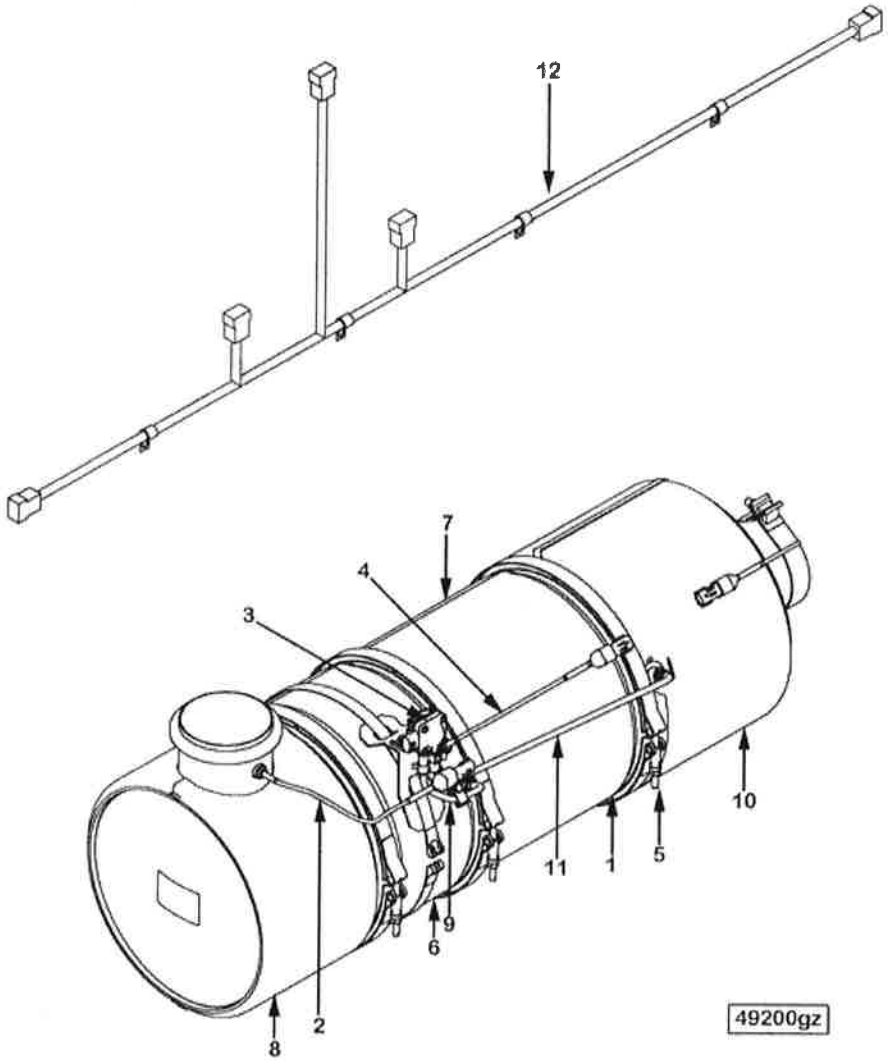

SMALL | MEDIUM | LARGE

Cart	Ref No	Part Number	Part Description	Required	Remarks
View My Cart					
					Aftertreatment Device
					PE Option Number: PE0201500
					Product Model: D35

					Certification Note: US 2007
					EPA And CARB
					HP Range: 280 - 450 BHP
					Application: Automotive
					At Device Type: Cummins
					Particulate Filter
					Flow Volume: 70 LB/MIN (1920
					ACFM At 850 Degrees F)
					Fleetguard Part No: 203245A
					Comment:
					CES P/N Inlet Module:
					Q621408
					CES P/N Outlet Module:
					Q621411
☐		4965138	Device, Aftertreatme	1	
☐	1	3684079	Aftertreatment Device Gasket	3	CES Part Number Q312162
☐	2	4902912	Temperature Sensor	2	Diesel Particulate Filter.
☐	3	4921730	Differential Pressure Sensor	1	Diesel Particulate Filter.
☐	4	4954574	Temperature Sensor	1	Diesel Particulate Filter.
☐	5	4965098	V Band Clamp	3	
☐	6	4965243	Catalyst Module	1	Recon equivalent 4965243NX
☐	7	4965244	Particulate Filter Module	1	Recon no. 4965244 NX
☐	8	4965370	Inlet Module	1	Ces part number q621408.
☐	9	4969546	Pressure Sensing Tube	1	Ces part number q621618.
☐	10	4969554	Outlet Module	1	Ces part number q621411.
☐	11	4969562	Pressure Sensing Tube	1	Ces part number q621063.
☐	12	4969632	Wiring Harness	1	Ces part number q229744
☐		4936622	Plain Hose	2	
☐		4965065	Hose Clamp	4	

© 2020 Cummins Inc., Box 3005, Columbus, IN 47202-3005 U.S.A.
Terms of Use and Disclaimers | Recommended System Requirements
Need Assistance? Please click on the Contact Us button in the top right corner of any page.

Regular Item 5, Exhibit 3

User: 33705mhilliegass | Contact Us

Parts Catalog - Option Detail

Electronic Parts Catalog - Option Detail				
Option	**Group**	**Graphic**	**Film Card**	**Date**
4965166	11.01.1	49202gt	II	24-APR-14
Engines	ISM CM570, ISM CM570/870, ISM CM875, ISM CM876, ISM CM876 E, ISM11 CM876 M103, ISM11 CM876 SN, M11 CELECT, M11 CELECT PLUS, M11 MECHANICAL, QSM11 CM570, QSM11 CM876			

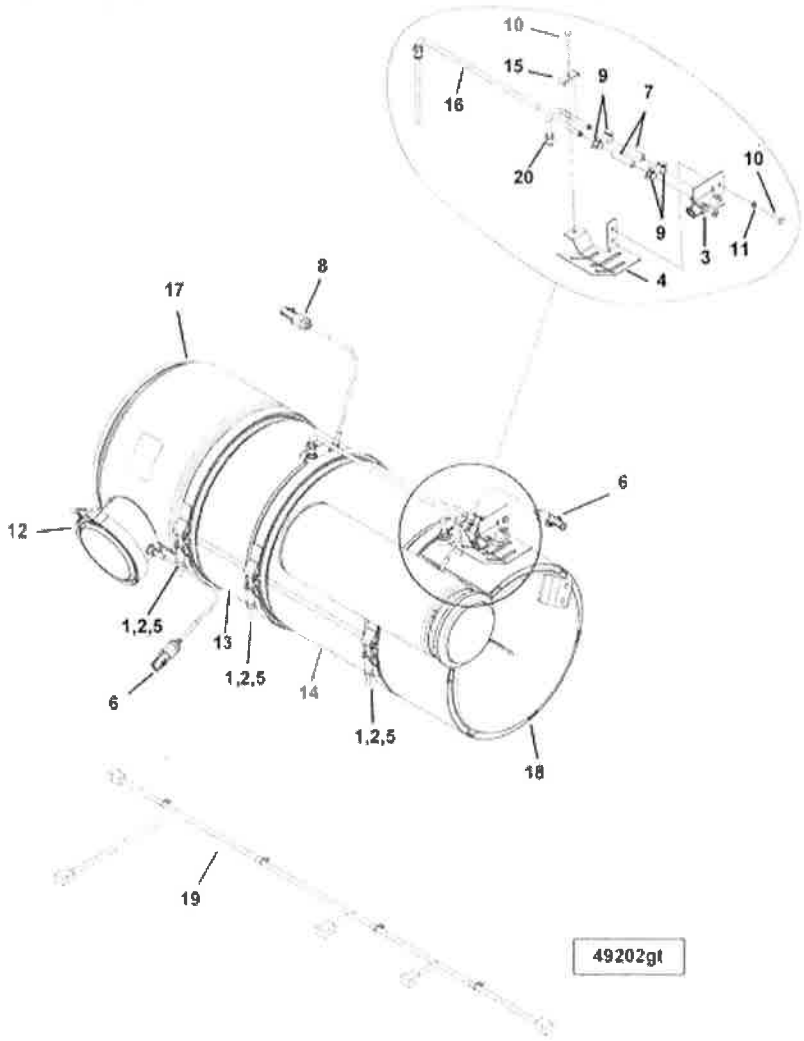

SMALL | MEDIUM | LARGE

Cart	Ref No	Part Number	Part Description	Required	Remarks
View My Cart					
					MR-AFTERTREATMENT DEVICE
☐		4965166	Device, Aftertreatme	1	
☐	1	2871863	V Band Clamp	3	

Regular Item 5, Exhibit 3

☐	2	2888291	Regular Hexagon Nut	1	
☐	3	2872211	Differential Pressure Sensor	1	Aftertreatment differential
☐	4	2880239	Heat Shield	1	
☐	5	2871453	Aftertreatment Device Gasket	3	
☐	6	4902912	Temperature Sensor	2	Diesel Particulate Filter.
☐	7	4936622	Plain Hose	2	
☐	8	4954574	Temperature Sensor	1	Diesel Particulate Filter.
☐	9	4965065	Hose Clamp	4	
☐	10	4965093	Hexagon Head Cap Screw	3	
☐	11	4965094	Plain Washer	2	CES Equivalent Q348676
☐	12	4965216	V Band Clamp	1	
☐	13	5287191	Catalyst Module	1	
☐	14	4965244	Particulate Filter Module	1	Recon no. 4965244 NX
☐	15	4965324	Tube Brace	1	
☐	16	4965327	Pressure Sensing Tube	1	
☐	17	4965376	Inlet Module	1	
☐	18	4965377	Outlet Module	1	
☐	19	4969631	Wiring Harness	1	
☐	20	4969776	Pressure Sensing Tube	1	

© 2020 Cummins Inc., Box 3005, Columbus, IN 47202-3005 U.S.A.
Terms of Use and Disclaimers | Recommended System Requirements
Need Assistance? Please click on the Contact Us button in the top right corner of any page.





Parts Catalog - Option Detail

Electronic Parts Catalog - Option Detail				
Option	**Group**	**Graphic**	**Film Card**	**Date**
PP99391	10.06	pp988ga	T	31-AUG-11
Engines	4B3.9, 6A3.4, 6B5.9, B GAS INTERNATIONAL CM556, B4.5, B4.5 CM2350 B129B, B4.5 CM2350 B146C, B4.5 CM2350 B147B, B4.5 CM2620 B158B, B4.5 RGT, B4.5S, B5.9 G, B5.9 GAS PLUS CM556, B5.9 LPG, B5.9 LPG PLUS CM556, B6.7 CM2350 B121B, B6.7 CM2350 B135B, B6.7 CM2350 B136C, B6.7 CM2350 B148B, B6.7 G CMOH6.0 B125, B6.7N CM2380 B150B, B6.7S, D4.5 CM2620 D104B, F2.8 CM2620 F135B, F2.8 CM2620 F136B, F3.8 CM2350 F120B, F3.8 CM2350 F128C, F3.8 CM2350 F132B, F3.8 CM2350 F133C, F3.8 CM2620 F137B, F3.8 F102, F4.5 CM2620 F139B, G3.9, G5.9, G5.9 CM558, ISB (CHRYSLER), ISB CM2150, ISB CM2150 E, ISB CM550, ISB CM850, ISB/ISD4.5 CM2150 B119, ISB/ISD4.5 CM2150 SN, ISB/ISD6.7 CM2150 B120, ISB/ISD6.7 CM2150 SN, ISB/ISD6.7 CM2880 B126, ISB3.9 CM2220 B107, ISB4.5 CM2150, ISB5.9G CM2180, ISB6.7 2010 DCX PICKUP, ISB6.7 2013 DCX CHASSIS CAB, ISB6.7 CM2150 SQ, ISB6.7 CM2250, ISB6.7 CM2350 B101, ISB6.7 CM2350 B103, ISB6.7 CM2350 B142, ISB6.7 G CM2180 B118, ISBE CM2150, ISBE CM800, ISBE2/ISBE3 CM850, ISBE4 CM850, ISD4.5 CM2150, ISD6.7 CM2880 D101, ISDe CM2150, ISF2.8 CM2220, ISF2.8 CM2220 AN, ISF2.8 CM2220 EC, ISF2.8 CM2220 ECCF2, ISF2.8 CM2220 ECF2, ISF2.8 CM2220 F101, ISF2.8 CM2220 F117, ISF2.8 CM2220 F122, ISF2.8 CM2220 F126, ISF2.8 CM2220 F129, ISF2.8 CM2220 IAN, ISF3.8 CM2220, ISF3.8 CM2220 AN, ISF3.8 CM2220 F103, ISF3.8 CM2220 F110, ISF3.8 CM2220 F116, ISF3.8 CM2220 F134B, ISF3.8 CM2220 IAN, ISF3.8 CM2350 F109, ISF4.5 CM2220 F123, ISG11 CM2880 G106, ISG11 CM2880 G108, ISG12 CM2880 G107, ISG12 CM2880 G109, ISG12 G CMOH6.0 G111			

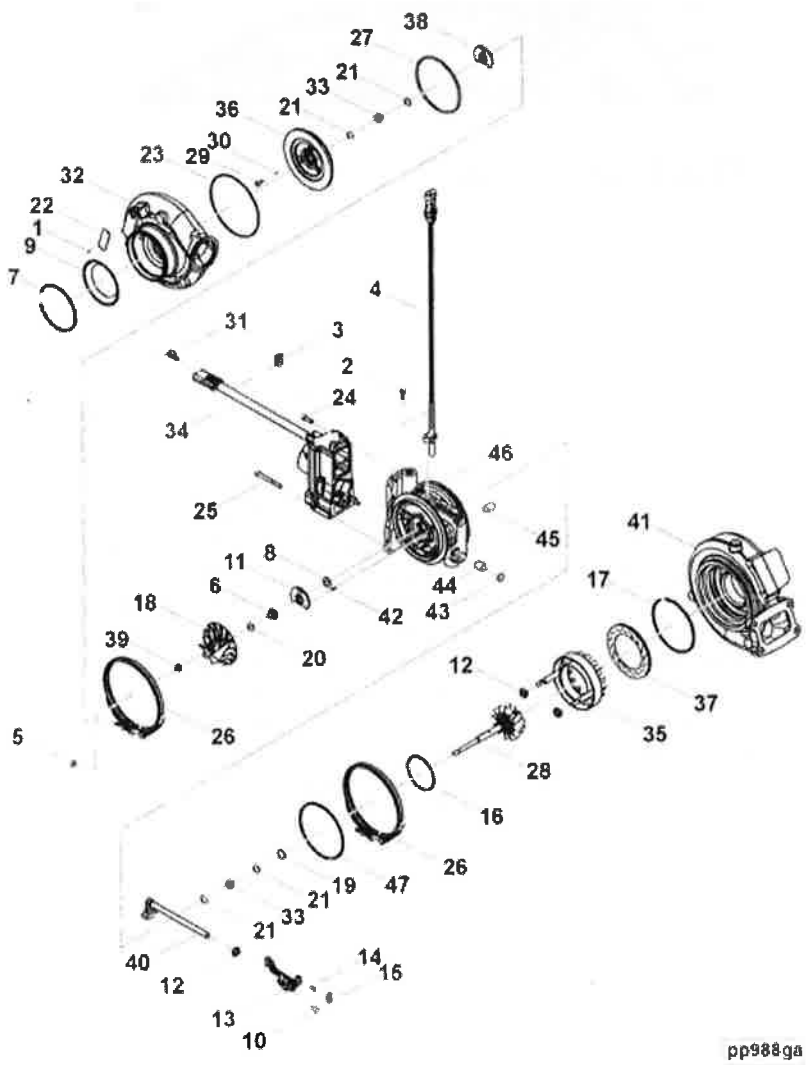

SMALL | MEDIUM | LARGE

Cart	Ref No	Part Number	Part Description	Required	Remarks
View My Cart					
		PP99391	Turbocharger		Turbocharger
☐		3771701	Turbocharger	1	
☐		3771662	Turbocharger	1	
☐	1	3519163	Drive Screw	2	
☐	2	3527184	Hexagon Flange Head Cap Screw	1	
☐	3	3965616	Wire Retaining Clip	1	
☐	4	2839964	Turbocharger Speed Sensor	1	
☐	5	3529372	Regular Hexagon Nut	2	1/4 - 28 UNF.
☐	6	3530924	Oil Slinger	1	
☐	7	3531238	Retaining Ring	1	

☐	8	3532217	Thrust Collar	1	
	9	3532427	Turbocharger Noise Baffle	1	
	10	3536549	Socket Head Cap Screw	1	
	11	3592966	Turbocharger Thrust Bearing	1	
☐	12	3595280	Oil Seal	3	
		3595957	Turbocharger Actuator Yoke	1	
	13	3595956	Turbocharger Actuator Yoke	1	
	14	3596202	Pivot Pin	2	
☐	15	3596179	Pivot Block	2	
	16	4046379	Split Ring Seal	1	
	17	3596572	Retaining Ring	1	
	18	4039431	Turbocharger Compressor Impeller	1	
☐	19	3756754	Split Ring Seal	1	
☐	20	3758848	Split Ring Seal	1	
☐	21	3762259	Retaining Ring	4	
	22	3527619	Dataplate	1	
☐	23	4041396	O-Ring Seal	1	
	24	4041397	Socket Head Cap Screw	2	
	25	4041398	Socket Head Cap Screw	2	
☐	26	2835596	V Band Clamp	2	
☐	27	4042188	O-Ring Seal	1	
☐	28	4042329	Shaft And Wheel	1	
	29	4042619	Socket Head Cap Screw	3	
	30	4042652	O-Ring Seal	3	
	31	4043330	Wire Retaining Clip	1	
	32	2839700	Compressor Housing	1	
	33	3773595	Turbocharger Bearing	2	
☐	34	2838139	Turbocharger Electric Actuator	1	
	35	4049991	Turbocharger Nozzle Ring	1	
	36	4046253	Turbocharger Diffuser	1	
	37	4046002	Turbocharger Nozzle Shroud	1	
	38	2843635	Oil Baffle	1	

☐	39	3596402	Lock Nut	1	
	40	4046130	Turbocharger Actuator Lever	1	
	41	2839992	Turbine Housing	1	
		2834647	Turbocharger Bearing Housing	1	
	42	3522597	Roll Pin	1	
	43	3534043	Orifice Plug	3	
	44	3595260	Bushing	2	
	45	3597176	Bushing	2	
	46	4045713	Turbocharger Bearing Housing	1	
	47	2835493	Split Ring Seal	1	
☐		5322348	Turbocharger Kit	A/R	For Transit Bus. All Other
					Applications Use P/N 4352330.
☐		3799846	Incomplete Turbocharger	1	
		3799829	Turbocharger	1	
☐		3678603	O-Ring Seal	2	
☐		3922794	O-Ring Seal	2	
☐		4944257	Sealing Washer	2	
☐		5260648	Turbocharger Gasket	1	
☐		5264568	Oil Drain Gasket	1	
☐		4034315	Turbocharger Actuator Kit	A/R	
☐		3798301	Turbocharger Electric Actuator	1	
☐		5347703	Wiring Harness	1	
☐		4032075	Actuator Mounting Kit	1	
		4031417	Wire Tie Clamp	4	
☐		4032987	Turbocharger Actuator Service Tool	1	
		4041397	Socket Head Cap Screw	2	
		4041398	Socket Head Cap Screw	2	
		4042648	Guide Pin	2	
		4045389	Turbocharger Gasket	1	
		4045390	Turbocharger Gasket	1	

☐		4034198	Speed Sensor Kit	A/R	Turbocharger Speed.
☐		4327174	Turbocharger Speed Sensor	1	
☐		3527184	Hexagon Flange Head Cap Screw	1	
☐		3965616	Wire Retaining Clip	2	

© 2020 Cummins Inc., Box 3005, Columbus, IN 47202-3005 U.S.A.
Terms of Use and Disclaimers | Recommended System Requirements
Need Assistance? Please click on the Contact Us button in the top right corner of any page.

User: 33705mhillegass | Contact Us

Parts Catalog - Option Detail

Electronic Parts Catalog - Option Detail				
Option	**Group**	**Graphic**	**Film Card**	**Date**
PP99391-02	10.06	pp988ga	T	28-AUG-15
Engines	4B3.9, 6A3.4, 6B5.9, B GAS INTERNATIONAL CM556, B4.5, B4.5 CM2350 B129B, B4.5 CM2350 B146C, B4.5 CM2350 B147B, B4.5 CM2620 B158B, B4.5 RGT, B4.5S, B5.9 G, B5.9 GAS PLUS CM556, B5.9 LPG, B5.9 LPG PLUS CM556, B6.7 CM2350 B121B, B6.7 CM2350 B135B, B6.7 CM2350 B136C, B6.7 CM2350 B148B, B6.7 G CMOH6.0 B125, B6.7N CM2380 B150B, B6.7S, D4.5 CM2620 D104B, F2.8 CM2620 F135B, F2.8 CM2620 F136B, F3.8 CM2350 F120B, F3.8 CM2350 F128C, F3.8 CM2350 F132B, F3.8 CM2350 F133C, F3.8 CM2620 F137B, F3.8 F102, F4.5 CM2620 F139B, G3.9, G5.9, G5.9 CM558, ISB (CHRYSLER), ISB CM2150, ISB CM2150 E, ISB CM550, ISB CM850, ISB/ISD4.5 CM2150 B119, ISB/ISD4.5 CM2150 SN, ISB/ISD6.7 CM2150 B120, ISB/ISD6.7 CM2150 SN, ISB/ISD6.7 CM2880 B126, ISB3.9 CM2220 B107, ISB4.5 CM2150, ISB5.9G CM2180, ISB6.7 2010 DCX PICKUP, ISB6.7 2013 DCX CHASSIS CAB, ISB6.7 CM2150 SQ, ISB6.7 CM2250, ISB6.7 CM2350 B101, ISB6.7 CM2350 B103, ISB6.7 CM2350 B142, ISB6.7 G CM2180 B118, ISBE CM2150, ISBE CM800, ISBE2/ISBE3 CM850, ISBE4 CM850, ISD4.5 CM2150, ISD6.7 CM2880 D101, ISDe CM2150, ISF2.8 CM2220, ISF2.8 CM2220 AN, ISF2.8 CM2220 EC, ISF2.8 CM2220 ECCF2, ISF2.8 CM2220 ECF2, ISF2.8 CM2220 F101, ISF2.8 CM2220 F117, ISF2.8 CM2220 F122, ISF2.8 CM2220 F126, ISF2.8 CM2220 F129, ISF2.8 CM2220 IAN, ISF3.8 CM2220, ISF3.8 CM2220 AN, ISF3.8 CM2220 F103, ISF3.8 CM2220 F110, ISF3.8 CM2220 F116, ISF3.8 CM2220 F134B, ISF3.8 CM2220 IAN, ISF3.8 CM2350 F109, ISF4.5 CM2220 F123, ISG11 CM2880 G106, ISG11 CM2880 G108, ISG12 CM2880 G107, ISG12 CM2880 G109, ISG12 G CMOH6.0 G111		

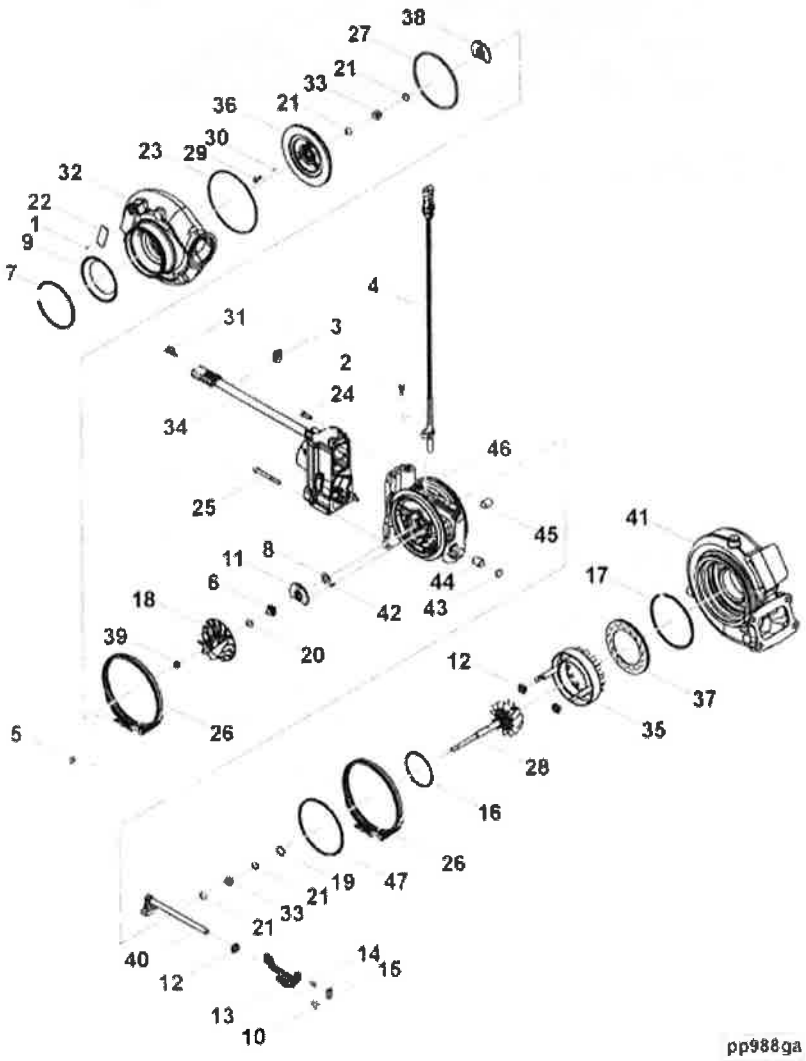

SMALL | MEDIUM | LARGE

Cart	Ref No	Part Number	Part Description	Required	Remarks
View My Cart					
		PP99391-02	Turbocharger		Turbocharger
		5325929	Turbocharger	1	
		5325925	Turbocharger	1	
☐	1	3519163	Drive Screw	2	
☐	2	3527184	Hexagon Flange Head Cap Screw	1	
☐	3	3965616	Wire Retaining Clip	1	
☐	4	2839964	Turbocharger Speed Sensor	1	
☐	5	3529372	Regular Hexagon Nut	2	1/4 - 28 UNF.
☐	6	3530924	Oil Slinger	1	
☐	7	3531238	Retaining Ring	1	

☐	8	3532217	Thrust Collar	1	
	9	3532427	Turbocharger Noise Baffle	1	
	10	3536549	Socket Head Cap Screw	1	
	11	3592966	Turbocharger Thrust Bearing	1	
☐	12	3595280	Oil Seal	3	
		3595957	Turbocharger Actuator Yoke	1	
	13	3595956	Turbocharger Actuator Yoke	1	
	14	3596202	Pivot Pin	2	
☐	15	3596179	Pivot Block	2	
	16	4046379	Split Ring Seal	1	
	17	3596572	Retaining Ring	1	
	18	4039431	Turbocharger Compressor Impeller	1	
☐	19	3756754	Split Ring Seal	1	
☐	20	3758848	Split Ring Seal	1	
☐	21	3762259	Retaining Ring	4	
	22	3527619	Dataplate	1	
☐	23	4041396	O-Ring Seal	1	
	24	4041397	Socket Head Cap Screw	2	
	25	4041398	Socket Head Cap Screw	2	
☐	26	2835596	V Band Clamp	2	
☐	27	4042188	O-Ring Seal	1	
☐	28	4042329	Shaft And Wheel	1	
	29	4042619	Socket Head Cap Screw	3	
	30	4042652	O-Ring Seal	3	
	31	4043330	Wire Retaining Clip	1	
	32	2839700	Compressor Housing	1	
	33	3773595	Turbocharger Bearing	2	
☐	34	2838139	Turbocharger Electric Actuator	1	
	35	3773719	Turbocharger Nozzle Ring	1	
	36	4046253	Turbocharger Diffuser	1	
	37	4046002	Turbocharger Nozzle Shroud	1	
	38	2843635	Oil Baffle	1	
☐	39	3596402	Lock Nut	1	

	40	4046130	Turbocharger Actuator Lever	1	
	41	2839992	Turbine Housing	1	
		3791728	Turbocharger Bearing Housing	1	
	42	3522597	Roll Pin	1	
	43	3782849	Orifice Plug	3	
	44	3595260	Bushing	2	
	45	3777608	Bushing	2	
	46	4045713	Turbocharger Bearing Housing	1	
	47	2835493	Split Ring Seal	1	
☐		5322348	Turbocharger Kit	A/R	
☐		3799846	Incomplete Turbocharger	1	
		3799829	Turbocharger	1	
☐		3678603	O-Ring Seal	2	
☐		3922794	O-Ring Seal	2	
☐		4944257	Sealing Washer	2	
☐		5260648	Turbocharger Gasket	1	
☐		5264568	Oil Drain Gasket	1	
☐		4034315	Turbocharger Actuator Kit	A/R	
☐		3798301	Turbocharger Electric Actuator	1	
☐		5347703	Wiring Harness	1	
☐		4032075	Actuator Mounting Kit	1	
		4031417	Wire Tie Clamp	4	
☐		4032987	Turbocharger Actuator Service Tool	1	
		4041397	Socket Head Cap Screw	2	
		4041398	Socket Head Cap Screw	2	
		4042648	Guide Pin	2	
		4045389	Turbocharger Gasket	1	
		4045390	Turbocharger Gasket	1	
☐		4034198	Speed Sensor Kit	A/R	Turbocharger Speed.
☐		4327174	Turbocharger Speed Sensor	1	

☐		3527184	Hexagon Flange Head Cap Screw	1	
☐		3965616	Wire Retaining Clip	2	

© 2020 Cummins Inc., Box 3005, Columbus, IN 47202-3005 U.S.A.
Terms of Use and Disclaimers | Recommended System Requirements
Need Assistance? Please click on the Contact Us button in the top right corner of any page.





Parts Catalog - Option Detail

Electronic Parts Catalog - Option Detail				
Option	**Group**	**Graphic**	**Film Card**	**Date**
CC9458-04	12.01.3	cc968gg	T	19-OCT-16
Engines	4B3.9, 6A3.4, 6B5.9, B GAS INTERNATIONAL CM556, B4.5, B4.5 CM2350 B129B, B4.5 CM2350 B146C, B4.5 CM2350 B147B, B4.5 RGT, B4.5S, B5.9 G, B5.9 GAS PLUS CM556, B5.9 LPG, B5.9 LPG PLUS CM556, B6.7 CM2350 B121B, B6.7 CM2350 B135B, B6.7 CM2350 B136C, B6.7 CM2350 B148B, B6.7 G CMOH6.0 B125, B6.7N CM2380 B150B, B6.7S, F3.8 CM2350 F120B, F3.8 CM2350 F128C, F3.8 CM2350 F132B, F3.8 F102, G3.9, G5.9, G5.9 CM558, ISB (CHRYSLER), ISB CM2150, ISB CM2150 E, ISB CM550, ISB CM850, ISB/ISD4.5 CM2150 B119, ISB/ISD4.5 CM2150 SN, ISB/ISD6.7 CM2150 B120, ISB/ISD6.7 CM2150 SN, ISB/ISD6.7 CM2880 B126, ISB3.9 CM2220 B107, ISB4.5 CM2150, ISB5.9G CM2180, ISB6.7 2010 DCX PICKUP, ISB6.7 2013 DCX CHASSIS CAB, ISB6.7 CM2150 SQ, ISB6.7 CM2250, ISB6.7 CM2350 B101, ISB6.7 CM2350 B103, ISB6.7 CM2350 B142, ISB6.7 CM2670 B153B, ISB6.7 G CM2180 B118, ISBE CM2150, ISBE CM800, ISBE2/ISBE3 CM850, ISBE4 CM850, ISD4.5 CM2150, ISD6.7 CM2880 D101, ISF2.8 CM2220, ISF2.8 CM2220 AN, ISF2.8 CM2220 EC, ISF2.8 CM2220 ECF2, ISF2.8 CM2220 F101, ISF2.8 CM2220 F117, ISF2.8 CM2220 F122, ISF2.8 CM2220 F126, ISF2.8 CM2220 F129, ISF2.8 CM2220 IAN, ISF3.8 CM2220, ISF3.8 CM2220 AN, ISF3.8 CM2220 F103, ISF3.8 CM2220 F110, ISF3.8 CM2220 F116, ISF3.8 CM2220 F134B, ISF3.8 CM2220 IAN, ISF3.8 CM2350 F109, ISF4.5 CM2220 F123, ISG11 CM2880 G106, ISG11 CM2880 G108, ISG12 CM2880 G107, ISG12 CM2880 G109, ISG12 G CMOH6.0 G111, QSB3.9 30 CM550, QSB3.9 CM2880 B138, QSB4.5 30 CM550, QSB4.5 CM2150 B108, QSB4.5 CM2250 B131, QSB4.5 CM2250 EC, QSB4.5 CM2350 B106, QSB4.5 CM2350 B122	

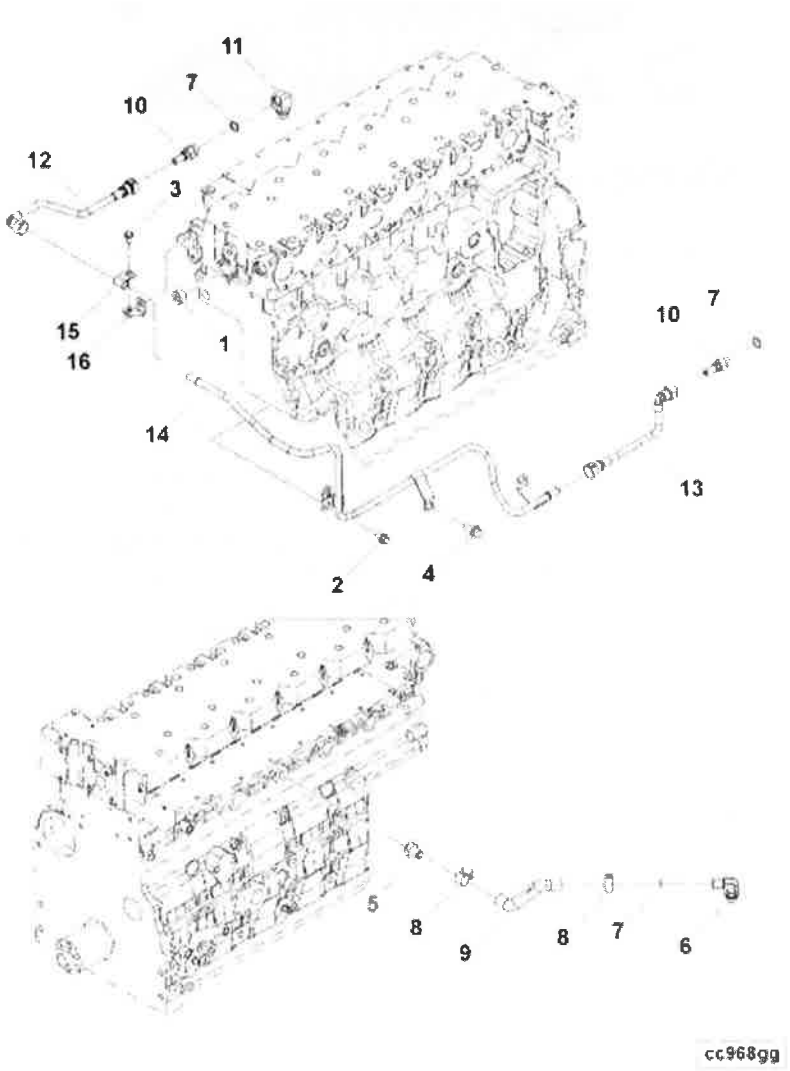

SMALL | MEDIUM | LARGE

Cart	Ref No	Part Number	Part Description	Required	Remarks
View My Cart					
		CC9458-04	Compressor Coolant Plumbing		CPR Coolant Plumbing
☐	1	4933532	Pipe Plug	1	3/4 NPT.
☐	2	3093957	Hexagon Flange Head Cap Screw	1	M10 X 1.50 X 16
☐	3	3925883	Hexagon Flange Head Cap Screw	1	M8 X 1.25 X 16
☐	4	3901249	Hexagon Flange Head Cap Screw	1	M12 X 1.75 X 25.
☐	5	3954648	Plain Hose Coupling	1	
☐	6	5318057	Elbow Hose Coupling	1	
☐	7	3046201	O-Ring Seal		
☐	8	4930304	Hose Clamp	2	23 mm Clamp.
☐	9	5396202	Hose, Molded	1	

Regular Item 5, Exhibit 3

☐		5318056	Quick Disconnect Connector	2	
	10	5318351	Quick Disconnect Connector	1	
☐	7	3046201	O-Ring Seal	1	
☐	11	5318060	Plain Union Elbow	1	
☐	12	5260936	Compressor Water Outlet Tube	1	
☐	13	5260938	Compressor Water Outlet Tube	1	
☐	14	5260950	Compressor Water Outlet Tube	1	
☐	15	68152 A	Clip	1	
☐	16	4981750	Tube Brace	1	

© 2020 Cummins Inc., Box 3005, Columbus, IN 47202-3005 U.S.A.
Terms of Use and Disclaimers | Recommended System Requirements
Need Assistance? Please click on the Contact Us button in the top right corner of any page.

User: 33705mhillegass | Contact Us

Parts Catalog - Option Detail

Electronic Parts Catalog - Option Detail				
Option	**Group**	**Graphic**	**Film Card**	**Date**
ER9322-01	11.01.1	er913gw	Z	26-AUG-16
Engines	6C8.3, C GAS PLUS CM556, G8.3, G8.3 CM558, GTA8.3 CM558, ISC CM2150, ISC CM554, ISC CM850, ISC8.3 CM2250, ISC8.3 G CM2180 C101, ISL CM2150, ISL CM554, ISL CM850, ISL G CM2180, ISL8.9 CM2150 L110, ISL8.9 CM2880 L112, ISL9 CM2150 SN, ISL9 CM2250, ISL9 CM2350 L101, ISL9 CM2350 L111, ISLE4 CM850, L GAS PLUS CM556, L8.9, L8.9 L121, L8.9G CMOH2.0 L125B, L9 CM2350 L116B, L9 CM2350 L119B, L9 CM2350 L120C, L9 CM2350 L123B, L9 CM2670 L128B, L9.3 L105, L9.5 L117, L9N CM2380 L124B, QSC8.3 CM2250, QSC8.3 CM2880 C102, QSC8.3 CM554, QSC8.3 CM850(CM2850), QSL9 CM2250, QSL9 CM2250 L115, QSL9 CM2350 L102, QSL9 CM2350 L107, QSL9 CM2350 L118, QSL9 CM2350 L122, QSL9 CM554, QSL9 CM850(CM2850), QSL9 G CM558, QSL9 M CM2250 L106, QSL9.3 CM2880 L113			

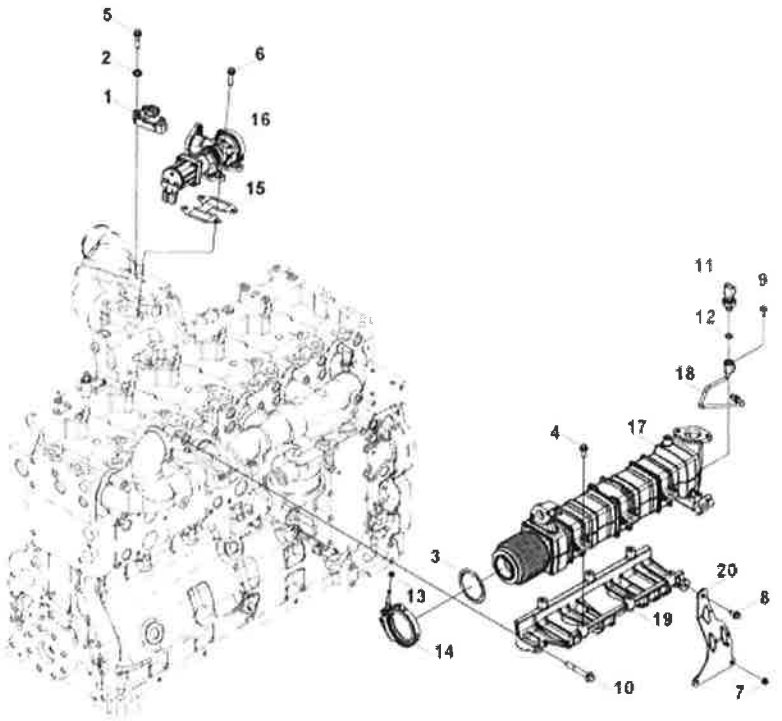

er913gw

SMALL | MEDIUM | LARGE

Cart	Ref No	Part Number	Part Description	Required	Remarks

Regular Item 5, Exhibit 3

View My Cart

		ER9322-01	Exhaust Recirculation		Exhaust Recirculation
	1	4384138	Differential Pressure Sensor	1	DFN Pressure.
	2	4384356	Rectangular Ring Seal	2	
	3	3104230	Exhaust Gas Recirculation Valve Gasket	1	EGR Cooler Outlet.
	4	3900630	Hexagon Flange Head Cap Screw	6	M8 X 1.25 X 20.
	5	3900632	Hexagon Flange Head Cap Screw	2	M8 X 1.25 X 35.
	6	3902114	Hexagon Flange Head Cap Screw	4	M8 X 1.25 X 30.
	7	3906216	Hexagon Flange Nut	3	M6 X 1.00.
	8	3900629	Hexagon Flange Head Cap Screw	1	M8 X 1.25 X 16.
	9	3936683	Hexagon Flange Head Cap Screw	1	
	10	3943933	Hexagon Flange Head Cap Screw	3	M10 X 1.50 X 68.
	11	4928594	Pressure Sensor	1	Exhaust Gas.
	12	4010519	O-Ring Seal	1	
	13	4943908	Lock Nut	1	
	14	4946823	V Band Clamp	1	
	15	5253019	Exhaust Gas Recirculation Valve Gasket	1	
	16	5271583	Exhaust Gas Recirculation Valve	1	Serviced As 4309416.
	17	5297551	Exhaust Gas Recirculation Cooler	1	
	18	5297792	Pressure Sensing Tube	1	
	19	5297796	Exhaust Gas Recirculation Module Support	1	
	20	5306383	Exhaust Recirculation Cooler Bracket	1	
		4309416	Engineering Valve Kit	A/R	
	15	5253019	Exhaust Gas Recirculation Valve Gasket	1	
	16	5271583	Exhaust Gas Recirculation Valve	1	Serviced As 4309416.
		4932615	Connection Gasket	2	EGR Valve Intake.
		4352253	Exhaust Recirculation Cooler Kit	A/R	
	3	3104230	Exhaust Gas Recirculation Valve Gasket	1	EGR Cooler Outlet.
	17	5297551	Exhaust Gas Recirculation Cooler	1	
		4932615	Connection Gasket	2	EGR Valve Intake.

		5297806	Diamond Ring Seal	2	Item Not Shown In Art.

© 2020 Cummins Inc., Box 3005, Columbus, IN 47202-3005 U.S.A.
Terms of Use and Disclaimers | Recommended System Requirements
Need Assistance? Please click on the Contact Us button in the top right corner of any page.

Regular Item 5, Exhibit 3

New Part Number	Quantity	Noun Name
4352363		Kit, EGR Cooler Upfit
5297802	1	Tube, Vent
3957942	2	Screw, Banjo Connector
4934278	9	Washer, Sealing
5272389	1	Screw, Banjo Connector
4934278	9	Washer, Sealing
5272389	1	Screw, Banjo Connector
4932953	2	Coupling, Plain Pipe
4932878	2	Union, Male
4943114	1	Connector, Banjo
4941313	1	Connector, Banjo
5298148	1	Coupling, Plain Hose
4938641	1	Union, Male
5298393	1	Tube, Vent
5297873	1	Coupling, Plain Pipe
3943933	3	Screw, Hex Flange Head

- Reference the following tables to order the parts specific to the engine:

Vent Tube:

Order the vent tube part number listed against the turbocharger option the engine is built with. To identify the turbocharger option the engine is built with, see turbocharger option (remarks section) in parts catalog on Quickserve® Online.

Turbocharger Option	Part Number	Noun Name
Low Mount Rear Out (LMRO)	None	None
Mid Mount Rear Out (MMRO) (ISC CM2150/CM2250 and ISL CM2150/CM2250)	5315014	Tube, Vent
High Mount Rear Out (HMRO) (ISC CM2150/CM2250 and ISL CM2150/CM2250)	5304041	Tube, Vent
High Mount Rear Out (HMRO) with HE300 Turbocharger (ISL CM2350 L101)	5304041 5314840	Tube, Vent Tube, Drain

Air Transfer Tube:

Reference the following table to order the air transfer tube.

Rocker Lever Cover	Part Number	Noun Name
Transit Bus Applications	5297817	Tube, Air Transfer

Regular Item 5, Exhibit 3





User: 33705mhillegass | Contact Us

Parts Catalog - Option Detail

Electronic Parts Catalog - Option Detail				
Option	**Group**	**Graphic**	**Film Card**	**Date**
FP94388	05.01	fp966go	T	08-DEC-17
Engines	4B3.9, 6A3.4, 6B5.9, B GAS INTERNATIONAL CM556, B4.5, B4.5 CM2350 B129B, B4.5 CM2350 B146C, B4.5 CM2350 B147B, B4.5 RGT, B4.5S, B5.9 G, B5.9 GAS PLUS CM556, B5.9 LPG, B5.9 LPG PLUS CM556, B6.7 CM2350 B121B, B6.7 CM2350 B135B, B6.7 CM2350 B136C, B6.7 CM2350 B148B, B6.7 G CMOH6.0 B125, B6.7N CM2380 B150B, B6.7S, F3.8 CM2350 F120B, F3.8 CM2350 F128C, F3.8 CM2350 F132B, F3.8 F102, G3.9, G5.9, G5.9 CM558, ISB (CHRYSLER), ISB CM2150, ISB CM2150 E, ISB CM550, ISB CM850, ISB/ISD4.5 CM2150 B119, ISB/ISD4.5 CM2150 SN, ISB/ISD6.7 CM2150 B120, ISB/ISD6.7 CM2150 SN, ISB/ISD6.7 CM2880 B126, ISB3.9 CM2220 B107, ISB4.5 CM2150, ISB5.9G CM2180, ISB6.7 2010 DCX PICKUP, ISB6.7 2013 DCX CHASSIS CAB, ISB6.7 CM2150 SQ, ISB6.7 CM2250, ISB6.7 CM2350 B101, ISB6.7 CM2350 B103, ISB6.7 CM2350 B142, ISB6.7 CM2670 B153B, ISB6.7 G CM2180 B118, ISBE CM2150, ISBE CM800, ISBE2/ISBE3 CM850, ISBE4 CM850, ISD4.5 CM2150, ISD6.7 CM2880 D101, ISF2.8 CM2220, ISF2.8 CM2220 AN, ISF2.8 CM2220 EC, ISF2.8 CM2220 ECF2, ISF2.8 CM2220 F101, ISF2.8 CM2220 F117, ISF2.8 CM2220 F122, ISF2.8 CM2220 F126, ISF2.8 CM2220 F129, ISF2.8 CM2220 IAN, ISF3.8 CM2220, ISF3.8 CM2220 AN, ISF3.8 CM2220 F103, ISF3.8 CM2220 F110, ISF3.8 CM2220 F116, ISF3.8 CM2220 F134B, ISF3.8 CM2220 IAN, ISF3.8 CM2350 F109, ISF4.5 CM2220 F123, ISG11 CM2880 G106, ISG11 CM2880 G108, ISG12 CM2880 G107, ISG12 CM2880 G109, ISG12 G CMOH6.0 G111, QSB3.9 30 CM550, QSB3.9 CM2880 B138, QSB4.5 30 CM550, QSB4.5 CM2150 B108, QSB4.5 CM2250 B131, QSB4.5 CM2250 EC, QSB4.5 CM2350 B106, QSB4.5 CM2350 B122	

Regular Item 5, Exhibit 3

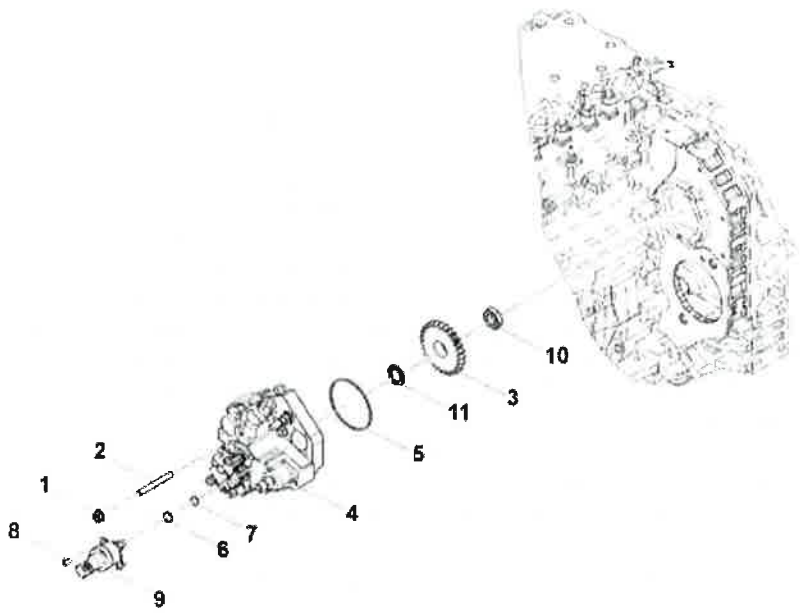

fp966go

SMALL | MEDIUM | LARGE

Cart	Ref No	Part Number	Part Description	Required	Remarks
View My Cart					
		FP94388	Fuel Pump		Fuel Pump
☐	1	3900589	Hexagon Flange Nut	3	M8 X 1.25.
☐	2	3949419	Double End Plain Stud	3	
☐	3	3955153	Fuel Pump Gear	1	
☐	4	5398557	Fuel Pump	1	
☐	5	2830977	O-Ring Seal	1	
☐	6	3947269	O-Ring Seal	1	
☐	7	3947270	O-Ring Seal	1	
☐	8	4932790	Socket Head Cap Screw	3	
☐	9	4992596	Electronic Fuel Control Actuator	1	

Regular Item 5, Exhibit 3

☐	10	4890634	Regular Hexagon Nut	1	
☐	11	5256193	Spring Washer	1	

© 2020 Cummins Inc., Box 3005, Columbus, IN 47202-3005 U.S.A.
Terms of Use and Disclaimers | Recommended System Requirements
Need Assistance? Please click on the Contact Us button in the top right corner of any page.

Regular Item 5, Exhibit 3

User: 33705mhillegass | Contact Us

Parts Catalog - Option Detail

Electronic Parts Catalog - Option Detail				
Option	**Group**	**Graphic**	**Film Card**	**Date**
FP90595	05.01	fp963ge	Z	04-MAY-05
Engines	6C8.3, C GAS PLUS CM556, G8.3, G8.3 CM558, GTA8.3 CM558, ISC CM2150, ISC CM554, ISC CM850, ISC8.3 CM2250, ISC8.3 G CM2180 C101, ISL CM2150, ISL CM554, ISL CM850, ISL G CM2180, ISL8.9 CM2150 L110, ISL8.9 CM2880 L112, ISL9 CM2150 SN, ISL9 CM2250, ISL9 CM2350 L101, ISL9 CM2350 L111, ISLE4 CM850, L GAS PLUS CM556, L8.9, L8.9 L121, L8.9G CMOH2.0 L125B, L9 CM2350 L116B, L9 CM2350 L119B, L9 CM2350 L120C, L9 CM2350 L123B, L9.3 L105, L9.5 L117, L9N CM2380 L124B, QSC8.3 CM2250, QSC8.3 CM2880 C102, QSC8.3 CM554, QSC8.3 CM850(CM2850), QSL9 CM2250, QSL9 CM2250 L115, QSL9 CM2350 L102, QSL9 CM2350 L107, QSL9 CM2350 L118, QSL9 CM2350 L122, QSL9 CM554, QSL9 CM850(CM2850), QSL9 G CM558, QSL9 M CM2250 L106, QSL9.3 CM2880 L113			

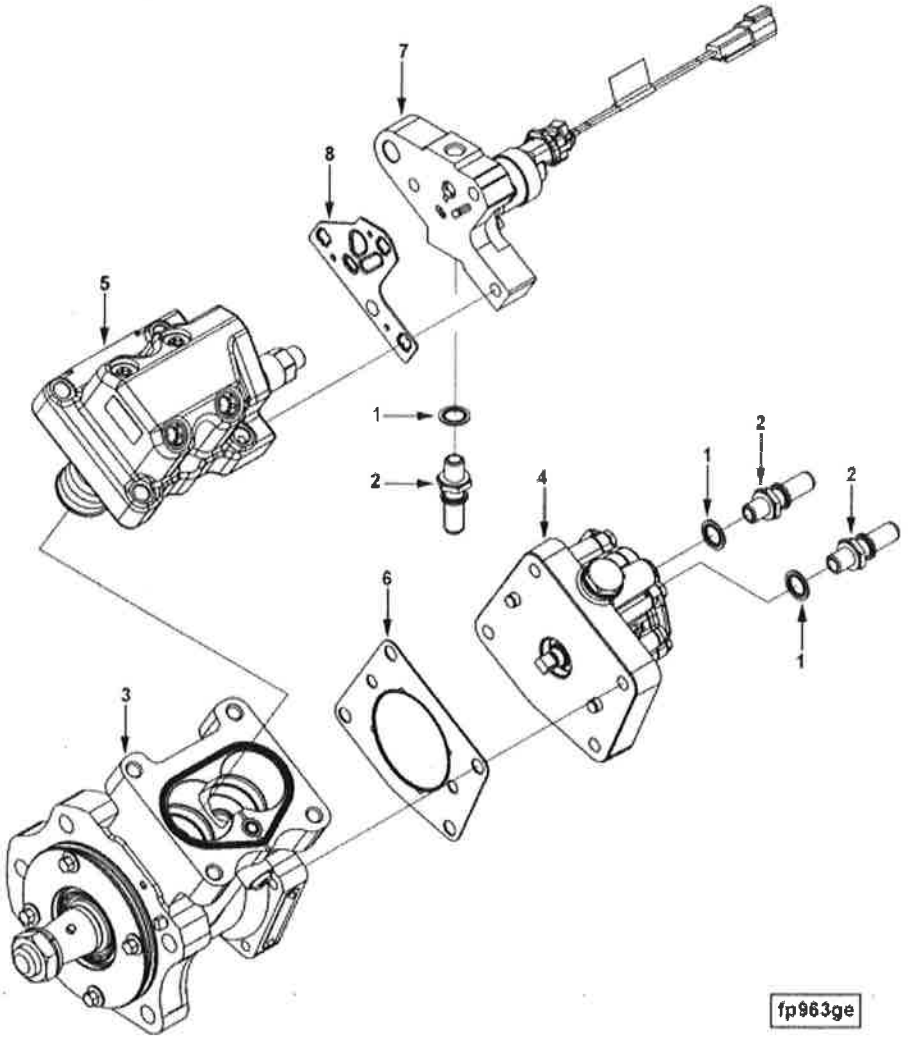

SMALL | MEDIUM | LARGE

Cart	Ref No	Part Number	Part Description	Required	Remarks

View My Cart

Regular Item 5, Exhibit 3

		FP90595	Fuel Pump		MR - PUMP, FUEL...(More)
					Fuel Pump Manufacturer/Model:
					HPCR/Cummins
					Engine Family: C & L Series
					Fuel Pump Mounting Pilot Bore
					Diameter (mm): 107
					Fuel Pump Mounting Flange
					Bolt Circle Diameter
					(mm): 130
					Fuel Pump Mounting Holes: 4
					x M12 Thru
					Unique Characteristics:
					Assembly Incorporates 1
					Quick Connect
					Fitting for Applications
					Requiring Off Engine (Remote)
					Assembly
					Similar to FP90190
					NOTE: Actuator P/N for Fuel
					Pump 4954362 is Available
					from Recon as P/N 4903523
					NX
☐		4954362	Fuel Pump	1	Individual Parts Available
☐	1	3963990	Sealing Washer	1	M12.
☐	2	3969822	Quick Disconnect Connector	1	
☐		4954315	Fuel Pump	1	
	3	4928570	Fuel Pump Body	1	Service As P/N 4307025
☐	4	4088866	Fuel Pump	1	
☐	5	4954314	Fuel Pump Head	1	
☐	6	4928575	Fuel Pump Gasket	1	

525

☐	7	4928532	Fuel Pump Adapter	1	Order Individual Parts
					3677005 NX is Adapter ONLY
☐	8	4928538	Fuel Pump Gasket	1	

© 2020 Cummins Inc., Box 3005, Columbus, IN 47202-3005 U.S.A.
Terms of Use and Disclaimers | Recommended System Requirements
Need Assistance? Please click on the Contact Us button in the top right corner of any page.

Regular Item 5, Exhibit 3

User: 33705mhillegass | Contact Us

Parts Catalog - Option Detail

Electronic Parts Catalog - Option Detail				
Option	**Group**	**Graphic**	**Film Card**	**Date**
OP9592	07.01	op966gw	Z	07-DEC-16
Engines	6C8.3, C GAS PLUS CM556, G8.3, G8.3 CM558, GTA8.3 CM558, ISC CM2150, ISC CM554, ISC CM850, ISC8.3 CM2250, ISC8.3 G CM2180 C101, ISL CM2150, ISL CM554, ISL CM850, ISL G CM2180, ISL8.9 CM2150 L110, ISL8.9 CM2880 L112, ISL9 CM2150 SN, ISL9 CM2250, ISL9 CM2350 L101, ISL9 CM2350 L111, ISLE4 CM850, L GAS PLUS CM556, L8.9, L8.9 L121, L8.9G CMOH2.0 L125B, L9 CM2350 L116B, L9 CM2350 L119B, L9 CM2350 L120C, L9 CM2350 L123B, L9.3 L105, L9.5 L117, L9N CM2380 L124B, QSC8.3 CM2250, QSC8.3 CM2880 C102, QSC8.3 CM554, QSC8.3 CM850(CM2850), QSL9 CM2250, QSL9 CM2250 L115, QSL9 CM2350 L102, QSL9 CM2350 L107, QSL9 CM2350 L118, QSL9 CM2350 L122, QSL9 CM554, QSL9 CM850(CM2850), QSL9 G CM558, QSL9 M CM2250 L106, QSL9.3 CM2880 L113			

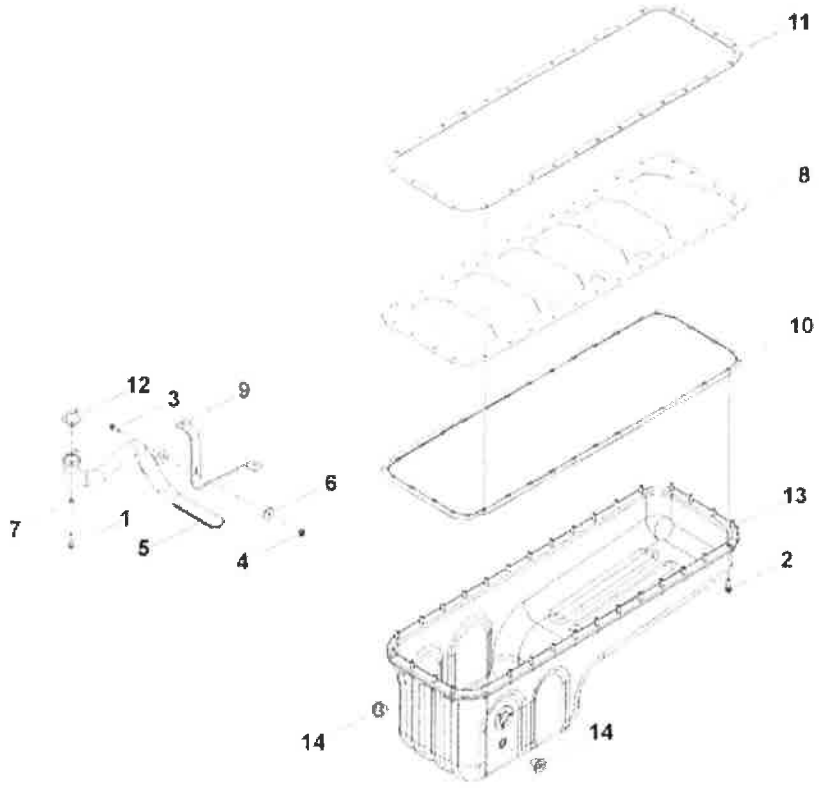

op966gw

SMALL | MEDIUM | LARGE

Cart	Ref No	Part Number	Part Description	Required	Remarks

Regular Item 5, Exhibit 3

View My Cart

		OP9592	Oil Pan		Oil Pan
☐	1	3900628	Hexagon Flange Head Cap Screw	2	M6 X 1.00 X 30.
☐	2	3900631	Hexagon Flange Head Cap Screw	32	M8 X 1.25 X 25.
☐	3	3901865	Hexagon Flange Head Cap Screw	3	M6 X 1.00 X 20.
☐	4	3906216	Hexagon Flange Nut	1	M6 X 1.00.
☐	5	3910787	Oil Suction Connection	1	
☐	6	3910960	Plain Washer	1	M6.
☐	7	3926865	Mounting Spacer	2	
☐	8	3927606	Cylinder Block Stiffener Plate	1	
☐	9	3928737	Tube Brace	1	
☐	10	5332563	Oil Pan Gasket	1	
☐	11	3930408	Oil Pan Gasket	1	
☐	12	3939352	Oil Suction Connection Gasket	1	
	13	4063453	Oil Pan	1	
☐	14	4992508	Threaded Plug	2	M22 X 1.50 X 19.

© 2020 Cummins Inc., Box 3005, Columbus, IN 47202-3005 U.S.A.
Terms of Use and Disclaimers | Recommended System Requirements
Need Assistance? Please click on the Contact Us button in the top right corner of any page.

Regular Item 5, Exhibit 3

User: 33705mhillegass | Contact Us

Parts Catalog - Option Detail

Electronic Parts Catalog - Option Detail				
Option	**Group**	**Graphic**	**Film Card**	**Date**
OP9527-01	07.01	op965gi	Z	14-APR-09
Engines	6C8.3, C GAS PLUS CM556, G8.3, G8.3 CM558, GTA8.3 CM558, ISC CM2150, ISC CM554, ISC CM850, ISC8.3 CM2250, ISC8.3 G CM2180 C101, ISL CM2150, ISL CM554, ISL CM850, ISL G CM2180, ISL8.9 CM2150 L110, ISL8.9 CM2880 L112, ISL9 CM2150 SN, ISL9 CM2250, ISL9 CM2350 L101, ISL9 CM2350 L111, ISLE4 CM850, L GAS PLUS CM556, L8.9, L8.9 L121, L8.9G CMOH2.0 L125B, L9 CM2350 L116B, L9 CM2350 L119B, L9 CM2350 L120C, L9 CM2350 L123B, L9.3 L105, L9.5 L117, L9N CM2380 L124B, QSC8.3 CM2250, QSC8.3 CM2880 C102, QSC8.3 CM554, QSC8.3 CM850(CM2850), QSL9 CM2250, QSL9 CM2250 L115, QSL9 CM2350 L102, QSL9 CM2350 L107, QSL9 CM2350 L118, QSL9 CM2350 L122, QSL9 CM554, QSL9 CM850(CM2850), QSL9 G CM558, QSL9 M CM2250 L106, QSL9.3 CM2880 L113			

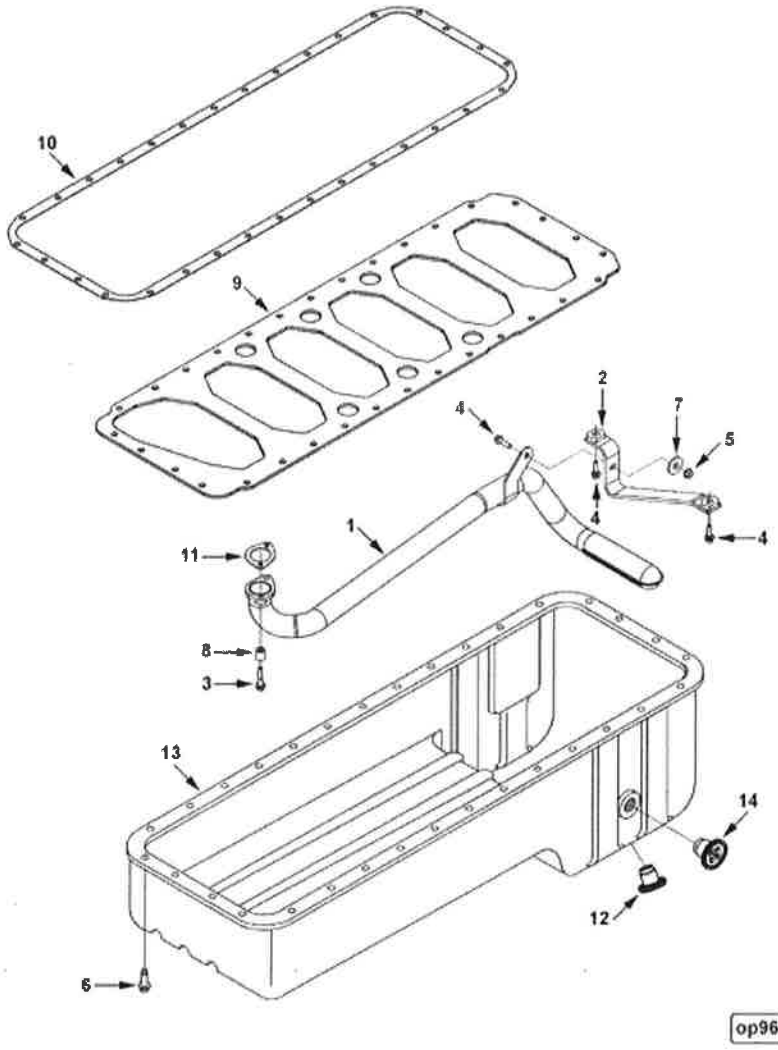

SMALL | MEDIUM | LARGE

Cart	Ref No	Part Number	Part Description	Required	Remarks

View My Cart

		OP9527-01	Oil Pan		MR - PAN, OIL...(More)
					Engine Family: L Series
					Cylinders: 6
					Sump Location: Rear
					Oil Pan Material: Stamped
					Steel
					Drain Location: Fuel Pump
					Side
					Noise Isolation Included:
					Non-Isolated
					Pan High Capacity (qt.): 23
					(21.766 L)
					Pan Low Capacity (qt.): 19
					(17.980 L)
					Pan Front Up Angularity
					(deg): 25.2
					Pan Front Down Angularity
					(deg): 45
					Pan Side to Side Angularity
					(deg): 45
					Drain Size: M18
					Drain Location: Fuel Pump
					Side
					- From Engine Centerline
					(mm): 98.2
					- From Crank Centerline
					(mm): 321.2
					- From Front Face of Block
					(mm): 724.1
					Heater Boss Size: M22
					Heater Boss Location: Fuel
					Pump Side

					- From Engine Centerline
					(mm): 125.9
					- From Crank Centerline
					(mm): 2525.7
					- From Front Face of Block
					(mm): 724.1
					Bedplate: Yes
					Oil Pan Type: Non-Isolated
					Oil Heater Thread Provision:
					M22 x 1.5-6H
					Suction Tube Flange Thickness
					(mm): 6.35
					Doweled for Flywheel
					Housing: No
					Block Flange (Width/Length,
					Hole to Hole): 282 x 883.5
					Corner Pan Stiffener
					Provided: No
					Required Dipstick
					Calibration: BFOB-Full/Low
					0-5 Deg: 58/76
☐	1	3354384	Lubricating Oil Suction Tube	1	
☐	2	3356711	Tube Brace	1	
☐	3	3900628	Hexagon Flange Head Cap Screw	2	M6 X 1.00 X 30.
☐	4	3901865	Hexagon Flange Head Cap Screw	3	M6 X 1.00 X 20.
☐	5	3906216	Hexagon Flange Nut	1	M6 X 1.00.
☐	6	3907860	Hexagon Flange Head Cap Screw	32	M8 x 1.25 x 25
☐	7	3910960	Plain Washer	1	M6
☐	8	3926865	Mounting Spacer	2	
☐	9	3927606	Cylinder Block Stiffener Plate	1	

Regular Item 5, Exhibit 3

☐	10	3930408	Oil Pan Gasket	1	
☐	11	3939352	Oil Suction Connection Gasket	1	
☐	12	3973071	Threaded Plug	1	M18 X 1.50 X 12.
☐	13	4980381	Oil Pan	1	
☐	14	4992508	Threaded Plug	1	M22 x 1.50 x 19

© 2020 Cummins Inc., Box 3005, Columbus, IN 47202-3005 U.S.A.
Terms of Use and Disclaimers | Recommended System Requirements
Need Assistance? Please click on the Contact Us button in the top right corner of any page.

Regular Item 5, Exhibit 3

User: 33705mhillegass | Contact Us

Parts Catalog - Option Detail

Electronic Parts Catalog - Option Detail				
Option	**Group**	**Graphic**	**Film Card**	**Date**
5287552	11.01.1	52100ga	IJ	05-MAY-11
Engines				

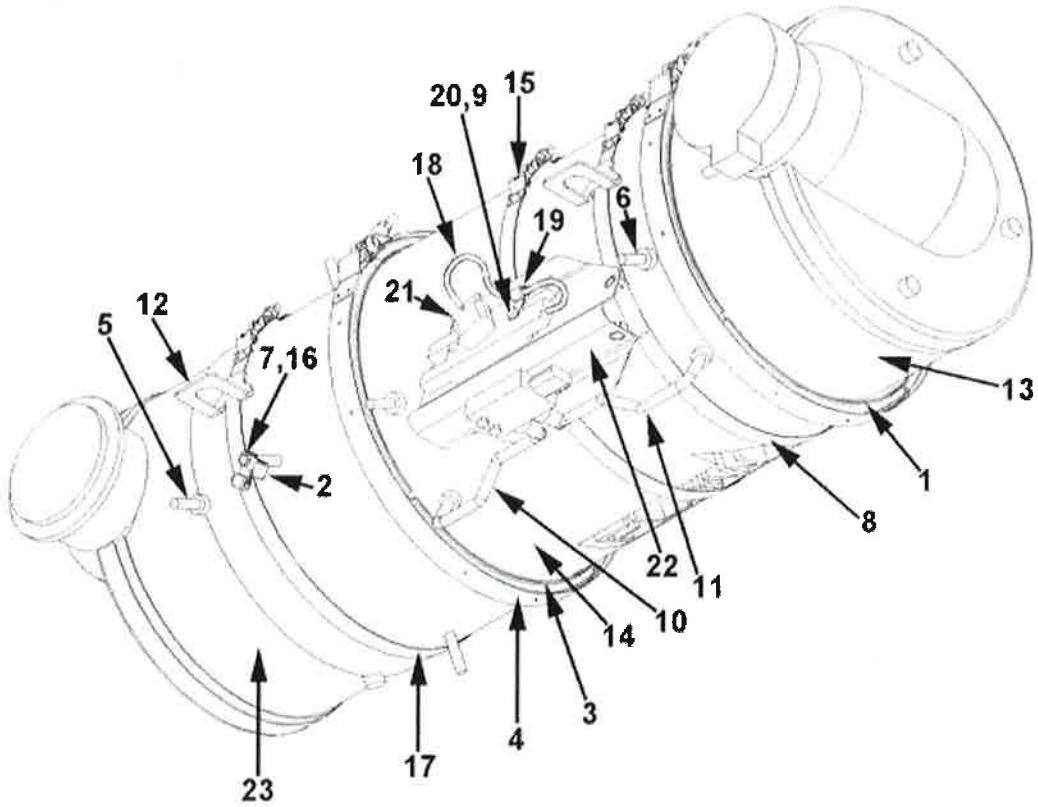

52100ga

SMALL | MEDIUM | LARGE

Cart	Ref No	Part Number	Part Description	Required	Remarks
View My Cart					
					Aftertreatment Device
☐		5287552	Device, Aftertreatme		
☐	1	2866337	Aftertreatment Device Gasket	1	
☐	2	2871507	Clip	2	
☐	3	2871827	Aftertreatment Device Gasket	2	
☐	4	2871834	V Band Clamp	2	

Regular Item 5, Exhibit 3

☐	5	2872467	Temperature Sensor	1	Aftertreatment Inlet/Outlet
☐	6	2872468	Temperature Sensor	2	Aftertreatment inlet/outlet
☐	7	2880474	Hexagon Head Cap Screw	1	M6 x 1.00 x 15
	8	2880483	V Band Clamp	1	
☐	9	2885920	Plain Washer	4	
☐	10	2885936	Flexible Tube	1	
☐	11	2885937	Flexible Tube	1	
☐	12	2888187	Aftertreatment Lifting Bracket	2	
☐	13	2888230	Outlet Module	1	
☐	14	2888231	Particulate Filter Module	1	Sold as NX
☐	15	2888232	T-Bolt Clamp	3	
☐	16	4965094	Plain Washer	1	CES Equivalent Q348676
☐	17	4965291	T-Bolt Clamp	1	
☐	18	5283507	Wiring Harness	1	
☐	19	5284068	Clip	1	
☐	20	5284265	Regular Hexagon Nut	2	
☐	21	5284266	Clip	1	
☐	22	5284282	Sensor Bracket	1	
☐	23	5285717	Inlet Catalyst Module	1	Sold as NX

© 2020 Cummins Inc., Box 3005, Columbus, IN 47202-3005 U.S.A.
Terms of Use and Disclaimers | Recommended System Requirements
Need Assistance? Please click on the Contact Us button in the top right corner of any page.

Regular Item 5, Exhibit 3





Parts Catalog - Option Detail

Electronic Parts Catalog - Option Detail				
Option	**Group**	**Graphic**	**Film Card**	**Date**
2866672	11.01.1	28905gu	T	10-OCT-10
Engines	4B3.9, 6A3.4, 6B5.9, B GAS INTERNATIONAL CM556, B4.5, B4.5 CM2350 B129B, B4.5 CM2350 B146C, B4.5 CM2350 B147B, B4.5 RGT, B4.5S, B5.9 G, B5.9 GAS PLUS CM556, B5.9 LPG, B5.9 LPG PLUS CM556, B6.7 CM2350 B121B, B6.7 CM2350 B135B, B6.7 CM2350 B136C, B6.7 CM2350 B148B, B6.7 G CMOH6.0 B125, B6.7N CM2380 B150B, B6.7S, F3.8 CM2350 F120B, F3.8 CM2350 F128C, F3.8 CM2350 F132B, F3.8 F102, G3.9, G5.9, G5.9 CM558, ISB (CHRYSLER), ISB CM2150, ISB CM2150 E, ISB CM550, ISB CM850, ISB/ISD4.5 CM2150 B119, ISB/ISD4.5 CM2150 SN, ISB/ISD6.7 CM2150 B120, ISB/ISD6.7 CM2150 SN, ISB/ISD6.7 CM2880 B126, ISB3.9 CM2220 B107, ISB4.5 CM2150, ISB5.9G CM2180, ISB6.7 2010 DCX PICKUP, ISB6.7 2013 DCX CHASSIS CAB, ISB6.7 CM2150 SQ, ISB6.7 CM2250, ISB6.7 CM2350 B101, ISB6.7 CM2350 B103, ISB6.7 CM2350 B142, ISB6.7 CM2670 B153B, ISB6.7 G CM2180 B118, ISBE CM2150, ISBE CM800, ISBE2/ISBE3 CM850, ISBE4 CM850, ISD4.5 CM2150, ISD6.7 CM2880 D101, ISF2.8 CM2220, ISF2.8 CM2220 AN, ISF2.8 CM2220 EC, ISF2.8 CM2220 ECF2, ISF2.8 CM2220 F101, ISF2.8 CM2220 F117, ISF2.8 CM2220 F122, ISF2.8 CM2220 F126, ISF2.8 CM2220 F129, ISF2.8 CM2220 IAN, ISF3.8 CM2220, ISF3.8 CM2220 AN, ISF3.8 CM2220 F103, ISF3.8 CM2220 F110, ISF3.8 CM2220 F116, ISF3.8 CM2220 F134B, ISF3.8 CM2220 IAN, ISF3.8 CM2350 F109, ISF4.5 CM2220 F123, ISG11 CM2880 G106, ISG11 CM2880 G108, ISG12 CM2880 G107, ISG12 CM2880 G109, ISG12 G CMOH6.0 G111, QSB3.9 30 CM550, QSB3.9 CM2880 B138, QSB4.5 30 CM550, QSB4.5 CM2150 B108, QSB4.5 CM2250 B131, QSB4.5 CM2250 EC, QSB4.5 CM2350 B106, QSB4.5 CM2350 B122			

Regular Item 5, Exhibit 3

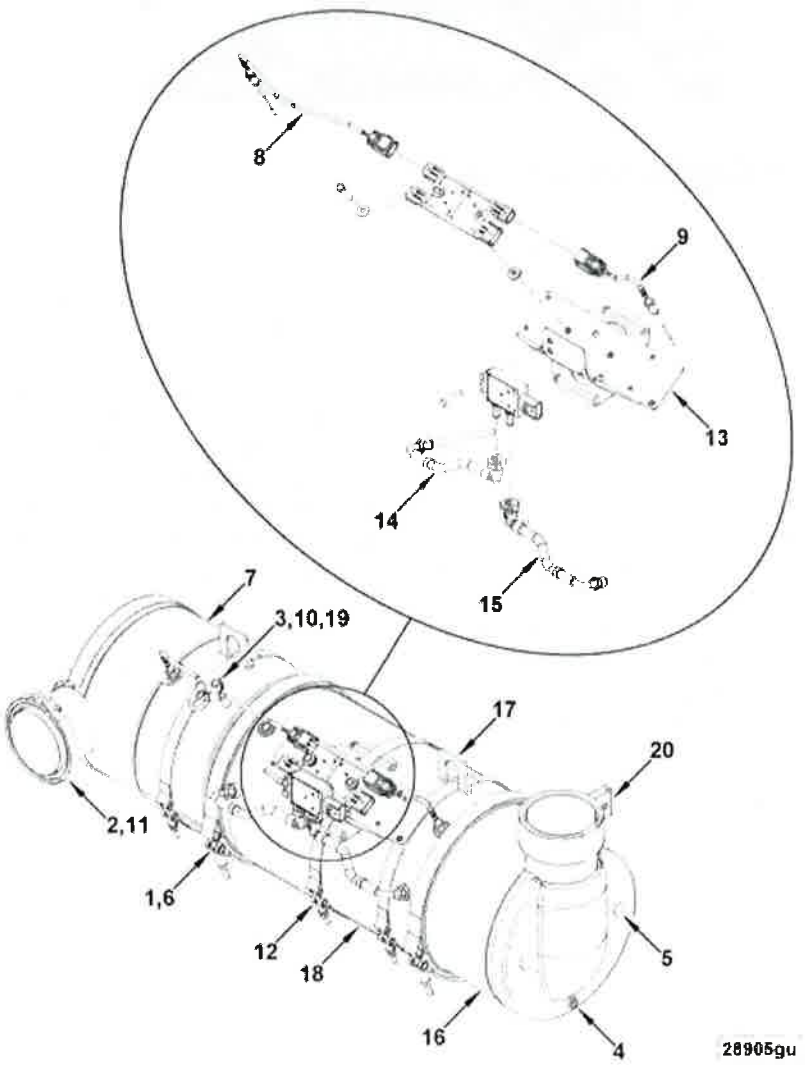

SMALL | MEDIUM | LARGE

Cart	Ref No	Part Number	Part Description	Required	Remarks
View My Cart					
		2866672	Aftertreatment Device		Aftertreatment Device
☐	1	2862447	V Band Clamp	2	
☐	2	2866636	Aftertreatment Device Inlet Gasket	1	*Item Not Shown On Graphic
☐	3	2871507	Clip	2	
☐	4	2871528	Pipe Plug	1	
☐	5	2871529	Pipe Plug	2	
☐	6	2871566	Aftertreatment Device Gasket	2	
☐	7	2871745	Inlet Catalyst Module	1	
☐	8	2872467	Temperature Sensor	1	Aftertreatment Inlet/Outlet
☐	9	2872468	Temperature Sensor	2	Aftertreatment Inlet/Outlet

Regular Item 5, Exhibit 3

☐	10	2880474	Hexagon Head Cap Screw	1	M6 x 1.00 x 15
☐	11	2880482	V Band Clamp	1	*Item Not Shown On Graphic
☐	12	2885863	T-Bolt Clamp	3	
☐	13	2885865	Aftertreatment Bracket	1	
☐	14	2885936	Flexible Tube	1	
☐	15	2885937	Flexible Tube	1	
☐	16	2888183	Outlet Module	1	
☐	17	2888187	Aftertreatment Lifting Bracket	2	
☐	18	2888190	Particulate Filter Module	1	
☐	19	4965094	Plain Washer	1	CES Equivalent Q348676
☐	20	4965323	T-Bolt Clamp	1	

© 2020 Cummins Inc., Box 3005, Columbus, IN 47202-3005 U.S.A.
Terms of Use and Disclaimers | Recommended System Requirements
Need Assistance? Please click on the Contact Us button in the top right corner of any page.

36 ✓				
Product Code: **Agency Notes:**		**Supplier Product Code:** **Supplier Notes:** Lead Time 5-7 Days		
20-13-01-37 ✓	GASKET EXHAUST ELBOW TO PIPE GILLIG - First Offer	$4.29	15 / each	$64.35
Product Code: **Agency Notes:**		**Supplier Product Code:** **Supplier Notes:** Lead Time 5-7 Days		
20-13-01-38 ✓	GASKET AFMDEVICE - First Offer	$5.10	40 / each	$204.00
Product Code: **Agency Notes:**		**Supplier Product Code:** **Supplier Notes:** Lead Time 5-7 Days		

Kirk's Automotive Inc. **$248,205.11 (38/38 items)**

Bid Contact **Al Benish**
rrk@kirksauto.com
Ph 313-933-7030

Address **9330 Roselawn**
Detroit, MI 48204

Agency Notes:	**Supplier Notes:**

Item #	Line Item	Unit Price	Qty/Unit	Total Price
20-13-01-01	GASKET PARTICULATE FILTER GILLIG1100 - First Offer	$10.75	14 / each	$150.50
Product Code: **Agency Notes:**		**Supplier Product Code:** **Supplier Notes:** Please refer to Approved Equal Request 3-4 day delivery		
20-13-01-02	SENSOR PRESSURE DIFF EXH GILLIG1100 - First Offer	$75.00	6 / each	$450.00
Product Code: **Agency Notes:**		**Supplier Product Code:** **Supplier Notes:** Please refer to Approved Equal Request		

		3-4 day delivery		
20-13-01-03	GASKET PARTICULATE GILLIG 1100 - First Offer	$6.75	20 / each	$135.00
Product Code: **Agency Notes:**		**Supplier Product Code:** **Supplier Notes:** Please refer to Approved Equal Request 3-4 day delivery		
20-13-01-04	OUTLET NOX SENSOR CHAMPION & EZ RIDER - First Offer	$299.00	9 / each	$2,691.00
Product Code: **Agency Notes:**		**Supplier Product Code:** **Supplier Notes:** Please refer to Approved Equal Request 3-4 day delivery		
20-13-	BELT MAIN NEW CHAMP - First Offer	$79.88	11 / each	$878.68

01-05				
Product Code: **Agency Notes:**		**Supplier Product Code:** **Supplier Notes:** 3-4 day delivery		
20-13-01-06	EGR UPDATE KIT GILLIG 1100 - First Offer	$669.00	5 / each	$3,345.00
Product Code: **Agency Notes:**		**Supplier Product Code:** **Supplier Notes:** 3-4 day Delivery		
20-13-01-07	COOLANT LOW SENSOR 16 17 GILLIG & EZ - First Offer	$123.00	6 / each	$738.00
Product Code: **Agency Notes:**		**Supplier Product Code:** **Supplier Notes:** 3-4 day Delivery		
20-13-01-08	DOSER VALVE SEAL KIT NEW CHAMP EASYRIDER - First Offer	$50.00	6 / each	$300.00
Product Code: **Agency Notes:**		**Supplier Product Code:** **Supplier Notes:** 3-4 day Delivery		
20-13-01-09	GASKET AIR COMP MOUNTING NEW CHAMP - First Offer	$8.38	7 / each	$58.66
Product Code: **Agency Notes:**		**Supplier Product Code:** **Supplier Notes:** Please refer to Approved Equal Request 3-4 day delivery		
20-13-01-10	GASKET EGR AIR TUBE 700 GILLIG - First Offer	$1.99	14 / each	$27.86
Product Code: **Agency Notes:**		**Supplier Product Code:** **Supplier Notes:**		

		Please refer to Approved Equal Request 3-4 day delivery		
20-13-01-11	TURBO OIL RETURN CHAMPION - First Offer	$77.00	6 / each	$462.00
Product Code: **Agency Notes:**		**Supplier Product Code:** **Supplier Notes:** 3-4 day Delivery		
20-13-01-12	DOSER VALVE DEF INJ NEWCHAMP EASY RIDER - First Offer	$225.00	6 / each	$1,350.00
Product Code: **Agency Notes:**		**Supplier Product Code:** **Supplier Notes:** Please refer to Approved Equal Request 3-4 day delivery		
20-13-01-13	EGR COOLER GILLIG - First Offer	$1,450.00	5 / each	$7,250.00
Product Code: **Agency Notes:**		**Supplier Product Code:** **Supplier Notes:** 3-4 day Delivery core $31.25		
20-13-01-14	DEF DOSING UNIT PUMP CHAMPION - First Offer	$680.00	6 / each	$4,080.00
Product Code: **Agency Notes:**		**Supplier Product Code:** **Supplier Notes:** Please refer to Approved Equal Request 3-4 day delivery		

20-13-01-15	INLET NOX SENSOR CHAMPION - First Offer	$333.99	9 / each	$3,005.91
Product Code: **Agency Notes:**		**Supplier Product Code:** **Supplier Notes:** Please refer to Approved Equal Request 3-4 day delivery		
20-13-01-16	AIR COMPRESSOR CHAMPION - First Offer	$845.00	8 / each	$6,760.00
Product Code: **Agency Notes:**		**Supplier Product Code:** **Supplier Notes:** Please refer to Approved Equal Request 3-4 day delivery core $333.00		
20-13-01-17	DPF Filter - First Offer	$2,381.81	3 / each	$7,145.43
Product Code: **Agency Notes:**		**Supplier Product Code:** **Supplier Notes:** 3-4 day delivery core $350.00		

20-13-01-18	DPF Filter - First Offer	$1,124.00	3 / each	$3,372.00
Product Code: **Agency Notes:**		**Supplier Product Code:** **Supplier Notes:** Please refer to Approved Equal Request 1 (one) day delivery		
20-13-01-19	DPF Filter - First Offer	$1,414.00	6 / each	$8,484.00
Product Code: **Agency Notes:**		**Supplier Product Code:** **Supplier Notes:** Please refer to Approved Equal Request 1 (one) day delivery		
20-13-01-20	DPF Filter - First Offer	$1,124.00	6 / each	$6,744.00
Product Code: **Agency Notes:**		**Supplier Product Code:** **Supplier Notes:** Please refer to Approved Equal Request		

		1 (one) day delivery		
20-13-01-21	DPF Filter - First Offer	$1,354.00	10 / each	$13,540.00
Product Code: **Agency Notes:**		**Supplier Product Code:** **Supplier Notes:** Please refer to Approved Equal Request 1 (one) day delivery		
20-13-01-22	DPF Filter - First Offer	$1,200.00	10 / each	$12,000.00
Product Code: **Agency Notes:**		**Supplier Product Code:** **Supplier Notes:** Please refer to Approved Equal Request 1 (one) day delivery		
20-13-01-23	DPF Filter - First Offer	$1,150.00	4 / each	$4,600.00
Product Code: **Agency Notes:**		**Supplier Product Code:** **Supplier Notes:** Please refer to Approved Equal Request 1 (one) day delivery		
20-13-01-24	DPF Filter - First Offer	$1,375.00	4 / each	$5,500.00
Product Code: **Agency Notes:**		**Supplier Product Code:** **Supplier Notes:** Please refer to Approved Equal Request 1 (one) day delivery		

20-13-01-25	Turbo Actuator Kit - First Offer	$1,575.00	4 / each	$6,300.00
Product Code: **Agency Notes:**		**Supplier Product Code:** **Supplier Notes:**		
20-13-01-26	Turbo Kit - First Offer	$3,450.82	4 / each	$13,803.28
Product Code: **Agency Notes:**		**Supplier Product Code:** **Supplier Notes:** 3-4 days delivery core $625.00		
20-13-01-27	Exhaust Bellow - First Offer	$312.00	35 / each	$10,920.00
Product Code: **Agency Notes:**		**Supplier Product Code:** **Supplier Notes:** 3-4 day Delivery		
20-13-01-28	CPR Water Outlet Tube - First Offer	$45.46	4 / each	$181.84
Product Code: **Agency Notes:**		**Supplier Product Code:** **Supplier Notes:** 3-4 day Delivery		
20-13-01-29	DEF Harness - First Offer	$647.43	10 / each	$6,474.30
Product Code: **Agency Notes:**		**Supplier Product Code:** **Supplier Notes:** 3-4 day Delivery		
20-13-01-30	EGR Cooler - First Offer	$1,399.00	20 / each	$27,980.00
Product Code: **Agency Notes:**		**Supplier Product Code:** **Supplier Notes:** 3-4 day Delivery		
20-13-01-31	EGR Cooler Kit - First Offer	$669.00	10 / each	$6,690.00
Product Code: **Agency Notes:**		**Supplier Product Code:** **Supplier Notes:** 3-4 day Delivery		

20-13-01-32	EGR Valve Kit - First Offer	$821.86	30 / each	$24,655.80
Product Code: **Agency Notes:**		**Supplier Product Code:** **Supplier Notes:** 3-4 day Delivery core 62.50		
20-13-01-33	Fuel Pump - First Offer	$2,299.00	5 / each	$11,495.00
Product Code: **Agency Notes:**		**Supplier Product Code:** **Supplier Notes:** 3-4 day Delivery core 468.75		
20-13-01-34	Fuel Pump - First Offer	$2,950.00	15 / each	$44,250.00
Product Code: **Agency Notes:**		**Supplier Product Code:** **Supplier Notes:** 3-4 day Delivery core $437.50		
20-13-01-35	GASKET, OIL PAN - First Offer	$95.00	3 / each	$285.00
Product Code: **Agency Notes:**		**Supplier Product Code:** **Supplier Notes:** Please refer to Approved Equal Information 3-4 day Delivery		
20-13-01-36	Oil Pan - First Offer	$532.00	3 / each	$1,596.00
Product Code: **Agency Notes:**		**Supplier Product Code:** **Supplier Notes:** 3-4 day Delivery		
20-13-01-37	GASKET EXHAUST ELBOW TO PIPE GILLIG - First Offer	$12.39	15 / each	$185.85
Product Code: **Agency Notes:**		**Supplier Product Code:** **Supplier Notes:** 3-4 day Delivery		
20-13-01-38	GASKET AFMDEVICE - First Offer	$8.00	40 / each	$320.00
Product Code: **Agency Notes:**		**Supplier Product Code:** **Supplier Notes:** Please refer to approved equal information 3-4 day Delivery		

Offer Total

$175,931.40 (Does not apply to percentage or no price items.)

Kirk's Automotive Inc.

Bid Contact **Al Benish**
rrk@kirksauto.com
Ph 313-933-7030

Address **9330 Roselawn**
Detroit, MI 48204

Item #	Line Item	Notes	Unit Price	Qty/Unit		Attch.	Docs
20-13-01-01	GASKET PARTICULATE FILTER GILLIG1100	**Supplier Product Code:** **Supplier Notes:** Please refer to Approved Equal Request 3-4 day delivery	**First Offer -** $10.75	14 / each	**$150.50**	**Y**	**Y**
20-13-01-02	SENSOR PRESSURE DIFF EXH GILLIG1100	**Supplier Product Code:** **Supplier Notes:** Please refer to Approved Equal Request 3-4 day delivery	**First Offer -** $75.00	6 / each	**$450.00**	**Y**	**Y**
20-13-01-03	GASKET PARTICULATE GILLIG 1100	**Supplier Product Code:** **Supplier Notes:** Please refer to Approved Equal Request 3-4 day delivery	**First Offer -** $6.75	20 / each	**$135.00**	**Y**	**Y**

20-13-01-04	OUTLET NOX SENSOR CHAMPION & EZ RIDER	**Supplier Product Code:** **Supplier Notes:** Please refer to Approved Equal Request 3-4 day delivery	**First Offer -** $299.00	9 / each	**$2,691.00**	Y	Y
20-13-01-05	BELT MAIN NEW CHAMP	**Supplier Product Code:** **Supplier Notes:** 3-4 day delivery	**First Offer -** $79.88	11 / each	**$878.68**		Y
20-13-01-06	EGR UPDATE KIT GILLIG 1100	**Supplier Product Code:** **Supplier Notes:** 3-4 day Delivery	**First Offer -** $669.00	5 / each	**$3,345.00**		Y
20-13-01-07	COOLANT LOW SENSOR 16 17 GILLIG & EZ	**Supplier Product Code:** **Supplier Notes:** 3-4 day Delivery	**First Offer -** $123.00	6 / each	**$738.00**		Y
20-13-01-08	DOSER VALVE SEAL KIT NEW CHAMP EASYRIDER	**Supplier Product Code:** **Supplier Notes:** 3-4 day Delivery	**First Offer -** $50.00	6 / each	**$300.00**		Y
20-13-01-09	GASKET AIR COMP MOUNTING NEW CHAMP	**Supplier Product Code:** **Supplier Notes:** Please refer to Approved Equal Request 3-4 day delivery	**First Offer -** $8.38	7 / each	**$58.66**	Y	Y

20-13-01-10	GASKET EGR AIR TUBE 700 GILLIG	**Supplier Product Code:** **Supplier Notes:** Please refer to Approved Equal Request 3-4 day delivery	**First Offer -** $1.99	14 / each	**$27.86**	Y	Y
20-13-01-11	TURBO OIL RETURN CHAMPION	**Supplier Product Code:** **Supplier Notes:** 3-4 day Delivery	**First Offer -** $77.00	6 / each	**$462.00**		Y
20-13-01-12	DOSER VALVE DEF INJ NEWCHAMP EASY RIDER	**Supplier Product Code:** **Supplier Notes:** Please refer to Approved Equal Request 3-4 day delivery	**First Offer -** $225.00	6 / each	**$1,350.00**	Y	Y
20-13-01-13	EGR COOLER GILLIG	**Supplier Product Code:** **Supplier Notes:** 3-4 day Delivery core $31.25	**First Offer -** $1,450.00	5 / each	**$7,250.00**		Y
20-13-01-14	DEF DOSING UNIT PUMP CHAMPION	**Supplier Product Code:** **Supplier Notes:** Please refer to Approved Equal Request 3-4 day delivery	**First Offer -** $680.00	6 / each	**$4,080.00**	Y	Y
20-13-01-15	INLET NOX SENSOR	**Supplier Product Code:**	**First Offer -** $333.99	9 / each	**$3,005.91**	Y	Y

	CHAMPION	**Supplier Notes:** Please refer to Approved Equal Request 3-4 day delivery					
20-13-01-16	AIR COMPRESSOR CHAMPION	**Supplier Product Code:** **Supplier Notes:** Please refer to Approved Equal Request 3-4 day delivery core $333.00	**First Offer -** $845.00	8 / each	**$6,760.00**	Y	Y
20-13-01-17	DPF Filter	**Supplier Product Code:** **Supplier Notes:** 3-4 day delivery core $350.00	**First Offer -** $2,381.81	3 / each	**$7,145.43**		Y
20-13-01-18	DPF Filter	**Supplier Product Code:** **Supplier Notes:** Please refer to Approved Equal Request 1 (one) day delivery	**First Offer -** $1,124.00	3 / each	**$3,372.00**	Y	Y

20-13-01-19	DPF Filter	**Supplier Product Code:** **Supplier Notes:** Please refer to Approved Equal Request 1 (one) day delivery	**First Offer -** $1,414.00	6 / each	**$8,484.00**	**Y**	**Y**
20-13-01-20	DPF Filter	**Supplier Product Code:** **Supplier Notes:** Please refer to Approved Equal Request 1 (one) day delivery	**First Offer -** $1,124.00	6 / each	**$6,744.00**	**Y**	**Y**
20-13-01-21	DPF Filter	**Supplier Product Code:** **Supplier Notes:** Please refer to Approved Equal Request 1 (one) day delivery	**First Offer -** $1,354.00	10 / each	**$13,540.00**	**Y**	**Y**
20-13-01-22	DPF Filter	**Supplier Product Code:** **Supplier Notes:** Please refer to Approved Equal Request 1 (one) day delivery	**First Offer -** $1,200.00	10 / each	**$12,000.00**	**Y**	**Y**

20-13-01-23	DPF Filter	**Supplier Product Code:** **Supplier Notes:** Please refer to Approved Equal Request 1 (one) day delivery	**First Offer -** $1,150.00	4 / each	**$4,600.00**	Y	Y
20-13-01-24	DPF Filter	**Supplier Product Code:** **Supplier Notes:** Please refer to Approved Equal Request 1 (one) day delivery	**First Offer -** $1,375.00	4 / each	**$5,500.00**	Y	Y
20-13-01-25	Turbo Actuator Kit	**Supplier Product Code:**	**First Offer -** $1,575.00	4 / each	**$6,300.00**		Y
20-13-01-26	Turbo Kit	**Supplier Product Code:** **Supplier Notes:** 3-4 days delivery core $625.00	**First Offer -** $3,450.82	4 / each	**$13,803.28**		Y
20-13-01-27	Exhaust Bellow	**Supplier Product Code:** **Supplier Notes:** 3-4 day Delivery	**First Offer -** $312.00	35 / each	**$10,920.00**		Y
20-13-01-28	CPR Water Outlet Tube	**Supplier Product Code:** **Supplier Notes:** 3-4 day Delivery	**First Offer -** $45.46	4 / each	**$181.84**		Y
20-13-01-29	DEF Harness	**Supplier Product Code:** **Supplier Notes:** 3-4 day Delivery	**First Offer -** $647.43	10 / each	**$6,474.30**		Y
20-13-01-30	EGR Cooler	**Supplier Product Code:**	**First Offer -** $1,399.00	20 / each	**$27,980.00**		Y

		Supplier Notes: 3-4 day Delivery					
20-13-01-31	EGR Cooler Kit	**Supplier Product Code: Supplier Notes:** 3-4 day Delivery	**First Offer -** $669.00	10 / each	**$6,690.00**		**Y**
20-13-01-32	EGR Valve Kit	**Supplier Product Code: Supplier Notes:** 3-4 day Delivery core 62.50	**First Offer -** $821.86	30 / each	**$24,655.80**		**Y**
20-13-01-33	Fuel Pump	**Supplier Product Code: Supplier Notes:** 3-4 day Delivery core 468.75	**First Offer -** $2,299.00	5 / each	**$11,495.00**		**Y**
20-13-01-34	Fuel Pump	**Supplier Product Code: Supplier Notes:** 3-4 day Delivery core $437.50	**First Offer -** $2,950.00	15 / each	**$44,250.00**		**Y**
20-13-01-35	GASKET, OIL PAN	**Supplier Product Code: Supplier Notes:** Please refer to Approved Equal Information 3-4 day Delivery	**First Offer -** $95.00	3 / each	**$285.00**	**Y**	**Y**
20-13-01-36	Oil Pan	**Supplier Product Code: Supplier Notes:** 3-4 day Delivery	**First Offer -** $532.00	3 / each	**$1,596.00**		**Y**
20-13-01-37	GASKET EXHAUST ELBOW TO PIPE GILLIG	**Supplier Product Code: Supplier Notes:** 3-4 day Delivery	**First Offer -** $12.39	15 / each	**$185.85**		**Y**
20-13-01-38	GASKET AFMDEVICE	**Supplier Product Code: Supplier Notes:** Please refer to approved	**First Offer -** $8.00	40 / each	**$320.00**		**Y**

	equal information 3-4 day Delivery			

Supplier Total **$248,205.11**

Kirk's Automotive Inc.

Item: **GASKET PARTICULATE FILTER GILLIG1100**

Attachments

Request For Approved Equals ENVIRO GASKETS.pdf

April 30 / 2020
Solicitation 20-13
Cummins Auto Parts Bid
Item Number: 20-13-01-38
BAR? N_pr L s k `cpq8 0644414
BCQAPGNRGML8 E?QICR ?DK BCTGAC
Kirk's Part Number: 1057

Grc k L s k `cp8 0.+/1+./+.1
BAR? N_pr L s k `cpq8 066.0/3
Bcqapgnrgml8 GASKET PARTICULATE GILLIG
Kirk's Part Number: 1056

Item Number: 20-13-01-01
DCTA Part Numbers: 2871452
Description: GASKET PARTICULATE FILTER
Kirk's Part Number: 1052

Exception to L. Delivery Schedules - NAPA parts will be delivered in three (3) to four (4) business days.

Kirk's Automotive, inc
9330 Roselawn
Detroit, MI 48204
313-255-7030

DPF Gasket Specs						
Part Number	OEM Number	Dimensions	Make	Model	Clamp Cross	Type
ENV-G-1057	2866636 / Q312526 / 3846392C1 / 21021846	4" ID x 4.75" OD	Cummins - Volvo/Mack - Paccar	ISB/ISC/ISL - PX6/PX8	ENV-CL-1057	
ENV-G-1056	2880215 / A029E744 / A4709971245 / 1827320	4.88" ID x 6.25" OD	Cummins - Volvo/Mack		ENV-CL-1056	
ENV-G-1052	2871452	11.02" ID x 11.81" OD	Cummins - Paccar	ISC/ISL - PX8		

Kirk's Automotive Inc.

Item: **SENSOR PRESSURE DIFF EXH GILLIG1100**

Attachments

Request For Approved Equals NAPA.pdf

Request for Approved Equals
Solicitation 20-13
Cummins Auto Parts Bid

Item Number 20-13-01-02
Gillig Number 2871960
Description: SENSOR PRESSURE DIFF EXH
Approved Equal Part Number:
NAPA NHD40971271

Exception to L. Delivery Schedules - NAPA parts will be delivered in three (3) to four (4) business days.

Requested By:

Kirk's Automotive, Inc.
9330 Roselawn, St.
Detroit, MI 48204
800-321-5989
www.Kirksonline.net

04/30/20 06:03 PM P A R T I M A G E Page 1

Part: 40971271 Line: NHD Desc: DPF PRESSURE SENSOR



Sensor - Back View

Features & Benefits
The Diesel Particulate Filter (DPF) Pressure Sensor measures exhaust pressure, indicating if the Diesel Particulate Filter is clogged. Replacement is essential for better overall drivability and lessens the chance of reduced engine power.; Direct replacement for a proper fit every time; Constructed of copper, rubber and plastic for performance and durability; Easy to install - no special tools required during installation; This part has undergone vehicle try-on testing to meet product standards and quality; The Diesel Particulate Filter (DPF) Pressure Sensor measures exhaust pressure, indicating if the Diesel Particulate Filter is clogged. Replacement is essential for better overall drivability and lessens the chance of reduced engine power.

Attributes
Brand: NAPA
Package Contents: 1 DPF Pressure Sensor
Sub Brand: OE Solutions
UNSPSC: 41111927

04/30/20 06:03 PM P A R T I M A G E Page 2

Part: 40971271 Line: NHD Desc: DPF PRESSURE SENSOR



Part: 40971271 Line: NHD Desc: DPF PRESSURE SENSOR



Sensor - Front View

*** End of Report ***

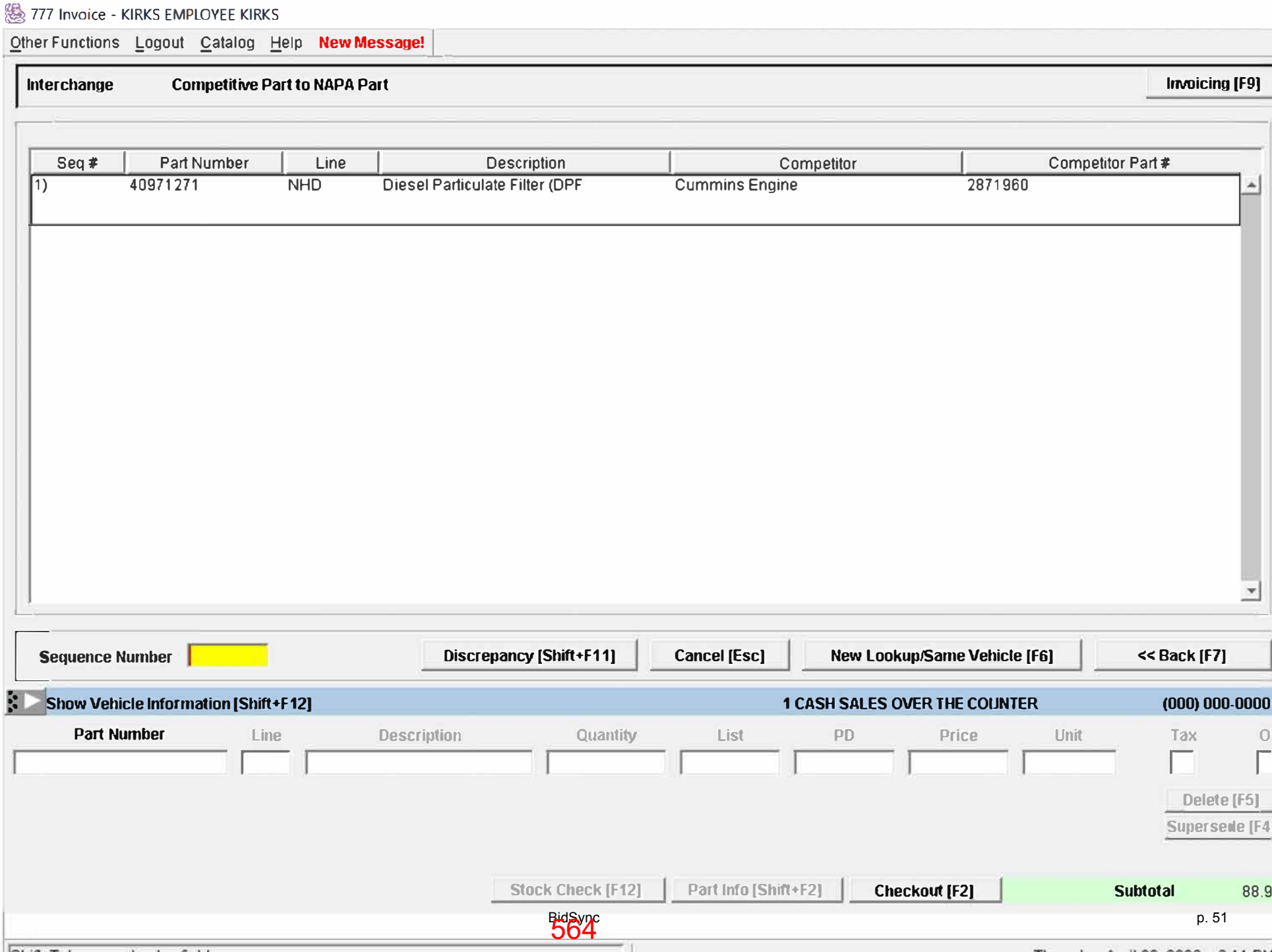
777 Invoice - KIRKS EMPLOYEE KIRKS
Other Functions
Logout
Catalog
Help
New Message!
Interchange
Competitive Part to NAPA Part
Invoicing [F9]
Seq #
Part Number
Line
Description
Competitor
Competitor Part #
1)
40971271
NHD
Diesel Particulate Filter (DPF
Cummins Engine
2871960
Sequence Number
Discrepancy [Shift+F11]
Cancel [Esc]
New Lookup/Same Vehicle [F6]
<< Back [F7]
Show Vehicle Information [Shift+F12]
1 CASH SALES OVER THE COUNTER
(000) 000-0000
Part Number
Line
Description
Quantity
List
PD
Price
Unit
Tax
Delete [F5]
Supersede [F4
Stock Check [F12]
Part Info [Shift+F2]
Checkout [F2]
Subtotal
88.9

NAPA SOLUTIONS LIMITED LIFETIME WARRANTY

At NAPA SOLUTIONS, we take pride in the quality of our products, and your satisfaction with their performance. Thus, NAPA SOLUTIONS warrants its products to be free from defects in material and workmanship under normal use and service. As your exclusive remedy, NAPA SOLUTIONS will replace free of charge any NAPA SOLUTIONS product that, in our reasonable determination, does not comply with the foregoing warranty. This warranty is voided by non-recommended use, improper installation, or physical damage. In addition, NAPA SOLUTIONS will not be liable for any incidental or consequential damages and your exclusive remedy shall be replacement of the product that did not comply with this limited warranty.

ALL OTHER WARRANTIES, EXPRESS OR IMPLIED, INCLUDING WARRANTIES OF FITNESS FOR A PARTICULAR PURPOSE ARE SPECIFICALLY EXCLUDED.

Federal and/or state laws may provide you with other warranties for this product. Some states do not allow the exclusion or limitation of incidental or consequential damages.

Should you need to replace any NAPA SOLUTIONS parts covered under this limited warranty, please see the store of purchase with your used part and original sales receipt.

NDP

Request for Approved Equals
Solicitation 20-13
Cummins Auto Parts Bid

Item Number 20-13-01-04
Champion Number 2894939
Description: OUTLET NOX SENSOR
Approved Equal Part Number:
NAPA NHD73177971

Exception to L. Delivery Schedules - NAPA parts will be delivered in three (3) to four (4) business days.

Requested By:

Kirk's Automotive, Inc.
9330 Roselawn, St.
Detroit, MI 48204
800-321-5989
www.Kirksonline.net

04/30/20 06:48 PM P A R T I M A G E Page 1

Part: 73177971 Line: NHD Desc: NOX SENSOR



Sensor - Right Side View

Features & Benefits
The NOx (Nitrogen Oxide) Sensor is a high-temperature sensor designed to detect NOx levels in diesel-fueled vehicles. Our NOx Sensors are re-engineered for added durability, performance match, and increased efficiency.; Direct replacement for an exact fit, restoring drivability and proper engine functionality; Complete with aluminum housing construction and heat sleeve to protect against both warping and cracking; Anti-seize coating pre-applied to prevent high temperatures from damaging the unit; Rigorous quality inspection and testing has been undertaken to ensures conformance to product standards; The NOx (Nitrogen Oxide) Sensor is a high-temperature sensor designed to detect NOx levels in diesel-fueled vehicles. Our NOx Sensors are re-engineered for added durability, performance match, and increased efficiency.

Attributes
Brand: NAPA
Harness Length: 620 mm
Sub Brand: OE Solutions
UNSPSC: 41113108

04/30/20 06:48 PM P A R T I M A G E Page 2

Part: 73177971 Line: NHD Desc: NOX SENSOR



Part: 73177971 Line: NHD Desc: NOX SENSOR



Sensor - Left View

*** End of Report ***

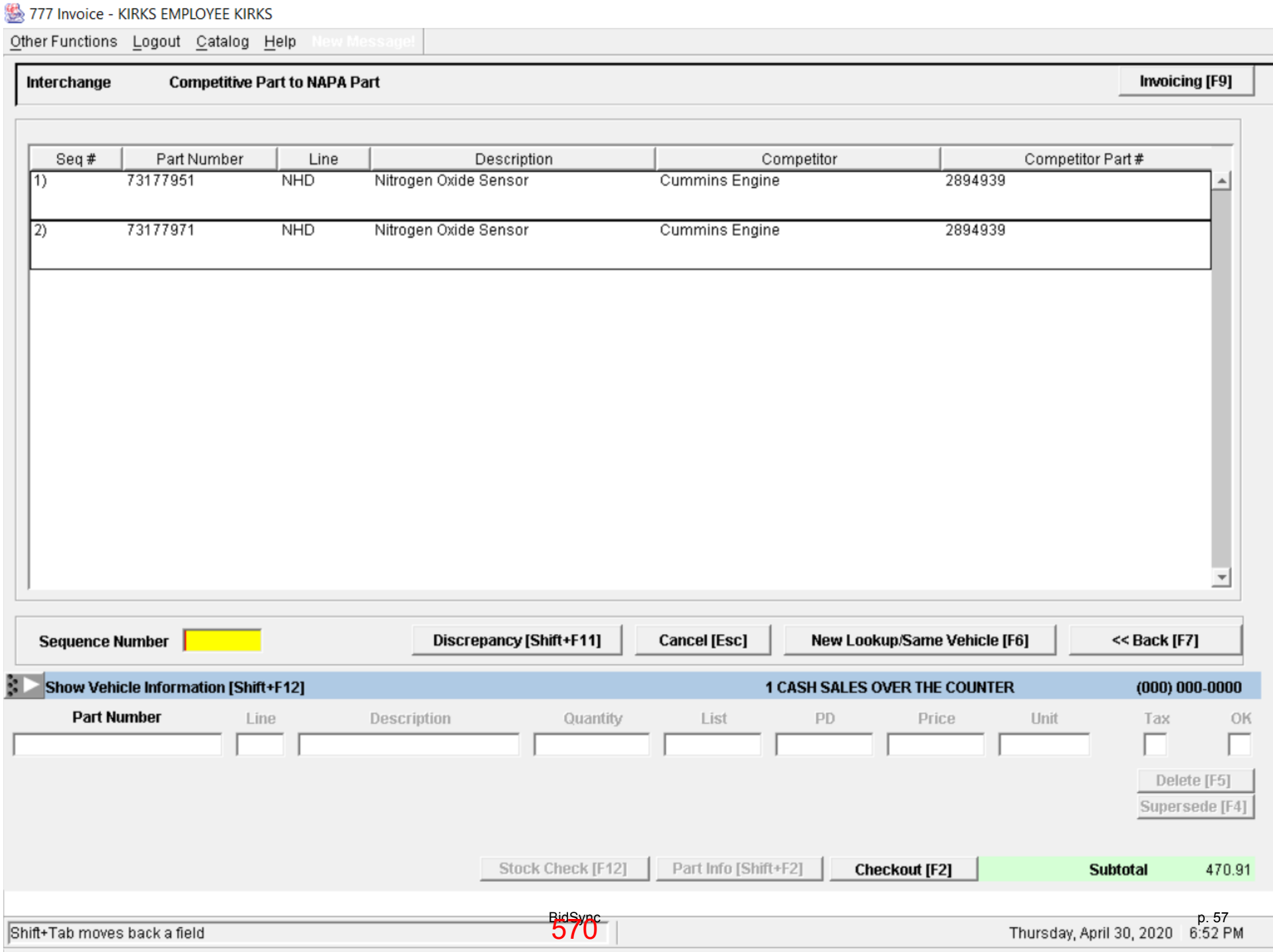
777 Invoice - KIRKS EMPLOYEE KIRKS
Other Functions Logout Catalog Help New Message!
Interchange
Competitive Part to NAPA Part
Invoicing [F9]
Seq # | Part Number | Line | Description | Competitor | Competitor Part #
1) 73177951 NHD Nitrogen Oxide Sensor Cummins Engine 2894939
2) 73177971 NHD Nitrogen Oxide Sensor Cummins Engine 2894939
Sequence Number
Discrepancy [Shift+F11]
Cancel [Esc]
New Lookup/Same Vehicle [F6]
<< Back [F7]
Show Vehicle Information [Shift+F12]
1 CASH SALES OVER THE COUNTER
(000) 000-0000
Part Number Line Description Quantity List PD Price Unit Tax OK
Delete [F5]
Supersede [F4]
Stock Check [F12]
Part Info [Shift+F2]
Checkout [F2]
Subtotal 470.91
Shift+Tab moves back a field
Thursday, April 30, 2020 6:52 PM

Request for Approved Equals
Solicitation 20-13
Cummins Auto Parts Bid

Item Number 20-13-01-15
Champion Number 5293295NX
Description: INLET NOX SENSOR
Approved Equal Part Number:
NAPA NHD73177961

Exception to L. Delivery Schedules - NAPA parts will be delivered in three (3) to four (4) business days.

Requested By:

Kirk's Automotive, Inc.
9330 Roselawn, St.
Detroit, MI 48204
800-321-5989
www.Kirksonline.net

04/30/20 06:59 PM P A R T I M A G E Page 1

Part: 73177961 Line: NHD Desc: NOX SENSOR



Sensor - Right Side View

Features & Benefits
The NOx (Nitrogen Oxide) Sensor is a high-temperature sensor designed to detect NOx levels in diesel-fueled vehicles. Our NOx Sensors are re-engineered for added durability, performance match, and increased efficiency.; Direct replacement for an exact fit, restoring drivability and proper engine functionality; Complete with aluminum housing construction and heat sleeve to protect against both warping and cracking; Anti-seize coating pre-applied to prevent high temperatures from damaging the unit; Rigorous quality inspection and testing has been undertaken to ensures conformance to product standards; The NOx (Nitrogen Oxide) Sensor is a high-temperature sensor designed to detect NOx levels in diesel-fueled vehicles. Our NOx Sensors are re-engineered for added durability, performance match, and increased efficiency.

Attributes
Brand: NAPA
Harness Length: 620 mm
Sub Brand: OE Solutions
UNSPSC: 41113108

04/30/20 06:59 PM P A R T I M A G E Page 2

Part: 73177961 Line: NHD Desc: NOX SENSOR



Part: 73177961 Line: NHD Desc: NOX SENSOR



Sensor - Left View

*** End of Report ***

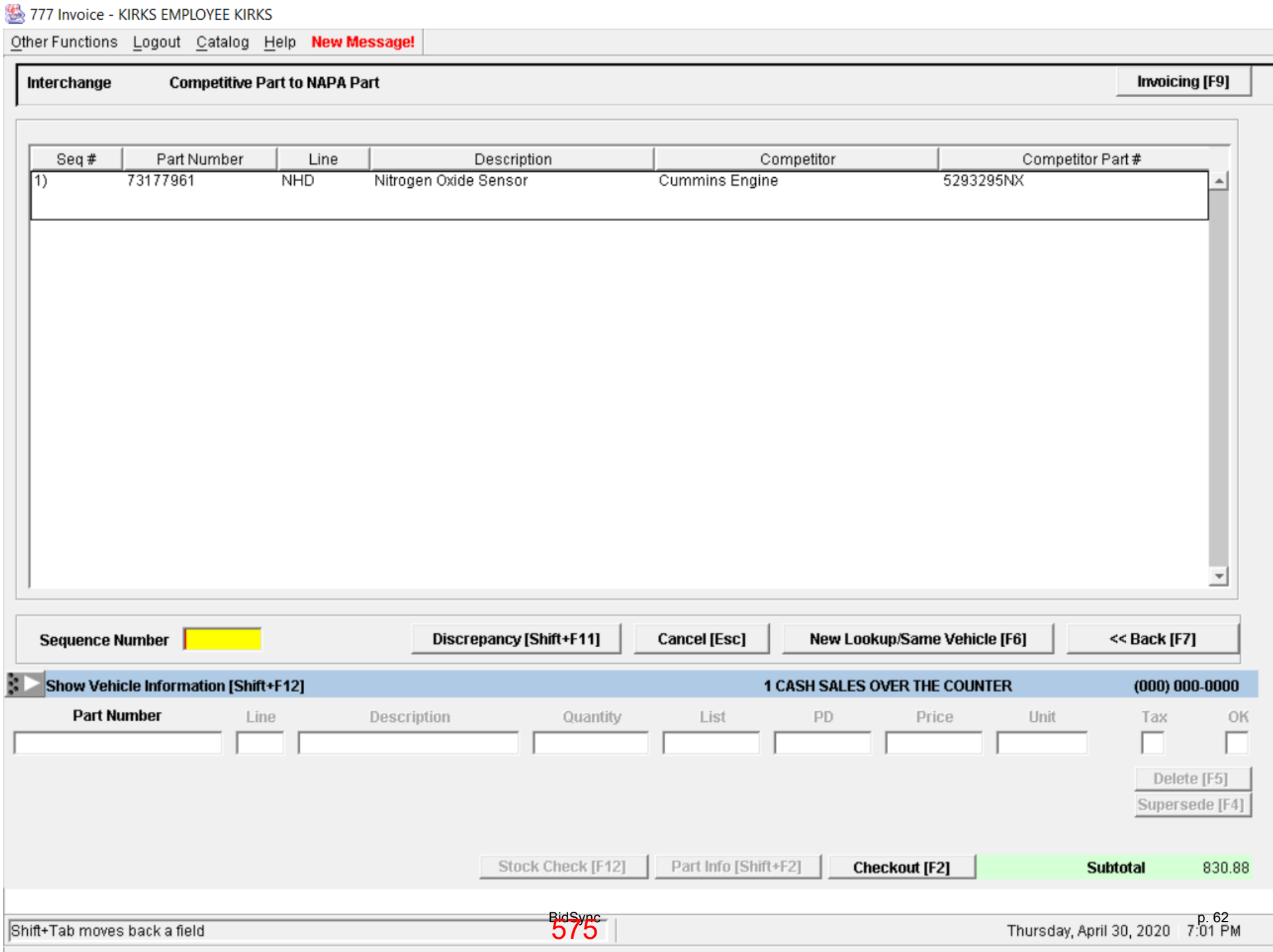
777 Invoice - KIRKS EMPLOYEE KIRKS
Other Functions Logout Catalog Help New Message!
Interchange
Competitive Part to NAPA Part
Invoicing [F9]
Seq # | Part Number | Line | Description | Competitor | Competitor Part #
1) | 73177961 | NHD | Nitrogen Oxide Sensor | Cummins Engine | 5293295NX
Sequence Number
Discrepancy [Shift+F11]
Cancel [Esc]
New Lookup/Same Vehicle [F6]
<< Back [F7]
Show Vehicle Information [Shift+F12]
1 CASH SALES OVER THE COUNTER
(000) 000-0000
Part Number | Line | Description | Quantity | List | PD | Price | Unit | Tax | OK
Delete [F5]
Supersede [F4]
Stock Check [F12]
Part Info [Shift+F2]
Checkout [F2]
Subtotal 830.88
Shift+Tab moves back a field
Thursday, April 30, 2020 7:01 PM

Kirk's Automotive Inc.

Item: **GASKET PARTICULATE GILLIG 1100**

Attachments

Request For Approved Equals ENVIRO GASKETS.pdf

April 30 / 2020
Solicitation 20-13
Cummins Auto Parts Bid
Item Number: 20-13-01-38
BAR? N_pr L s k `cpq8 0644414
BCQAPGNRGML8 E?QICR ?DK BCTGAC
Kirk's Part Number: 1057

Grc k L s k `cp8 0.+/1+./+.1
BAR? N_pr L s k `cpq8 066.0/3
Bcqapgnrgml8 GASKET PARTICULATE GILLIG
Kirk's Part Number: 1056

Item Number: 20-13-01-01
DCTA Part Numbers: 2871452
Description: GASKET PARTICULATE FILTER
Kirk's Part Number: 1052

Exception to L. Delivery Schedules - NAPA parts will be delivered in three (3) to four (4) business days.

Kirk's Automotive, inc
9330 Roselawn
Detroit, MI 48204
313-933-7030

DPF Gasket Specs						
Part Number	OEM Number	Dimensions	Make	Model	Clamp Cross	Type
ENV-G-1057	2866636 / Q312526 / 3846392C1 / 21021846	4" ID x 4.75" OD	Cummins - Volvo/Mack - Paccar	ISB/ISC/ISL - PX6/PX8	ENV-CL-1057	
ENV-G-1056	2880215 / A029E744 / A4709971245 / 1827320	4.88" ID x 6.25" OD	Cummins - Volvo/Mack		ENV-CL-1056	
ENV-G-1052	2871452	11.02" ID x 11.81" OD	Cummins - Paccar	ISC/ISL - PX8		

Kirk's Automotive Inc.

Item: **OUTLET NOX SENSOR CHAMPION & EZ RIDER**

Attachments

Request For Approved Equals NAPA.pdf

Request for Approved Equals
Solicitation 20-13
Cummins Auto Parts Bid

Item Number 20-13-01-02
Gillig Number 2871960
Description: SENSOR PRESSURE DIFF EXH
Approved Equal Part Number:
NAPA NHD40971271

Exception to L. Delivery Schedules - NAPA parts will be delivered in three (3) to four (4) business days.

Requested By:

Kirk's Automotive, Inc.
9330 Roselawn, St.
Detroit, MI 48204
800-321-5989
www.Kirksonline.net

04/30/20 06:03 PM P A R T I M A G E Page 1

Part: 40971271 Line: NHD Desc: DPF PRESSURE SENSOR



Sensor - Back View

Features & Benefits
The Diesel Particulate Filter (DPF) Pressure Sensor measures exhaust pressure, indicating if the Diesel Particulate Filter is clogged. Replacement is essential for better overall drivability and lessens the chance of reduced engine power.; Direct replacement for a proper fit every time; Constructed of copper, rubber and plastic for performance and durability; Easy to install - no special tools required during installation; This part has undergone vehicle try-on testing to meet product standards and quality; The Diesel Particulate Filter (DPF) Pressure Sensor measures exhaust pressure, indicating if the Diesel Particulate Filter is clogged. Replacement is essential for better overall drivability and lessens the chance of reduced engine power.

Attributes
Brand: NAPA
Package Contents: 1 DPF Pressure Sensor
Sub Brand: OE Solutions
UNSPSC: 41111927

04/30/20 06:03 PM P A R T I M A G E Page 2

Part: 40971271 Line: NHD Desc: DPF PRESSURE SENSOR



Part: 40971271 Line: NHD Desc: DPF PRESSURE SENSOR



Sensor - Front View

*** End of Report ***

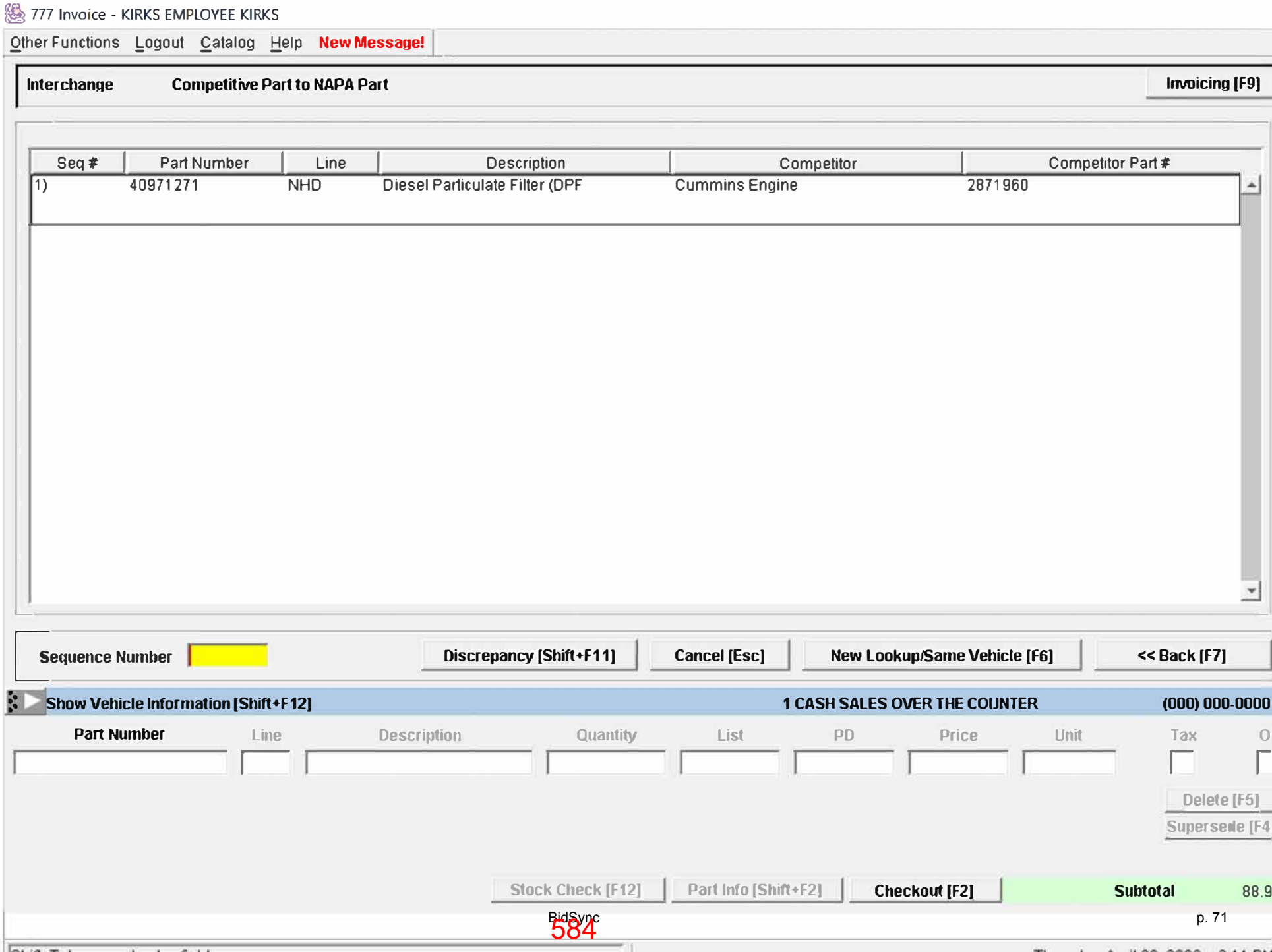
777 Invoice - KIRKS EMPLOYEE KIRKS
Other Functions Logout Catalog Help New Message!
Interchange
Competitive Part to NAPA Part
Invoicing [F9]
Seq # Part Number Line Description Competitor Competitor Part #
1) 40971271 NHD Diesel Particulate Filter (DPF Cummins Engine 2871960
Sequence Number
Discrepancy [Shift+F11]
Cancel [Esc]
New Lookup/Same Vehicle [F6]
<< Back [F7]
Show Vehicle Information [Shift+F12]
1 CASH SALES OVER THE COUNTER
(000) 000-0000
Part Number Line Description Quantity List PD Price Unit Tax
Delete [F5]
Supersede [F4
Stock Check [F12]
Part Info [Shift+F2]
Checkout [F2]
Subtotal 88.9

NAPA SOLUTIONS LIMITED LIFETIME WARRANTY

At NAPA SOLUTIONS, we take pride in the quality of our products, and your satisfaction with their performance. Thus, NAPA SOLUTIONS warrants its products to be free from defects in material and workmanship under normal use and service. As your exclusive remedy, NAPA SOLUTIONS will replace free of charge any NAPA SOLUTIONS product that, in our reasonable determination, does not comply with the foregoing warranty. This warranty is voided by non-recommended use, improper installation, or physical damage. In addition, NAPA SOLUTIONS will not be liable for any incidental or consequential damages and your exclusive remedy shall be replacement of the product that did not comply with this limited warranty.

ALL OTHER WARRANTIES, EXPRESS OR IMPLIED, INCLUDING WARRANTIES OF FITNESS FOR A PARTICULAR PURPOSE ARE SPECIFICALLY EXCLUDED.

Federal and/or state laws may provide you with other warranties for this product. Some states do not allow the exclusion or limitation of incidental or consequential damages.

Should you need to replace any NAPA SOLUTIONS parts covered under this limited warranty, please see the store of purchase with your used part and original sales receipt.

NDP

Request for Approved Equals
Solicitation 20-13
Cummins Auto Parts Bid

Item Number 20-13-01-04
Champion Number 2894939
Description: OUTLET NOX SENSOR
Approved Equal Part Number:
NAPA NHD73177971

Exception to L. Delivery Schedules - NAPA parts will be delivered in three (3) to four (4) business days.

Requested By:

Kirk's Automotive, Inc.
9330 Roselawn, St.
Detroit, MI 48204
800-321-5989
www.Kirksonline.net

04/30/20 06:48 PM P A R T I M A G E Page 1

Part: 73177971 Line: NHD Desc: NOX SENSOR



Sensor - Right Side View

Features & Benefits
The NOx (Nitrogen Oxide) Sensor is a high-temperature sensor designed to detect NOx levels in diesel-fueled vehicles. Our NOx Sensors are re-engineered for added durability, performance match, and increased efficiency.; Direct replacement for an exact fit, restoring drivability and proper engine functionality; Complete with aluminum housing construction and heat sleeve to protect against both warping and cracking; Anti-seize coating pre-applied to prevent high temperatures from damaging the unit; Rigorous quality inspection and testing has been undertaken to ensures conformance to product standards; The NOx (Nitrogen Oxide) Sensor is a high-temperature sensor designed to detect NOx levels in diesel-fueled vehicles. Our NOx Sensors are re-engineered for added durability, performance match, and increased efficiency.

Attributes
Brand: NAPA
Harness Length: 620 mm
Sub Brand: OE Solutions
UNSPSC: 41113108

04/30/20 06:48 PM P A R T I M A G E Page 2

Part: 73177971 Line: NHD Desc: NOX SENSOR



Part: 73177971 Line: NHD Desc: NOX SENSOR



Sensor - Left View

*** End of Report ***

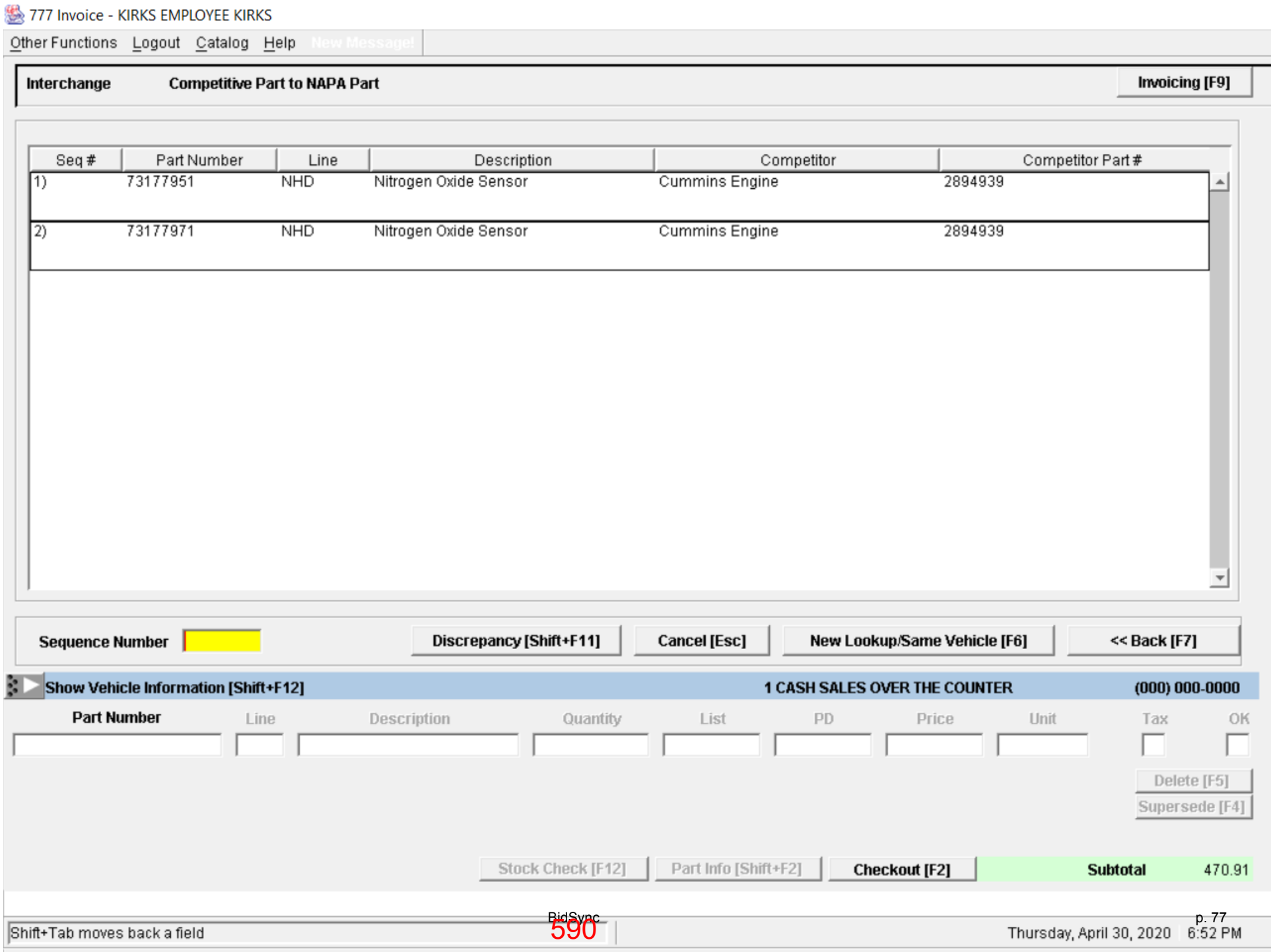
777 Invoice - KIRKS EMPLOYEE KIRKS
Other Functions Logout Catalog Help New Message!
Interchange
Competitive Part to NAPA Part
Invoicing [F9]
Seq # | Part Number | Line | Description | Competitor | Competitor Part #
1) 73177951 NHD Nitrogen Oxide Sensor Cummins Engine 2894939
2) 73177971 NHD Nitrogen Oxide Sensor Cummins Engine 2894939
Sequence Number
Discrepancy [Shift+F11]
Cancel [Esc]
New Lookup/Same Vehicle [F6]
<< Back [F7]
Show Vehicle Information [Shift+F12]
1 CASH SALES OVER THE COUNTER
(000) 000-0000
Part Number | Line | Description | Quantity | List | PD | Price | Unit | Tax | OK
Delete [F5]
Supersede [F4]
Stock Check [F12]
Part Info [Shift+F2]
Checkout [F2]
Subtotal 470.91
Shift+Tab moves back a field
Thursday, April 30, 2020 6:52 PM

Request for Approved Equals
Solicitation 20-13
Cummins Auto Parts Bid

Item Number 20-13-01-15
Champion Number 5293295NX
Description: INLET NOX SENSOR
Approved Equal Part Number:
NAPA NHD73177961

Exception to L. Delivery Schedules - NAPA parts will be delivered in three (3) to four (4) business days.

Requested By:

Kirk's Automotive, Inc.
9330 Roselawn, St.
Detroit, MI 48204
800-321-5989
www.Kirksonline.net

04/30/20 06:59 PM P A R T I M A G E Page 1

Part: 73177961 Line: NHD Desc: NOX SENSOR



Sensor - Right Side View

Features & Benefits
The NOx (Nitrogen Oxide) Sensor is a high-temperature sensor designed to detect NOx levels in diesel-fueled vehicles. Our NOx Sensors are re-engineered for added durability, performance match, and increased efficiency.; Direct replacement for an exact fit, restoring drivability and proper engine functionality; Complete with aluminum housing construction and heat sleeve to protect against both warping and cracking; Anti-seize coating pre-applied to prevent high temperatures from damaging the unit; Rigorous quality inspection and testing has been undertaken to ensures conformance to product standards; The NOx (Nitrogen Oxide) Sensor is a high-temperature sensor designed to detect NOx levels in diesel-fueled vehicles. Our NOx Sensors are re-engineered for added durability, performance match, and increased efficiency.

Attributes
Brand: NAPA
Harness Length: 620 mm
Sub Brand: OE Solutions
UNSPSC: 41113108

04/30/20 06:59 PM P A R T I M A G E Page 2

Part: 73177961 Line: NHD Desc: NOX SENSOR



Part: 73177961 Line: NHD Desc: NOX SENSOR



Sensor - Left View

*** End of Report ***


777 Invoice - KIRKS EMPLOYEE KIRKS
Other Functions Logout Catalog Help New Message!
Interchange
Competitive Part to NAPA Part
Invoicing [F9]
Seq # | Part Number | Line | Description | Competitor | Competitor Part #
1) | 73177961 | NHD | Nitrogen Oxide Sensor | Cummins Engine | 5293295NX
Sequence Number
Discrepancy [Shift+F11]
Cancel [Esc]
New Lookup/Same Vehicle [F6]
<< Back [F7]
Show Vehicle Information [Shift+F12]
1 CASH SALES OVER THE COUNTER
(000) 000-0000
Part Number | Line | Description | Quantity | List | PD | Price | Unit | Tax | OK
Delete [F5]
Supersede [F4]
Stock Check [F12]
Part Info [Shift+F2]
Checkout [F2]
Subtotal 830.88
Shift+Tab moves back a field
Thursday, April 30, 2020 7:01 PM

Kirk's Automotive Inc.

Item: **GASKET AIR COMP MOUNTING NEW CHAMP**

Attachments

Request For Approved Equals ISM.pdf

Request for Approved Equals
Solicitation 20-13
Cummins Auto Parts Bid

Item Number 20-13-01-09
Champion Number 4896897
Description: GASKET AIR COMP
Approved Equal Part Number: ISM M-4896797

Item Number 20-13-01-10
Gillig Number 4932615
Description: GASKET EGR TUBE
Approved Equal Part Number: ISM M-4932615

Item Number 20-13-01-35
Gillig Number 3930408
Description: GASKET OIL PAN
Approved Equal Part Number: ISM M-3930408

Exception to L. Delivery Schedules - NAPA parts will be delivered in three (3) to four (4) business days.

Requested By:
Kirk's Automotive, Inc.
9330 Roselawn, St.
Detroit, MI 48204
800-321-5989

Interstate McBee Company History

Interstate Diesel Service, founded in 1947, specialized in remanufacturing Detroit Diesel® fuel injectors. In the 1950's the company expanded into manufacturing a variety of fuel injection components, in collaboration with a number of Original Equipment Manufacturers (OEMs) such as Diamond Rio®, GMC Truck & Coach®, International Harvester®, White Motors®, Allis-Chalmers® and others. During this time, Interstate Diesel gained the reputation as one of the world's premier remanufacturers for fuel injection components.

In the 1970's McBee Supply was established to service the heavy duty engine aftermarket with replacement components for Cummins engine applications. In the 1980's McBee Supply expanded coverage to include replacement parts for Caterpillar®, Detroit Diesel® and Navistar® engine applications.

Since the 1990's, Interstate Diesel designed, patented and marketed a variety of revolutionary fuel injection components. "ECOTIP" technology for EMD engine applications is an example of one of these components. This technology dramatically reduces exhaust particulates and significantly improves fuel economy for rail, marine, power and industrial applications. In 1997, Interstate Diesel added Electro-Motive Diesel® to the list of OEM's serviced.

In 1999 Interstate-McBee invested in equipment and personnel to manufacture our own brand of engine gaskets and gasket kits. Today we manufacture over 2700 individual gaskets and assemble more than 3,000 gasket kits for Caterpillar®, Cummins®, Detroit Diesel®, and Navistar® engine applications.

In 2008, with the rapid expansion of the business, McBee Supply moved into an independent , dedicated distribution facility in Cleveland. With more space at the manufacturing facility Interstate-McBee created two engine test cells to validate new products prior to launch. These test cells allow testing of engines up to 2,000HP.

ISO/Quality

Interstate-McBee maintains a Quality Management System that conforms to the ISO 9001:2015 with Design Standard. This is achieved by maintaining a Quality Management System at all locations that conforms to the ISO 9001:2015 with Design Standard. See Attached Certificate.

Attached is Interstate Mc-Bee's Warranty Policy

We look forward to UTA's approval of the proposed equal products, and please contact Mr. Robert Bruhn with any questions or requests for additional information.

SMITHERS
QUALITY ASSESSMENTS

CERTIFICATE OF APPROVAL

This is to Certify that the Quality Management System of:

Interstate Diesel-McBee

4901 Lakeside Avenue
Cleveland, OH 44114
(Page 1 of 2; see Appendix)

has been assessed and approved by Smithers Quality Assessments, Inc., to the following quality management system standards and requirements:

ISO 9001:2015 with Design

The Quality Management System is Applicable to:

The design and manufacturing and remanufacturing and distribution of diesel fuel system components for diesel engine parts.

Approval
Certificate Number: 98.085

Original Approval: March 26, 1998

Current Certificate: March 15, 2019

Certificate Expires: March 14, 2022

The use of the accreditation mark indicates accreditation in respect of those activities covered by the above certificate number.

on behalf of SQA - J. Michael Hochschwender, CEO

The approval is subject to the company maintaining its system to the required standards which will be monitored by Smithers Quality Assessments, Inc., 121 S. Main St. Suite 300, Akron, Ohio 44308, USA

ANAB ACCREDITED ISO/IEC 17021 MANAGEMENT SYSTEMS CERTIFICATION BODY

Form SQA-13.1c.2015| ISO Appendix | Revised: 12/01/15 | (4035-Q-298) – Single Site, Current Certificate Revision Date: 02/08/2019

APPENDIX A
TO THE CERTIFICATE
OF REGISTRATION NO. 98.085

SMITHERS QUALITY ASSESSMENTS, INC.

Site:

Interstate Diesel-McBee
4901 Lakeside Avenue
Cleveland, OH 44114
Scope of services provided by this location: Design, manufacturing, remanufacturing, and distribution.

Support Location:

Interstate Diesel-McBee
5300 Lakeside Avenue
Cleveland, OH 44114
Scope of services provided by this location: Sales, purchasing, limited manufacturing, inbound, outbound, picnpac, kitting.

Interstate Diesel-McBee
13137 Arctic Circle
Santa Fe Springs, CA 90670

Interstate Diesel-McBee
9955 NW 58th Street
Doral, FL 33178

Interstate Diesel-McBee
1755 Transcentral Court #200
Houston, TX 77032

Scope of services provided by these locations: Customer service and distribution.

Applicable Standard: ISO 9001:2015 with Design

This appendix applies only to those sites listed above. As other sites are assessed and approved, or as sites already approved are removed from active services, this appendix will be amended to show the current status. Sites not listed on this appendix shall not be viewed as approved.

ANAB ACCREDITED ISO/IEC 17021 MANAGEMENT SYSTEMS CERTIFICATION BODY

INTERSTATE-McBEE Interstate Diesel Service Inc. McBee Supply Corp.	Title McBee Extended Warranty - Engine Parts	
INSTRUCTION	Q-INT-82-0159	H	Page 1 of 2

COVERAGE

Diesel Engine
New engine parts furnished by Interstate-McBee are warranted to be free from defects in material and workmanship under normal use and service for a period of twenty-four (24) months from the date of installation, without mileage or hour limitation. This warranty applies to all owners in the chain of distribution, i.e. distributor, dealer, original owner, until the end of the respective periods of coverage and shall not apply to subsequent owners.

Natural Gas or Methane Engine and Prime Power Generation
New engine parts furnished by Interstate-McBee are warranted to be free from defects in material and workmanship under normal use and service, for a period of twenty four (24) months from the date of installation with the exception of valve train components which are warranted for twelve (12) months from the date of installation.. This warranty applies to all owners in the chain of distribution, i.e. distributor, dealer, original owner, until the end of the respective periods of coverage and shall not apply to subsequent owners.

INTERSTATE-MCBEE RESPONSIBILITIES
Interstate-McBee will pay only for parts, labor and fluids needed to repair damages directly resulting from an above defined warranty failure to the functional condition existing immediately prior to the failure, including progressive damage to the engine in which the warrantable part was installed, provided Interstate-McBee's inspection of said failed part or parts discloses to our satisfaction to have been defective. Labor cost will be paid but not to exceed published flat rates times at Interstate-McBee's standard hourly rate. No overtime or holiday rates will be allowed. Only new or rebuilt Interstate-McBee or Interstate-McBee approved parts will be used in making the repair.

OWNER'S RESPONSIBILITIES
Owner is responsible for the operation and maintenance of the engine as specified in the APPLICABLE O.E.M. OPERATION AND MAINTENANCE MANUALS. Owner must give notice within (30) days of any suspected failure and before expiration of applicable warranty to be considered warrantable. Owner will provide alleged defective and associated parts for examination by Interstate-McBee and, if requested, return same F.O.B. Cleveland, Ohio. Additionally, a complete Electronic Control Module report must accompany the claim. Interstate-McBee further reserves the right to examine any engine subject to a claim under this warranty. Approved warranty work is to be performed by an authorized Interstate-McBee Distributor or Dealer or other Interstate-McBee approved facility. Copies of all work orders and invoices for repairs to the engine must accompany the claim. Owner is responsible for all costs, including, but not limited to, repairs made to items other than the engine in which the parts are installed, "downtime" expenses and all business costs and losses resulting from a warrantable failure. ALL CLAIMS MUST BE FILED ONLINE AT WWW.INTERSTATE-MCBEE.COM

WARRANTY LIMITATIONS
Interstate-McBee is not responsible for failure resulting from owner or operator abuse or neglect, such as, but not limited to: operation without adequate coolant, fuel or lubricants; over fueling; over speeding; lack of maintenance of lubricating, coolant or air intake systems; improper storage, starting, warm-up, run-in or shut down practices. Interstate-McBee is not responsible for failures resulting from improper repair or installation, for parts that have been altered or for parts not approved by Interstate-McBee. This warranty does not apply to parts furnished on a no charge basis. Interstate-McBee does not warrant parts supplied by Interstate-McBee which bear the name and trademark of another company. These parts are warranted by their manufacturers and not Interstate-McBee.. In no event shall this warranty extend beyond (36) months from the date of sale. THERE ARE NO WARRANTIES EXPRESSED, IMPLIED OR STATUTORY, FOR THE PARTS NAMED HEREIN BEFORE, MADE BY INTERSTATE-MCBEE OTHER THAN SET FORTH HEREIN. We neither assume nor authorize any other persons to assume for us any other liability in connection with our products. INTERSTATE-MCBEE SHALL NOT BE RESPONSIBLE FOR ANY OTHER CONSEQUENTIAL DAMAGES OR CONTINGENT LIABILITIES. Further, in no event shall Intestate-McBee bear any responsibility for any damages, which exceed the then available aggregate coverage provided under the terms and conditions of its product liability policy.

This warranty shall be interpreted, governed and enforced in accordance with the laws of the State of Ohio, U.S.A. (For products not covered herein, see Interstate-McBee's General Product Warranty.) Any actions or proceedings relating to this warranty must be filed or commenced within three (3) months of the alleged breach. If any of these warranty provisions or portions thereof prohibited by law or by any court of competent jurisdiction, in any locality, its invalidity or unenforceability shall not affect the validity or enforceability of any other warranty provisions or portions thereof.

Kirk's Automotive Inc.

Item: **GASKET EGR AIR TUBE 700 GILLIG**

Attachments

Request For Approved Equals ISM.pdf

Request for Approved Equals
Solicitation 20-13
Cummins Auto Parts Bid

Item Number 20-13-01-09
Champion Number 4896897
Description: GASKET AIR COMP
Approved Equal Part Number: ISM M-4896797

Item Number 20-13-01-10
Gillig Number 4932615
Description: GASKET EGR TUBE
Approved Equal Part Number: ISM M-4932615

Item Number 20-13-01-35
Gillig Number 3930408
Description: GASKET OIL PAN
Approved Equal Part Number: ISM M-3930408

Exception to L. Delivery Schedules - NAPA parts will be delivered in three (3) to four (4) business days.

Requested By:
Kirk's Automotive, Inc.
9330 Roselawn, St.
Detroit, MI 48204
800-321-5989

www.KirksOnline.net
693

Interstate McBee Company History

Interstate Diesel Service, founded in 1947, specialized in remanufacturing Detroit Diesel® fuel injectors. In the 1950's the company expanded into manufacturing a variety of fuel injection components, in collaboration with a number of Original Equipment Manufacturers (OEMs) such as Diamond Rio®, GMC Truck & Coach®, International Harvester®, White Motors®, Allis-Chalmers® and others. During this time, Interstate Diesel gained the reputation as one of the world's premier remanufacturers for fuel injection components.

In the 1970's McBee Supply was established to service the heavy duty engine aftermarket with replacement components for Cummins engine applications. In the 1980's McBee Supply expanded coverage to include replacement parts for Caterpillar®, Detroit Diesel® and Navistar® engine applications.

Since the 1990's, Interstate Diesel designed, patented and marketed a variety of revolutionary fuel injection components. "ECOTIP" technology for EMD engine applications is an example of one of these components. This technology dramatically reduces exhaust particulates and significantly improves fuel economy for rail, marine, power and industrial applications. In 1997, Interstate Diesel added Electro-Motive Diesel® to the list of OEM's serviced.

In 1999 Interstate-McBee invested in equipment and personnel to manufacture our own brand of engine gaskets and gasket kits. Today we manufacture over 2700 individual gaskets and assemble more than 3,000 gasket kits for Caterpillar®, Cummins®, Detroit Diesel®, and Navistar® engine applications.

In 2008, with the rapid expansion of the business, McBee Supply moved into an independent , dedicated distribution facility in Cleveland. With more space at the manufacturing facility Interstate-McBee created two engine test cells to validate new products prior to launch. These test cells allow testing of engines up to 2,000HP.

ISO/Quality

Interstate-McBee maintains a Quality Management System that conforms to the ISO 9001:2015 with Design Standard. This is achieved by maintaining a Quality Management System at all locations that conforms to the ISO 9001:2015 with Design Standard. See Attached Certificate.

Attached is Interstate Mc-Bee's Warranty Policy

We look forward to UTA's approval of the proposed equal products, and please contact Mr. Robert Bruhn with any questions or requests for additional information.

SMITHERS
QUALITY ASSESSMENTS

CERTIFICATE OF APPROVAL

This is to Certify that the Quality Management System of:

Interstate Diesel-McBee

4901 Lakeside Avenue
Cleveland, OH 44114

(Page 1 of 2; see Appendix)

has been assessed and approved by Smithers Quality Assessments, Inc., to the following quality management system standards and requirements:

ISO 9001:2015 with Design

The Quality Management System is Applicable to:

The design and manufacturing and remanufacturing and distribution of diesel fuel system components for diesel engine parts.

Approval
Certificate Number: 98.085

Original Approval: March 26, 1998

Current Certificate: March 15, 2019

Certificate Expires: March 14, 2022

The use of the accreditation mark indicates accreditation in respect of those activities covered by the above certificate number.

on behalf of SQA - J. Michael Hochschwender, CEO

The approval is subject to the company maintaining its system to the required standards which will be monitored by Smithers Quality Assessments, Inc., 121 S. Main St. Suite 300, Akron, Ohio 44308, USA

ANAB ACCREDITED ISO/IEC 17021 MANAGEMENT SYSTEMS CERTIFICATION BODY

Form SQA-13.1c.2015| ISO Appendix | Revised: 12/01/15 | (4035-Q-298) – Single Site, Current Certificate Revision Date: 02/08/2019

APPENDIX A
TO THE CERTIFICATE
OF REGISTRATION NO. 98.085

SMITHERS QUALITY ASSESSMENTS, INC.

Site:

Interstate Diesel-McBee
4901 Lakeside Avenue
Cleveland, OH 44114
Scope of services provided by this location: Design, manufacturing, remanufacturing, and distribution.

Support Location:

Interstate Diesel-McBee
5300 Lakeside Avenue
Cleveland, OH 44114
Scope of services provided by this location: Sales, purchasing, limited manufacturing, inbound, outbound, picnpac, kitting.

Interstate Diesel-McBee
13137 Arctic Circle
Santa Fe Springs, CA 90670

Interstate Diesel-McBee
9955 NW 58th Street
Doral, FL 33178

Interstate Diesel-McBee
1755 Transcentral Court #200
Houston, TX 77032

Scope of services provided by these locations: Customer service and distribution.

Applicable Standard: ISO 9001:2015 with Design

This appendix applies only to those sites listed above. As other sites are assessed and approved, or as sites already approved are removed from active services, this appendix will be amended to show the current status. Sites not listed on this appendix shall not be viewed as approved.

ANAB ACCREDITED ISO/IEC 17021 MANAGEMENT SYSTEMS CERTIFICATION BODY

INTERSTATE-McBEE Interstate Diesel Service Inc. McBee Supply Corp.	Title McBee Extended Warranty - Engine Parts	
INSTRUCTION	Q-INT-82-0159	H	Page 1 of 2

COVERAGE

Diesel Engine
New engine parts furnished by Interstate-McBee are warranted to be free from defects in material and workmanship under normal use and service for a period of twenty-four (24) months from the date of installation, without mileage or hour limitation. This warranty applies to all owners in the chain of distribution, i.e. distributor, dealer, original owner, until the end of the respective periods of coverage and shall not apply to subsequent owners.

Natural Gas or Methane Engine and Prime Power Generation
New engine parts furnished by Interstate-McBee are warranted to be free from defects in material and workmanship under normal use and service, for a period of twenty four (24) months from the date of installation with the exception of valve train components which are warranted for twelve (12) months from the date of installation.. This warranty applies to all owners in the chain of distribution, i.e. distributor, dealer, original owner, until the end of the respective periods of coverage and shall not apply to subsequent owners.

INTERSTATE-MCBEE RESPONSIBILITIES
Interstate-McBee will pay only for parts, labor and fluids needed to repair damages directly resulting from an above defined warranty failure to the functional condition existing immediately prior to the failure, including progressive damage to the engine in which the warrantable part was installed, provided Interstate-McBee's inspection of said failed part or parts discloses to our satisfaction to have been defective. Labor cost will be paid but not to exceed published flat rates times at Interstate-McBee's standard hourly rate. No overtime or holiday rates will be allowed. Only new or rebuilt Interstate-McBee or Interstate-McBee approved parts will be used in making the repair.

OWNER'S RESPONSIBILITIES
Owner is responsible for the operation and maintenance of the engine as specified in the APPLICABLE O.E.M. OPERATION AND MAINTENANCE MANUALS. Owner must give notice within (30) days of any suspected failure and before expiration of applicable warranty to be considered warrantable. Owner will provide alleged defective and associated parts for examination by Interstate-McBee and, if requested, return same F.O.B. Cleveland, Ohio. Additionally, a complete Electronic Control Module report must accompany the claim. Interstate-McBee further reserves the right to examine any engine subject to a claim under this warranty. Approved warranty work is to be performed by an authorized Interstate-McBee Distributor or Dealer or other Interstate-McBee approved facility. Copies of all work orders and invoices for repairs to the engine must accompany the claim. Owner is responsible for all costs, including, but not limited to, repairs made to items other than the engine in which the parts are installed, "downtime" expenses and all business costs and losses resulting from a warrantable failure. ALL CLAIMS MUST BE FILED ONLINE AT WWW.INTERSTATE-MCBEE.COM

WARRANTY LIMITATIONS
Interstate-McBee is not responsible for failure resulting from owner or operator abuse or neglect, such as, but not limited to: operation without adequate coolant, fuel or lubricants; over fueling; over speeding; lack of maintenance of lubricating, coolant or air intake systems; improper storage, starting, warm-up, run-in or shut down practices. Interstate-McBee is not responsible for failures resulting from improper repair or installation, for parts that have been altered or for parts not approved by Interstate-McBee. This warranty does not apply to parts furnished on a no charge basis. Interstate-McBee does not warrant parts supplied by Interstate-McBee which bear the name and trademark of another company. These parts are warranted by their manufacturers and not Interstate-McBee.. In no event shall this warranty extend beyond (36) months from the date of sale. THERE ARE NO WARRANTIES EXPRESSED, IMPLIED OR STATUTORY, FOR THE PARTS NAMED HEREIN BEFORE, MADE BY INTERSTATE-MCBEE OTHER THAN SET FORTH HEREIN. We neither assume nor authorize any other persons to assume for us any other liability in connection with our products. INTERSTATE-MCBEE SHALL NOT BE RESPONSIBLE FOR ANY OTHER CONSEQUENTIAL DAMAGES OR CONTINGENT LIABILITIES. Further, in no event shall Intestate-McBee bear any responsibility for any damages, which exceed the then available aggregate coverage provided under the terms and conditions of its product liability policy.

This warranty shall be interpreted, governed and enforced in accordance with the laws of the State of Ohio, U.S.A. (For products not covered herein, see Interstate-McBee's General Product Warranty.) Any actions or proceedings relating to this warranty must be filed or commenced within three (3) months of the alleged breach. If any of these warranty provisions or portions thereof prohibited by law or by any court of competent jurisdiction, in any locality, its invalidity or unenforceability shall not affect the validity or enforceability of any other warranty provisions or portions thereof.

Kirk's Automotive Inc.

Item: **DOSER VALVE DEF INJ NEWCHAMP EASY RIDER**

Attachments

Request For Approved Equals BOSCH.pdf

Request for Approved Equals
Solicitation 20-13
Cummins Auto Parts Bid

Item Number 20-13-01-12

EZ Rider Number 2871878NX

Description: DOSER VALVE DEF INJ

Approved Equal Part Number: BOSCH 444043008

Item Number 20-13-01-14

Champion Number 4387304RX

Description: DEF DOSING UNIT PUMP

Approved Equal Part Number: BOSCH 444042132

Exception to L. Delivery Schedules - BOSCH parts will be delivered in three (3) to four (4) business days.

Requested By:

Kirk's Automotive, Inc.
9330 Roselawn, St.
Detroit, MI 48204
800-321-5989
www.Kirksonline.net

Denoxtronic 2.2 – SCR System for Heavy Commercial and Off-Highway Vehicles

BOSCH
Invented for life



In order to reduce the environmental burden of toxic substances emitted by motor vehicles, in 2010 the Environmental Protection Agency (EPA) mandated that the worldwide limits for emissions from motor vehicles be continuously reduced.

The Bosch Denoxtronic System is the leading OEM emissions solution utilizing Selective Catalytic Reduction (SCR) technology. SCR technology is an Exhaust Gas Treatment strategy designed to reduce oxides of nitrogen (NOx) emissions from diesel vehicles. NOx gasses react in the atmosphere to form smog and acid rain. The Bosch Denoxtronic system is made up of an SCR catalyst and a urea dosing system. When combined, these components convert up to 95% of the harmful NOx emissions in to harmless nitrogen, water, and CO2. This allows diesel engines to run leaner and burn less fuel without the harmful emissions previously caused by lean conditions.

The Denoxtronic 2.2 system was specifically developed for use in diesel powered heavy commercial and off highway vehicles.

See other side for Key Applications

Bosch Denoxtronic and Departronic exhaust-gas treatment:

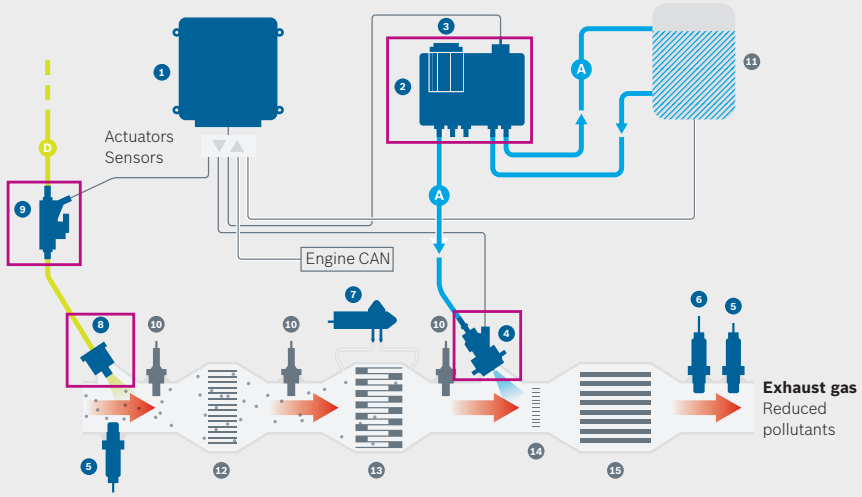

Bosch components

1. Dosing control unit / electronic engine control unit
2. Supply module
3. Denoxtronic filter
4. Dosing module
5. NO_x sensor
6. Particulate matter sensor
7. Differential pressure sensor
8. Diesel injection unit
9. Diesel metering unit with shut-off valve

Other components

10. Exhaust-gas temperature sensor
11. AdBlue® tank
12. Oxidation catalyst
13. Coated diesel particulate filter
14. Mixer
15. SCR catalytic converter with ammonia slip catalyst

A AdBlue®
D Diesel
— Electronic connection
Hot

Replacement of individual Denoxtronic modules:

Denoxtronic 2.2

Supply Module
Pumps fluid from DEF tank and pressurizes it for injection



Dosing Module
Injects the DEF fluid into the exhaust





Key Applications

Application	Part Description	Bosch PN	OE X-ref	Bosch Filter PN
AGCO	Dosing Module	0444023011	V837072107	NA
CAT	Supply Module 12V	0444042059	398474600	1457436033
CAT	Supply Module 24V	0444042061	398474700	1457436033
CAT/Perkins	Dosing Module	0444043115	424420500 460925600 T401183	NA
CAT/Perkins	Dosing Module	0444043117	398538600 460925700 T415829 T420096	NA
CNH	Supply module	0444022021	84246892	1457436006
CNH	Supply module	0444042146	47565934	1457436033
CNH	Dosing Module	0444023058	84247021 47511724	NA
CNH	Dosing Module	0444023062	84248058 47511725	NA
CNH	Dosing Module	0444025027	47581674	NA
Cummins	Supply Module 12V w/o check valve	0444042132	4387304	1457436033
Cummins	Supply Module 24V w/o check valve	0444042133	4387305	1457436033
Cummins	Supply Module 12V w/ check valve	0444042134	4387657	1457436033
Cummins	Supply Module 24V w/ check valve	0444042137	4387658	1457436033
Cummins	Dosing Module	0444043017	2880156	NA
Cummins	Dosing Module	0444043031	2888112 A030F171	NA
Cummins	Dosing Module	0444043033	2888173 A030P707	NA
Cummins	Dosing Module	0444043008	2 871 878 A028Y791	NA
Cummins	Dosing Module	0444043051	5305254 A043C088	NA
DEERE	Supply Module 12V	0444042066	RE552175	1457436033
DEERE	Supply Module 24V	0444042067	RE553796	1457436033
DEERE	Dosing Module	0444043045	RE560468	NA
DEERE	Dosing Module	0444043046	RE555626	NA
Doosan/Bobcat	Supply module	0444110003	30062800302	1457436050
Doosan/Bobcat	Dosing Module	0444043059	30063000015	NA
HINO	Supply Module 12V	0444042096	S17H0E0010 S17H0E0011 S17H0E0012	F00BH40301
HINO	Dosing Module	0444043060	S17J0E0011	NA
HINO	Dosing Module	0444043072	S17J0E0020	NA
Isuzu	Supply module	0444042151	8982688110	F00BH40301
Isuzu	Dosing module	0444043107	8982318982	NA
Mack	Supply Module 24V	0444042012	21576178	1457436033
Mack	Dosing Module	0444023067	21647145	NA
Mack/Volvo	Supply module	0444042157	21647139 22851853	1457436033
Mack/Volvo	Supply module	0444042155	21574975 22851845	1457436033
Mack/Volvo	Supply Module 12V	0444042009	21577511 21577507	1457436033
Mack/Volvo	Dosing Module	0444043087	22391565 22391563	NA
Volvo	Dosing Module	0444043155	22744063	NA
Volvo	Dosing Module	0444043159	22757148	NA

NA=Not Applicable

www.boschautoparts.com
1808003

BOSCH is a trademark licensed by Robert Bosch GmbH and/or its affiliated entities.
© 2018 Robert Bosch LLC, USA. All rights reserved.



A Bosch Guide to

Choosing the Right Common Rail Injector

BOSCH

Invented for life



The common rail system is a major advancement in diesel technology. Bosch launched its common rail system for passenger car diesel engines in 1997, which provides diesel engines with quieter performance, improved fuel economy, higher torque, and lower emissions.

Each individual engine cylinder houses a common rail injector. When one or more injectors need to be replaced, you may wonder what replacement options you have.

Make a Smart Choice

Bosch diesel fuel injectors fall into three categories:

- **Genuine OE Injectors**
  Bosch injectors are the standard for the industry and provide superior performance and durability. Bosch injectors are manufactured to original equipment specifications.
- **Remanufactured Injectors**
  Bosch's remanufactured injectors are produced at the same Bosch facility as their new injectors. All wearable parts and critical components are replaced with genuine Bosch parts, and the latest OE production technology is used. Bosch remanufactured injectors include all OE updates, so they can often be superior to the OE injectors that they replace.
- **Injectors from an Authorized Bosch Common Rail Field Repair Location**
  Bosch Common Rail Injector authorized diesel service facilities have the necessary Bosch equipment and training to rebuild Bosch injectors locally with the assurance that each injector meets the OE performance requirements.

Bosch is standard equipment on many diesel engines today. Replacing your injectors with Bosch new, remanufactured or Bosch-authorized rebuilt injectors is a smart choice.

Testing Proves it

Bosch conducted an intense evaluation of non-authorized injectors available in the market. Our evaluation included testing on our EPS-815 test bench with Bosch patented Shot to Shot (SST) functionality including OEM (original equipment manufacturer) specifications. After the testing was performed, Bosch did an injector tear-down for inspection.

More than 50 percent failed, and presented a significant hazard to the engine if installed in a diesel common rail system. These hazards included:

- Loss of power
- Decreased fuel economy
- Failure to operate after a short period of time
- Increased Noise
- No start
- Smoke
- Engine damage
- Exhaust system damage

These injectors could operate for weeks or months before causing the engine and exhaust system to malfunction. One failed injector could lead to complete engine failure.

Did You Know? Bosch is the leading OE supplier of diesel fuel injectors for diesel passenger cars, SUVs, vans, and pickup trucks.

Non-OEM Approved Remanufactured Products

Not all remanufactured injectors are the same. The quality of any remanufactured injector depends on the remanufacturing process and components. During our testing process, we have found that many of the components removed from non-authorized injectors were outside of the original design specifications and some had corrosion and pitting, which compromises performance. *(See photos)*

You might get a great deal on these non-OEM approved products, but you are taking a huge risk that these injectors may not be better than the one you are trying to replace.

What Can I Do?

Make sure your vehicle is being serviced by a reputable shop. Ask about the fuel system components used on your diesel engine to ensure they are from a Bosch approved supplier.

Tear-down findings from Bosch testing process





1 New Bosch armature 2 Competitor armature removed from a reman injector out of the box before installation. Note the varnishing and corrosion, which can lead to inconsistent operation.

Tear-down findings from Bosch testing process





1 Sealing surface for a new Bosch valve body.

2 Sealing surface of a competitor valve body that was taken from a reman injector out of the box before installation. The sealing surface has been reground to remove the wear. This treatment alters the sealing surface and overall injector performance.

Tear-down findings from Bosch testing process





1 New Bosch valve body 2 Competitor valve body removed from a reman injector out of the box before installation. The manufacturer inserted a used part that has discoloration, corrosion and pitting. This can cause friction during movement of the valve piston, which can compromise performance.

All Common Rail Injectors are not created equal

	Bosch Remanufactured Injectors	Authorized Bosch Common Rail Field Repair location*	3rd Party Injectors
Produced with a mixture of new OE components and reconditioned OE components	●	▲	?
End of line testing using the exact OE test specifications	●	●	?
Guaranteed to offer OE performance	●	●	?
Guaranteed to meet all emission specs	●	●	?
1 year, Unlimited Mileage Warranty	●	▲	?
Injectors built with parts with known or proven reliability and durability	●	●	?
Continuous improvement, injector produced with the latest upgrades to components and specifications	●	▲	?
Nationwide Bosch warranty coverage	●	●	?
Built on a high speed, highly automated OE production line	●		
Built with Bosch-designed tooling, fixtures and test equipment		●	?

● Has this feature ▲ Depends on manufacturer ? Unknown * Pertains only to North American locations



BOSCH

Invented for life

Robert Bosch LLC
Broadview, Illinois 60155

www.boschautoparts.com

BOSCH is a trademark licensed by Robert Bosch GmbH and/or its affiliated entities.
© 2015 Robert Bosch LLC, U.S.A. All rights reserved.

15010577

Kirk's Automotive Inc.

Item: **DEF DOSING UNIT PUMP CHAMPION**

Attachments

Request For Approved Equals BOSCH.pdf

Request for Approved Equals
Solicitation 20-13
Cummins Auto Parts Bid

Item Number 20-13-01-12

EZ Rider Number 2871878NX

Description: DOSER VALVE DEF INJ

Approved Equal Part Number: BOSCH 444043008

Item Number 20-13-01-14

Champion Number 4387304RX

Description: DEF DOSING UNIT PUMP

Approved Equal Part Number: BOSCH 444042132

Exception to L. Delivery Schedules - BOSCH parts will be delivered in three (3) to four (4) business days.

Requested By:

Kirk's Automotive, Inc.
9330 Roselawn, St.
Detroit, MI 48204
800-321-5989
www.Kirksonline.net

Denoxtronic 2.2 – SCR System for Heavy Commercial and Off-Highway Vehicles

BOSCH
Invented for life



In order to reduce the environmental burden of toxic substances emitted by motor vehicles, in 2010 the Environmental Protection Agency (EPA) mandated that the worldwide limits for emissions from motor vehicles be continuously reduced.

The Bosch Denoxtronic System is the leading OEM emissions solution utilizing Selective Catalytic Reduction (SCR) technology. SCR technology is an Exhaust Gas Treatment strategy designed to reduce oxides of nitrogen (NOx) emissions from diesel vehicles. NOx gasses react in the atmosphere to form smog and acid rain. The Bosch Denoxtronic system is made up of an SCR catalyst and a urea dosing system. When combined, these components convert up to 95% of the harmful NOx emissions in to harmless nitrogen, water, and CO2. This allows diesel engines to run leaner and burn less fuel without the harmful emissions previously caused by lean conditions.

The Denoxtronic 2.2 system was specifically developed for use in diesel powered heavy commercial and off highway vehicles.

See other side for Key Applications

Bosch Denoxtronic and Departronic exhaust-gas treatment:

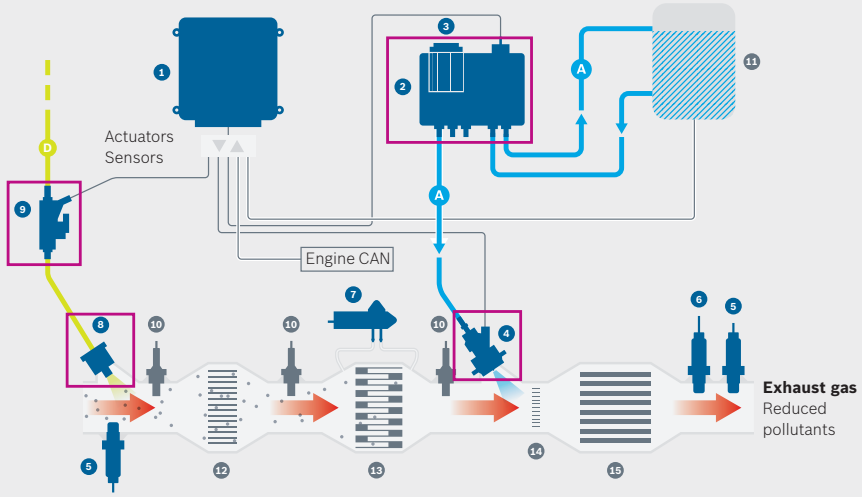

Bosch components

1. Dosing control unit / electronic engine control unit
2. Supply module
3. Denoxtronic filter
4. Dosing module
5. NO_x sensor
6. Particulate matter sensor
7. Differential pressure sensor
8. Diesel injection unit
9. Diesel metering unit with shut-off valve

Other components

10. Exhaust-gas temperature sensor
11. AdBlue® tank
12. Oxidation catalyst
13. Coated diesel particulate filter
14. Mixer
15. SCR catalytic converter with ammonia slip catalyst

A AdBlue®
D Diesel
— Electronic connection
Hot

Replacement of individual Denoxtronic modules:

Denoxtronic 2.2

Supply Module
Pumps fluid from DEF tank and pressurizes it for injection



Dosing Module
Injects the DEF fluid into the exhaust





Key Applications

Application	Part Description	Bosch PN	OE X-ref	Bosch Filter PN
AGCO	Dosing Module	0444023011	V837072107	NA
CAT	Supply Module 12V	0444042059	398474600	1457436033
CAT	Supply Module 24V	0444042061	398474700	1457436033
CAT/Perkins	Dosing Module	0444043115	424420500 460925600 T401183	NA
CAT/Perkins	Dosing Module	0444043117	398538600 460925700 T415829 T420096	NA
CNH	Supply module	0444022021	84246892	1457436006
CNH	Supply module	0444042146	47565934	1457436033
CNH	Dosing Module	0444023058	84247021 47511724	NA
CNH	Dosing Module	0444023062	84248058 47511725	NA
CNH	Dosing Module	0444025027	47581674	NA
Cummins	Supply Module 12V w/o check valve	0444042132	4387304	1457436033
Cummins	Supply Module 24V w/o check valve	0444042133	4387305	1457436033
Cummins	Supply Module 12V w/ check valve	0444042134	4387657	1457436033
Cummins	Supply Module 24V w/ check valve	0444042137	4387658	1457436033
Cummins	Dosing Module	0444043017	2880156	NA
Cummins	Dosing Module	0444043031	2888112 A030F171	NA
Cummins	Dosing Module	0444043033	2888173 A030P707	NA
Cummins	Dosing Module	0444043008	2 871 878 A028Y791	NA
Cummins	Dosing Module	0444043051	5305254 A043C088	NA
DEERE	Supply Module 12V	0444042066	RE552175	1457436033
DEERE	Supply Module 24V	0444042067	RE553796	1457436033
DEERE	Dosing Module	0444043045	RE560468	NA
DEERE	Dosing Module	0444043046	RE555626	NA
Doosan/Bobcat	Supply module	0444110003	30062800302	1457436050
Doosan/Bobcat	Dosing Module	0444043059	30063000015	NA
HINO	Supply Module 12V	0444042096	S17H0E0010 S17H0E0011 S17H0E0012	F00BH40301
HINO	Dosing Module	0444043060	S17J0E0011	NA
HINO	Dosing Module	0444043072	S17J0E0020	NA
Isuzu	Supply module	0444042151	8982688110	F00BH40301
Isuzu	Dosing module	0444043107	8982318982	NA
Mack	Supply Module 24V	0444042012	21576178	1457436033
Mack	Dosing Module	0444023067	21647145	NA
Mack/Volvo	Supply module	0444042157	21647139 22851853	1457436033
Mack/Volvo	Supply module	0444042155	21574975 22851845	1457436033
Mack/Volvo	Supply Module 12V	0444042009	21577511 21577507	1457436033
Mack/Volvo	Dosing Module	0444043087	22391565 22391563	NA
Volvo	Dosing Module	0444043155	22744063	NA
Volvo	Dosing Module	0444043159	22757148	NA

NA=Not Applicable

www.boschautoparts.com
1808003

BOSCH is a trademark licensed by Robert Bosch GmbH and/or its affiliated entities.
© 2018 Robert Bosch LLC, USA. All rights reserved.



A Bosch Guide to
Choosing the Right Common Rail Injector

BOSCH
Invented for life



The common rail system is a major advancement in diesel technology. Bosch launched its common rail system for passenger car diesel engines in 1997, which provides diesel engines with quieter performance, improved fuel economy, higher torque, and lower emissions.

Each individual engine cylinder houses a common rail injector. When one or more injectors need to be replaced, you may wonder what replacement options you have.

Make a Smart Choice

Bosch diesel fuel injectors fall into three categories:

- **Genuine OE Injectors**
  Bosch injectors are the standard for the industry and provide superior performance and durability. Bosch injectors are manufactured to original equipment specifications.
- **Remanufactured Injectors**
  Bosch's remanufactured injectors are produced at the same Bosch facility as their new injectors. All wearable parts and critical components are replaced with genuine Bosch parts, and the latest OE production technology is used. Bosch remanufactured injectors include all OE updates, so they can often be superior to the OE injectors that they replace.
- **Injectors from an Authorized Bosch Common Rail Field Repair Location**
  Bosch Common Rail Injector authorized diesel service facilities have the necessary Bosch equipment and training to rebuild Bosch injectors locally with the assurance that each injector meets the OE performance requirements.

Bosch is standard equipment on many diesel engines today. Replacing your injectors with Bosch new, remanufactured or Bosch-authorized rebuilt injectors is a smart choice.

Testing Proves it

Bosch conducted an intense evaluation of non-authorized injectors available in the market. Our evaluation included testing on our EPS-815 test bench with Bosch patented Shot to Shot (SST) functionality including OEM (original equipment manufacturer) specifications. After the testing was performed, Bosch did an injector tear-down for inspection.

More than 50 percent failed, and presented a significant hazard to the engine if installed in a diesel common rail system. These hazards included:

- Loss of power
- Decreased fuel economy
- Failure to operate after a short period of time
- Increased Noise
- No start
- Smoke
- Engine damage
- Exhaust system damage

These injectors could operate for weeks or months before causing the engine and exhaust system to malfunction. One failed injector could lead to complete engine failure.

Did You Know? Bosch is the leading OE supplier of diesel fuel injectors for diesel passenger cars, SUVs, vans, and pickup trucks.

Non-OEM Approved Remanufactured Products

Not all remanufactured injectors are the same. The quality of any remanufactured injector depends on the remanufacturing process and components. During our testing process, we have found that many of the components removed from non-authorized injectors were outside of the original design specifications and some had corrosion and pitting, which compromises performance. *(See photos)*

You might get a great deal on these non-OEM approved products, but you are taking a huge risk that these injectors may not be better than the one you are trying to replace.

What Can I Do?

Make sure your vehicle is being serviced by a reputable shop. Ask about the fuel system components used on your diesel engine to ensure they are from a Bosch approved supplier.

Tear-down findings from Bosch testing process





1 New Bosch armature 2 Competitor armature removed from a reman injector out of the box before installation. Note the varnishing and corrosion, which can lead to inconsistent operation.

Tear-down findings from Bosch testing process





1 Sealing surface for a new Bosch valve body.

2 Sealing surface of a competitor valve body that was taken from a reman injector out of the box before installation. The sealing surface has been reground to remove the wear. This treatment alters the sealing surface and overall injector performance.

Tear-down findings from Bosch testing process





1 New Bosch valve body 2 Competitor valve body removed from a reman injector out of the box before installation. The manufacturer inserted a used part that has discoloration, corrosion and pitting. This can cause friction during movement of the valve piston, which can compromise performance.

All Common Rail Injectors are not created equal

	Bosch Remanufactured Injectors	Authorized Bosch Common Rail Field Repair location*	3rd Party Injectors
Produced with a mixture of new OE components and reconditioned OE components	●	▲	?
End of line testing using the exact OE test specifications	●	●	?
Guaranteed to offer OE performance	●	●	?
Guaranteed to meet all emission specs	●	●	?
1 year, Unlimited Mileage Warranty	●	▲	?
Injectors built with parts with known or proven reliability and durability	●	●	?
Continuous improvement, injector produced with the latest upgrades to components and specifications	●	▲	?
Nationwide Bosch warranty coverage	●	●	?
Built on a high speed, highly automated OE production line	●		
Built with Bosch-designed tooling, fixtures and test equipment		●	?

● Has this feature ▲ Depends on manufacturer ? Unknown * Pertains only to North American locations



BOSCH

Invented for life

Robert Bosch LLC
Broadview, Illinois 60155

www.boschautoparts.com

BOSCH is a trademark licensed by Robert Bosch GmbH and/or its affiliated entities.
© 2015 Robert Bosch LLC, U.S.A. All rights reserved.

15010577

Kirk's Automotive Inc.

Item: **INLET NOX SENSOR CHAMPION**

Attachments

Request For Approved Equals NAPA.pdf

Request for Approved Equals
Solicitation 20-13
Cummins Auto Parts Bid

Item Number 20-13-01-02
Gillig Number 2871960
Description: SENSOR PRESSURE DIFF EXH
Approved Equal Part Number:
NAPA NHD40971271

Exception to L. Delivery Schedules - NAPA parts will be delivered in three (3) to four (4) business days.

Requested By:

Kirk's Automotive, Inc.
9330 Roselawn, St.
Detroit, MI 48204
800-321-5989
www.Kirksonline.net

04/30/20 06:03 PM P A R T I M A G E Page 1

Part: 40971271 Line: NHD Desc: DPF PRESSURE SENSOR



Sensor - Back View

Features & Benefits
The Diesel Particulate Filter (DPF) Pressure Sensor measures exhaust pressure, indicating if the Diesel Particulate Filter is clogged. Replacement is essential for better overall drivability and lessens the chance of reduced engine power.; Direct replacement for a proper fit every time; Constructed of copper, rubber and plastic for performance and durability; Easy to install - no special tools required during installation; This part has undergone vehicle try-on testing to meet product standards and quality; The Diesel Particulate Filter (DPF) Pressure Sensor measures exhaust pressure, indicating if the Diesel Particulate Filter is clogged. Replacement is essential for better overall drivability and lessens the chance of reduced engine power.

Attributes
Brand: NAPA
Package Contents: 1 DPF Pressure Sensor
Sub Brand: OE Solutions
UNSPSC: 41111927

04/30/20 06:03 PM P A R T I M A G E Page 2

Part: 40971271 Line: NHD Desc: DPF PRESSURE SENSOR



Part: 40971271 Line: NHD Desc: DPF PRESSURE SENSOR



Sensor - Front View

*** End of Report ***

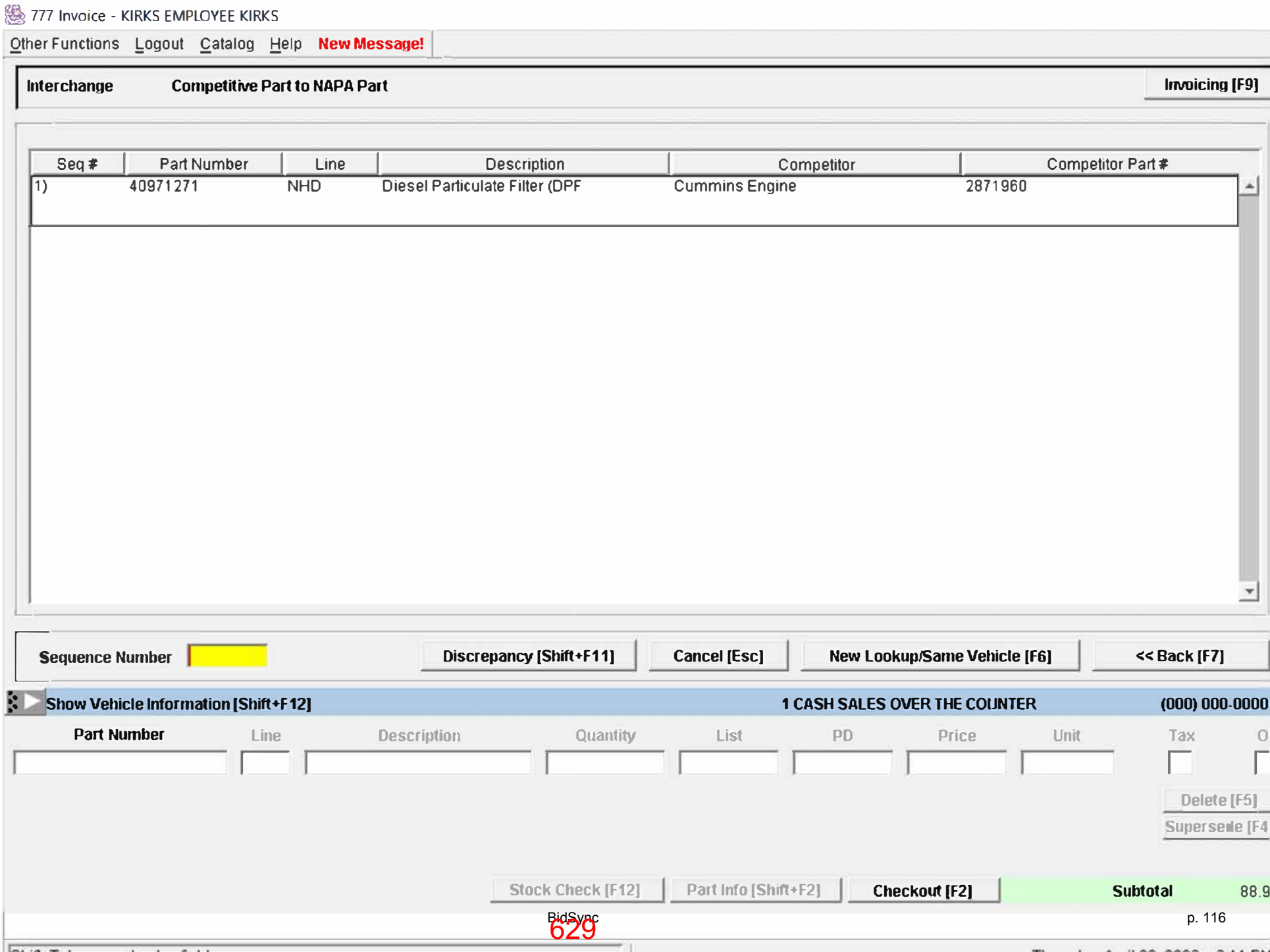
777 Invoice - KIRKS EMPLOYEE KIRKS
Other Functions
Logout
Catalog
Help
New Message!
Interchange
Competitive Part to NAPA Part
Invoicing [F9]
Seq #
Part Number
Line
Description
Competitor
Competitor Part #
1)
40971271
NHD
Diesel Particulate Filter (DPF
Cummins Engine
2871960
Sequence Number
Discrepancy [Shift+F11]
Cancel [Esc]
New Lookup/Same Vehicle [F6]
<< Back [F7]
Show Vehicle Information [Shift+F12]
1 CASH SALES OVER THE COUNTER
(000) 000-0000
Part Number
Line
Description
Quantity
List
PD
Price
Unit
Tax
Delete [F5]
Supersede [F4
Stock Check [F12]
Part Info [Shift+F2]
Checkout [F2]
Subtotal
88.9

NAPA SOLUTIONS LIMITED LIFETIME WARRANTY

At NAPA SOLUTIONS, we take pride in the quality of our products, and your satisfaction with their performance. Thus, NAPA SOLUTIONS warrants its products to be free from defects in material and workmanship under normal use and service. As your exclusive remedy, NAPA SOLUTIONS will replace free of charge any NAPA SOLUTIONS product that, in our reasonable determination, does not comply with the foregoing warranty. This warranty is voided by non-recommended use, improper installation, or physical damage. In addition, NAPA SOLUTIONS will not be liable for any incidental or consequential damages and your exclusive remedy shall be replacement of the product that did not comply with this limited warranty.

ALL OTHER WARRANTIES, EXPRESS OR IMPLIED, INCLUDING WARRANTIES OF FITNESS FOR A PARTICULAR PURPOSE ARE SPECIFICALLY EXCLUDED.

Federal and/or state laws may provide you with other warranties for this product. Some states do not allow the exclusion or limitation of incidental or consequential damages.

Should you need to replace any NAPA SOLUTIONS parts covered under this limited warranty, please see the store of purchase with your used part and original sales receipt.

NDP

Request for Approved Equals
Solicitation 20-13
Cummins Auto Parts Bid

Item Number 20-13-01-04
Champion Number 2894939
Description: OUTLET NOX SENSOR
Approved Equal Part Number:
NAPA NHD73177971

Exception to L. Delivery Schedules - NAPA parts will be delivered in three (3) to four (4) business days.

Requested By:

Kirk's Automotive, Inc.
9330 Roselawn, St.
Detroit, MI 48204
800-321-5989
www.Kirksonline.net

04/30/20 06:48 PM P A R T I M A G E Page 1

Part: 73177971 Line: NHD Desc: NOX SENSOR



Sensor - Right Side View

Features & Benefits
The NOx (Nitrogen Oxide) Sensor is a high-temperature sensor designed to detect NOx levels in diesel-fueled vehicles. Our NOx Sensors are re-engineered for added durability, performance match, and increased efficiency.; Direct replacement for an exact fit, restoring drivability and proper engine functionality; Complete with aluminum housing construction and heat sleeve to protect against both warping and cracking; Anti-seize coating pre-applied to prevent high temperatures from damaging the unit; Rigorous quality inspection and testing has been undertaken to ensures conformance to product standards; The NOx (Nitrogen Oxide) Sensor is a high-temperature sensor designed to detect NOx levels in diesel-fueled vehicles. Our NOx Sensors are re-engineered for added durability, performance match, and increased efficiency.

Attributes
Brand: NAPA
Harness Length: 620 mm
Sub Brand: OE Solutions
UNSPSC: 41113108

04/30/20 06:48 PM P A R T I M A G E Page 2

Part: 73177971 Line: NHD Desc: NOX SENSOR



Part: 73177971 Line: NHD Desc: NOX SENSOR



Sensor - Left View

*** End of Report ***

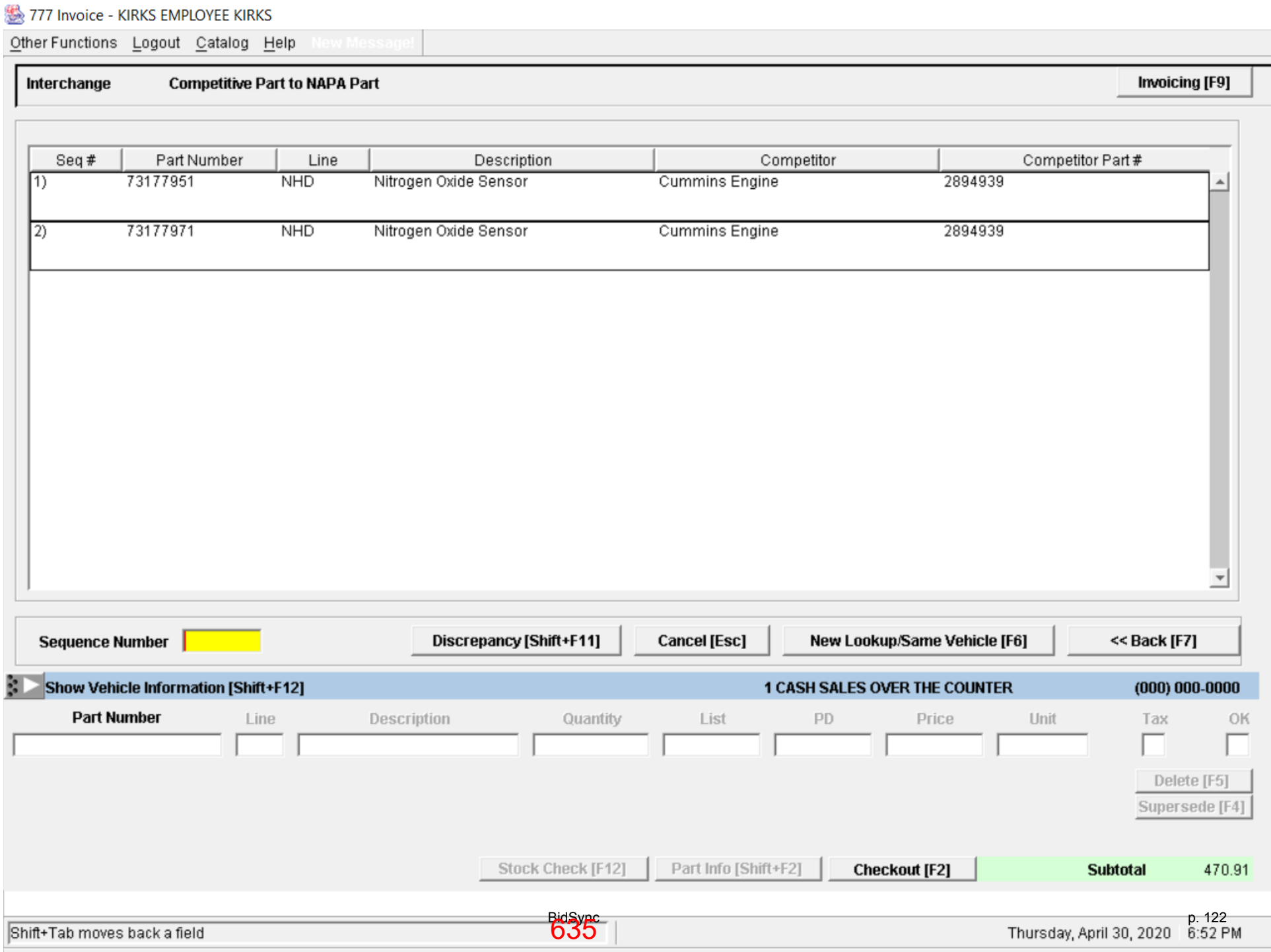
777 Invoice - KIRKS EMPLOYEE KIRKS
Other Functions Logout Catalog Help New Message!
Interchange
Competitive Part to NAPA Part
Invoicing [F9]
Seq # | Part Number | Line | Description | Competitor | Competitor Part #
1) 73177951 NHD Nitrogen Oxide Sensor Cummins Engine 2894939
2) 73177971 NHD Nitrogen Oxide Sensor Cummins Engine 2894939
Sequence Number
Discrepancy [Shift+F11]
Cancel [Esc]
New Lookup/Same Vehicle [F6]
<< Back [F7]
Show Vehicle Information [Shift+F12]
1 CASH SALES OVER THE COUNTER
(000) 000-0000
Part Number | Line | Description | Quantity | List | PD | Price | Unit | Tax | OK
Delete [F5]
Supersede [F4]
Stock Check [F12]
Part Info [Shift+F2]
Checkout [F2]
Subtotal 470.91
Shift+Tab moves back a field
Thursday, April 30, 2020 6:52 PM

Request for Approved Equals
Solicitation 20-13
Cummins Auto Parts Bid

Item Number 20-13-01-15
Champion Number 5293295NX
Description: INLET NOX SENSOR
Approved Equal Part Number:
NAPA NHD73177961

Exception to L. Delivery Schedules - NAPA parts will be delivered in three (3) to four (4) business days.

Requested By:

Kirk's Automotive, Inc.
9330 Roselawn, St.
Detroit, MI 48204
800-321-5989
www.Kirksonline.net

04/30/20 06:59 PM P A R T I M A G E Page 1

Part: 73177961 Line: NHD Desc: NOX SENSOR



Sensor - Right Side View

Features & Benefits
The NOx (Nitrogen Oxide) Sensor is a high-temperature sensor designed to detect NOx levels in diesel-fueled vehicles. Our NOx Sensors are re-engineered for added durability, performance match, and increased efficiency.; Direct replacement for an exact fit, restoring drivability and proper engine functionality; Complete with aluminum housing construction and heat sleeve to protect against both warping and cracking; Anti-seize coating pre-applied to prevent high temperatures from damaging the unit; Rigorous quality inspection and testing has been undertaken to ensures conformance to product standards; The NOx (Nitrogen Oxide) Sensor is a high-temperature sensor designed to detect NOx levels in diesel-fueled vehicles. Our NOx Sensors are re-engineered for added durability, performance match, and increased efficiency.

Attributes
Brand: NAPA
Harness Length: 620 mm
Sub Brand: OE Solutions
UNSPSC: 41113108

04/30/20 06:59 PM P A R T I M A G E Page 2

Part: 73177961 Line: NHD Desc: NOX SENSOR



Part: 73177961 Line: NHD Desc: NOX SENSOR



Sensor - Left View

*** End of Report ***

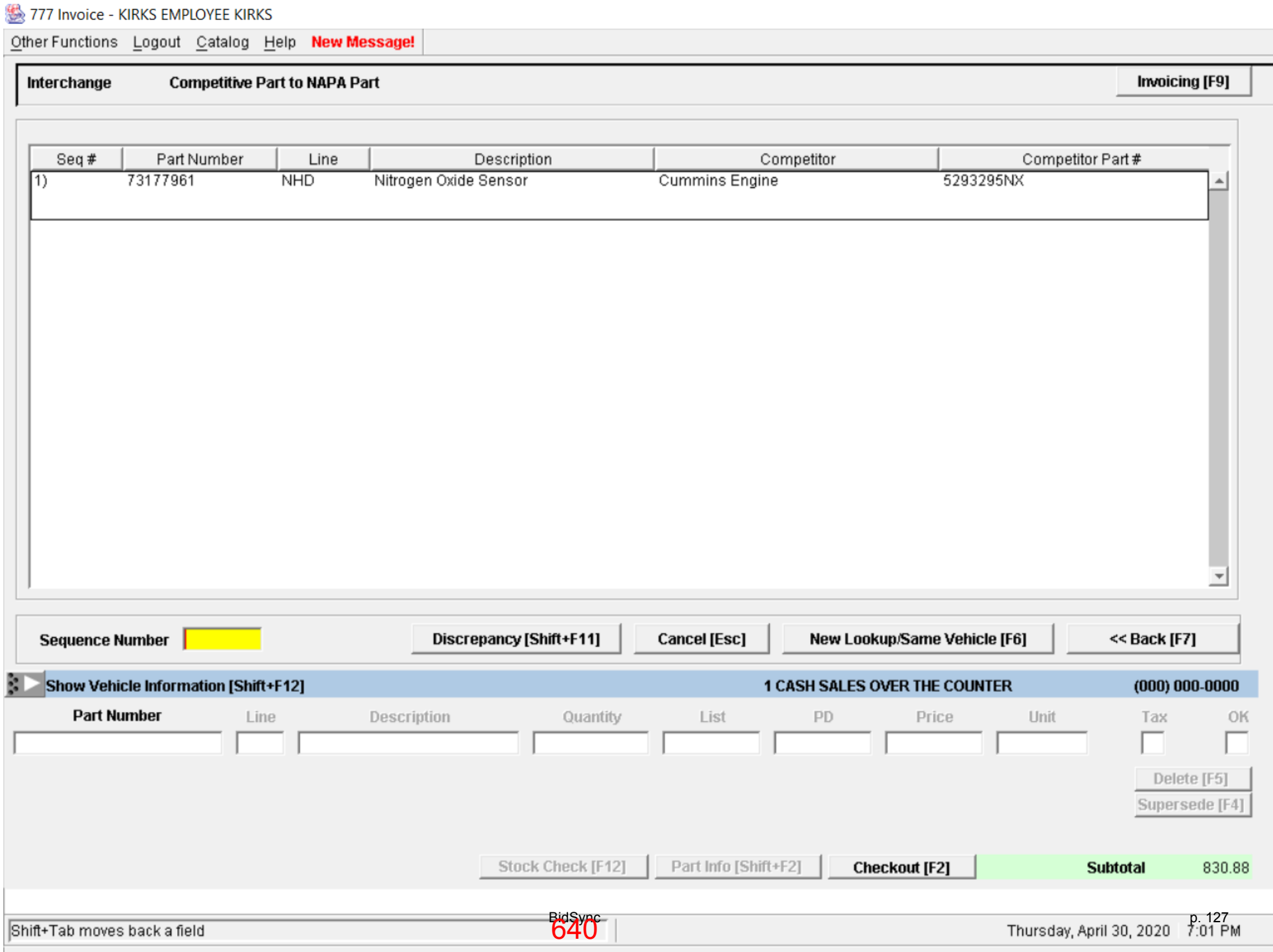
777 Invoice - KIRKS EMPLOYEE KIRKS
Other Functions Logout Catalog Help New Message!
Interchange
Competitive Part to NAPA Part
Invoicing [F9]
Seq # | Part Number | Line | Description | Competitor | Competitor Part #
1) | 73177961 | NHD | Nitrogen Oxide Sensor | Cummins Engine | 5293295NX
Sequence Number
Discrepancy [Shift+F11]
Cancel [Esc]
New Lookup/Same Vehicle [F6]
<< Back [F7]
Show Vehicle Information [Shift+F12]
1 CASH SALES OVER THE COUNTER
(000) 000-0000
Part Number | Line | Description | Quantity | List | PD | Price | Unit | Tax | OK
Delete [F5]
Supersede [F4]
Stock Check [F12]
Part Info [Shift+F2]
Checkout [F2]
Subtotal 830.88
Shift+Tab moves back a field
Thursday, April 30, 2020 7:01 PM

Kirk's Automotive Inc.

Item: **AIR COMPRESSOR CHAMPION**

Attachments

Request For Approved Equals Kirks Reman.pdf

Request for Approved Equals
Solicitation 20-13
Cummins Auto Parts Bid

Item Number 20-13-01-16
Champion Number 5301082RX
Description: AIR COMPRESSOR
Approved Equal Part Number:
Kirk's Reman 5301082RXK

Exception to L. Delivery Schedules - Kirk's parts will be delivered in three (3) to four (4) business days.

Requested By:

Kirk's Automotive, Inc.
9330 Roselawn, St.
Detroit, MI 48204
800-321-5989
www.Kirksonline.net



5301082RXK Cummins / Wabco

- All internal components go through a detailed inspection process with state-of-the-art measuring devices, then are reused or replaced.
- All wearable parts (springs, rubber parts ,gaskets, o-rings, etc.) replaced 100%
- Compressor cylinders are crosshatch honed and gauged with precision for long life reliability.
- Torque is carefully controlled on critical fasteners.
- All moving parts are machined or replaced for reliability.
- All necessary gaskets are included for trouble-free installation.
- One-year warranty
- Tested prior to shipment ensuring
- Remanufactured to OEM specifications or better

TECHNICAL SPECS

OEM Number	5286960, 9111530140, 9111530147, 5301082
Bore Size	85MM
Cubic Feet Per Minute	18.7
Water Port	3/4" - 16 STOR
Discharge Port	M27 - 2.0 STOR
Thru-Drive	11T
Governor Port	M10 - 1.0 STOR
Model	SS318
Core Group	WAB18

Part No.	Description	Water ports	Discharge Port	Governor Port	Tooth Gear Drive
9111530147X	Single Cylinder Reman Compressor	3/4" – 16 STOR	M27 – 2.0 STOR	M10 – 1.0 STOR	11 Teeth

Kirk's Limited Warranty for Remanufactured Products

Kirk's Automotive, Inc. warrants to the purchaser of Kirk's remanufactured product(s) that the product(s) is free of defects in workmanship and materials. Any defective unit will be exchanged free of charge if returned in an assembled condition to Kirk's Automotive, Inc. within one year from the date of installation.

This warranty does not cover remanufactured product(s) that fail due to improper installation and/or maintenance by the purchaser.

Kirk's Automotive, Inc. hereby expressly disclaims any liability for incidental or consequential damages. Obligations under this warranty and any other expressed or implied warranties provided under the Uniform Commercial Code (U.C.C.) and the laws of the State of Michigan, including but not limited to the implied warranties of merchantability and fitness for a particular purpose, shall expire one year from the date of installation.

Kirk's Automotive Inc.

Item: **DPF Filter**

Attachments

Request For Approved Equals RoadWarrior.pdf

Request for Approved Equals for DPF's & DOC's Manufactured by:

ROADWARRIOR

Requested By:

Kirk's Automotive, Inc.
9330 Roselawn, St.
Detroit, MI 48204
800-321-5989
www.Kirksonline.net

Kirk's Automotive, Inc. is requesting that DCTA approve the following RoadWarrior manufactured products as approved equals for the Item numbers listed below for this Solicitation as well as future bids at DCTA.

Item #	OEM Part No.	Proposed Approved Equal Manufacturer and Part No.
20-13-01-18 20-13-01-20	2871462	RoadWarrior Part No. C0098-SA
20-13-01-19	2871571	RoadWarrior Part No. C0180-ID
20-13-01-21	2880589NX	RoadWarrior Part No. C0142-ID
20-13-01-22	5295605NX	RoadWarrior Part No. C0153-SA
20-13-01-23	4965244	RoadWarrior Part No. COOO4-SA
20-13-01-24	5287191NX	RoadWarrior Part No. C0028-ID

L. Delivery Schedules

RoadWarrior DPF's, DOC's, Gaskets and Clamps will be shipped from the Dallas RoadWarrior warehouse for delivery within one business day.

In support of these requests, enclosed are specifications, a DPF Regeneration Analysis, an Engineering Assessment of RoadWarrior DPF's, and RoadWarrior's Warranty Policy.

ROADWARRIOR™

ABOUT PARTS LIST RESOURCES CONTACT US

Warranty Informaon

LIMITED WARRANTY for Roadwarrior® DPFs and DOCs

Roadwarrior America Inc. ("**RWAI**") warrants that the Roadwarrior® diesel parcula te filters (DPFs) and diesel oxidaon c atalysts (DOCs)(the "**Product**") furnished by RWAI to its customers (the "**Customers**") are free from defects in materials and workmanship. The foregoing warranes (c ollecv ely, the "**Warranty**") are subject to the terms and condions c ontained in this Limited Warranty Statement and shall be in force and effect for a period of twelve (12) months a. er the date of RWAI shipment of the Product to the Customer (the "**Warranty Period**"). Upon expiraon of the W arranty Period, all liability of RWAI in respect of the Warranty shall terminate.

The Warranty does not cover Customer negligence or willful damage or cosmec damage to the Product; nor does it cover damage to or replacement of consumables used by the Customer in the operaon of the Pr oduct, including, without limitaon, g askets, hoses, fings, pr essure sensors, temperature sensors and batteries. RWAI expressly disclaims liability for these events and categories of damage.

The Warranty is condional upon s trict compliance with the operaon and maintenance of the vehicle and Product in accordance with the procedures specified by the vehicle OEM.A Warranty claim is condional upon the Cus tomer giving RWAI wri en noce within fi een (15) days following the date on which the Customer discovers the Product defect or becomes aware of its non-conformance.

Noce of a W arranty claim shall be sent to RWAI, as follows:

Transportation Authority

Roadwarrior America Inc.
ATTN: Customer Support
12620 FM 1960 W
Ste A4, Box #560
Houston, TX 77065

Email: info@roadwarrior-inc.com
Telephone: 1-877-897-9759

Upon receipt of a Warranty claim, RWAI shall be entled t o request that the Customer return the defecv e Product to RWAI at the above address, freight pre-paid by the Customer. If RWAI in its sole discreon de termines that a site visit is required to evaluate the validity of the Warranty claim, the Customer shall provide reasonable access to the Product wherever located. The Customer shall provide RWAI with a record of the installaon da te of the Product and the mileage accumulated by the vehicle with the Product installed. The Customer obligaons in this par agraph are condions of the W arranty. **Failure of the Customer to meet any of these or other condions specified in the W arranty shall relieve RWAI of all liability under the Warranty.**

Upon determinaon tha t a Warranty claim is valid, RWAI shall at its opon:

(a) replace the Product;
(b) replace the non-performing components of the Product;
(c) make all necessary repairs or modificaons t o the non-performing components of the defecv e Product; or
(d) refund the purchase price of the defecv e Product at the following rates:

0-150,000 miles 100%
150,001-200,000 miles 75%
200,001-250,000 miles 50%
greater than 250,000 miles 25%.

Where applicable, RWAI shall deliver the new or refurbished Product or components to the Customer, freight pre-paid by RWAI. RWAI shall also be responsible for the cost of materials, labor and engineering relang t o the replacement, modificaon and/ or repairs of the Product or components. All other costs of removal and/or re-installaon of the Pr oduct or components associated with RWAI's Warranty services shall be borne by the Customer. If RWAI conducts a site visit to evaluate the Warranty claim, all out-of-pocket costs of such site visit (including travel, accommodaon and meals) shall be borne by RWAI in the event of a valid Warranty claim or by the Customer in the event of an invalid Warranty claim.

RWAI'S TOTAL LIABILITY UNDER THE WARRANTY SHALL IN NO CASE EXCEED THE ACTUAL MONEY PAID BY THE CUSTOMER FOR THE PRODUCT WHICH GIVES RISE TO THE LIABILITY. IN NO EVENT WILL RWAI AND ITS OFFICERS, DIRECTORS, AGENTS AND EMPLOYEES BE LIABLE FOR INCIDENTAL, INDIRECT, SPECIAL OR CONSEQUENTIAL DAMAGES (EVEN IF RWAI HAS BEEN ADVISED OF THE POSSIBILITY THEREOF) INCLUDING, WITHOUT LIMITATION, LOST PROFITS, LOST BUSINESS REVENUE, OTHER COMMERCIAL OR ECONOMIC LOSS OF ANY KIND OR ANY CLAIM AGAINST THE CUSTOMER BY A THIRD PARTY IRRESPECTIVE OF THE NATURE OF THE CAUSE OF ACTION INCLUDING, WITHOUT LIMITATION, BREACH OF CONTRACT OR TORT. IN NO EVENT SHALL RWAI BE LIABLE FOR THE COST OF PROCUREMENT OF SUBSTITUTE PRODUCTS.

THE WARRANTY IN THIS LIMITED WARRANTY STATEMENT IS EXCLUSIVE AND IN LIEU OF ALL OTHER EXPRESS OR IMPLIED WARRANTIES OR CONDITIONS IN RESPECT OF THE PRODUCT, INCLUDING, WITHOUT LIMITATION, ALL IMPLIED WARRANTIES OF MERCHANTABILITY, FITNESS FOR A PARTICULAR PURPOSE, TITLE OR INFRINGEMENT OF INTELLECTUAL PROPERTY RIGHTS THE REMEDIES PROVIDED IN THIS LIMITED WARRANTY STATEMENT ARE THE CUSTOMER'S SOLE REMEDIES FOR ANY FAILURE OF RWAI TO COMPLY WITH ITS WARRANTY OBLIGATIONS. SOME JURISDICTIONS DO NOT ALLOW THE EXCLUSION OF IMPLIED WARRANTIES. IF SUCH LAWS APPLY, THEN ALL EXPRESS AND IMPLIED WARRANTIES ARE LIMITED TO THE WARRANTY PERIOD SET OUT ABOVE. THE CUSTOMER HAS ACCEPTED THE ABOVE DISCLAIMER OF WARRANTIES AND LIMITATION OF LIABILITY AS PART OF A BARGAIN WITH RESPECT TO THE PRICING OF THE PRODUCT AND UNDERSTANDS THAT THE PRICING WOULD BE HIGHER IF RWAI WERE REQUIRED TO BEAR LIABILITY IN EXCESS OF THAT STATED HEREIN. RWAI neither assumes nor authorizes any person, firm or enty to assume for it any other addional liability or r esponsibility in connecon with the Product, including any affirmaon, r epresentaon, or w arranty concerning the Product made by an agent, employee, or representav e of RWAI, unless the affirmaon, r epresentaon, or w arranty is specifically included with this Limited Warranty Statement.

Some jurisdicons do not allo w limitaons on the dur aon of implied w arranes and/or do not allow the exclusion or limitaon of inciden tal or consequenal damages. If such laws govern this Limited Warranty Statement, the above limitaons and e xclusions shall apply to the fullest extent permi ed by law in the applicable jurisdicon.

This Limited Warranty Statement sets out specific legal rights. The Customer may have other rights which vary from jurisdicon t o jurisdicon.

Kirk's Automotive Inc.

Item: **DPF Filter**

Attachments

Request For Approved Equals RoadWarrior.pdf

Request for Approved Equals for DPF's & DOC's Manufactured by:

ROADWARRIOR

Requested By:

Kirk's Automotive, Inc.
9330 Roselawn, St.
Detroit, MI 48204
800-321-5989
www.Kirksonline.net

Kirk's Automotive, Inc. is requesting that DCTA approve the following RoadWarrior manufactured products as approved equals for the Item numbers listed below for this Solicitation as well as future bids at DCTA.

Item #	OEM Part No.	Proposed Approved Equal Manufacturer and Part No.
20-13-01-18 20-13-01-20	2871462	RoadWarrior Part No. C0098-SA
20-13-01-19	2871571	RoadWarrior Part No. C0180-ID
20-13-01-21	2880589NX	RoadWarrior Part No. C0142-ID
20-13-01-22	5295605NX	RoadWarrior Part No. C0153-SA
20-13-01-23	4965244	RoadWarrior Part No. COOO4-SA
20-13-01-24	5287191NX	RoadWarrior Part No. C0028-ID

L. Delivery Schedules
RoadWarrior DPF's, DOC's, Gaskets and Clamps will be shipped from the Dallas RoadWarrior warehouse for delivery within one business day.

In support of these requests, enclosed are specifications, a DPF Regeneration Analysis, an Engineering Assessment of RoadWarrior DPF's, and RoadWarrior's Warranty Policy.

ROADWARRIOR™

ABOUT PARTS LIST RESOURCES CONTACT US

Warranty Informaon

LIMITED WARRANTY for Roadwarrior® DPFs and DOCs

Roadwarrior America Inc. ("**RWAI**") warrants that the Roadwarrior® diesel parcula te filters (DPFs) and diesel oxidaon c atalysts (DOCs)(the "**Product**") furnished by RWAI to its customers (the "**Customers**") are free from defects in materials and workmanship. The foregoing warranes (c ollecv ely, the "**Warranty**") are subject to the terms and condions c ontained in this Limited Warranty Statement and shall be in force and effect for a period of twelve (12) months a. er the date of RWAI shipment of the Product to the Customer (the "**Warranty Period**"). Upon expiraon of the W arranty Period, all liability of RWAI in respect of the Warranty shall terminate.

The Warranty does not cover Customer negligence or willful damage or cosmec damage to the Product; nor does it cover damage to or replacement of consumables used by the Customer in the operaon of the Pr oduct, including, without limitaon, g askets, hoses, fings, pr essure sensors, temperature sensors and batteries. RWAI expressly disclaims liability for these events and categories of damage.

The Warranty is condional upon s trict compliance with the operaon and maintenance of the vehicle and Product in accordance with the procedures specified by the vehicle OEM.A Warranty claim is condional upon the Cus tomer giving RWAI wri en noce within fi een (15) days following the date on which the Customer discovers the Product defect or becomes aware of its non-conformance.

Noce of a W arranty claim shall be sent to RWAI, as follows:

Transportation Authority

Roadwarrior America Inc.
ATTN: Customer Support
12620 FM 1960 W
Ste A4, Box #560
Houston, TX 77065

Email: info@roadwarrior-inc.com
Telephone: 1-877-897-9759

Upon receipt of a Warranty claim, RWAI shall be entled t o request that the Customer return the defecv e Product to RWAI at the above address, freight pre-paid by the Customer. If RWAI in its sole discreon de termines that a site visit is required to evaluate the validity of the Warranty claim, the Customer shall provide reasonable access to the Product wherever located. The Customer shall provide RWAI with a record of the installaon da te of the Product and the mileage accumulated by the vehicle with the Product installed. The Customer obligaons in this par agraph are condions of the W arranty. **Failure of the Customer to meet any of these or other condions specified in the W arranty shall relieve RWAI of all liability under the Warranty.**

Upon determinaon tha t a Warranty claim is valid, RWAI shall at its opon:

(a) replace the Product;
(b) replace the non-performing components of the Product;
(c) make all necessary repairs or modificaons t o the non-performing components of the defecv e Product; or
(d) refund the purchase price of the defecv e Product at the following rates:

0-150,000 miles 100%
150,001-200,000 miles 75%
200,001-250,000 miles 50%
greater than 250,000 miles 25%.

Where applicable, RWAI shall deliver the new or refurbished Product or components to the Customer, freight pre-paid by RWAI. RWAI shall also be responsible for the cost of materials, labor and engineering relang t o the replacement, modificaon and/ or repairs of the Product or components. All other costs of removal and/or re-installaon of the Pr oduct or components associated with RWAI's Warranty services shall be borne by the Customer. If RWAI conducts a site visit to evaluate the Warranty claim, all out-of-pocket costs of such site visit (including travel, accommodaon and meals) shall be borne by RWAI in the event of a valid Warranty claim or by the Customer in the event of an invalid Warranty claim.

RWAI'S TOTAL LIABILITY UNDER THE WARRANTY SHALL IN NO CASE EXCEED THE ACTUAL MONEY PAID BY THE CUSTOMER FOR THE PRODUCT WHICH GIVES RISE TO THE LIABILITY. IN NO EVENT WILL RWAI AND ITS OFFICERS, DIRECTORS, AGENTS AND EMPLOYEES BE LIABLE FOR INCIDENTAL, INDIRECT, SPECIAL OR CONSEQUENTIAL DAMAGES (EVEN IF RWAI HAS BEEN ADVISED OF THE POSSIBILITY THEREOF) INCLUDING, WITHOUT LIMITATION, LOST PROFITS, LOST BUSINESS REVENUE, OTHER COMMERCIAL OR ECONOMIC LOSS OF ANY KIND OR ANY CLAIM AGAINST THE CUSTOMER BY A THIRD PARTY IRRESPECTIVE OF THE NATURE OF THE CAUSE OF ACTION INCLUDING, WITHOUT LIMITATION, BREACH OF CONTRACT OR TORT. IN NO EVENT SHALL RWAI BE LIABLE FOR THE COST OF PROCUREMENT OF SUBSTITUTE PRODUCTS.

THE WARRANTY IN THIS LIMITED WARRANTY STATEMENT IS EXCLUSIVE AND IN LIEU OF ALL OTHER EXPRESS OR IMPLIED WARRANTIES OR CONDITIONS IN RESPECT OF THE PRODUCT, INCLUDING, WITHOUT LIMITATION, ALL IMPLIED WARRANTIES OF MERCHANTABILITY, FITNESS FOR A PARTICULAR PURPOSE, TITLE OR INFRINGEMENT OF INTELLECTUAL PROPERTY RIGHTS THE REMEDIES PROVIDED IN THIS LIMITED WARRANTY STATEMENT ARE THE CUSTOMER'S SOLE REMEDIES FOR ANY FAILURE OF RWAI TO COMPLY WITH ITS WARRANTY OBLIGATIONS. SOME JURISDICTIONS DO NOT ALLOW THE EXCLUSION OF IMPLIED WARRANTIES. IF SUCH LAWS APPLY, THEN ALL EXPRESS AND IMPLIED WARRANTIES ARE LIMITED TO THE WARRANTY PERIOD SET OUT ABOVE. THE CUSTOMER HAS ACCEPTED THE ABOVE DISCLAIMER OF WARRANTIES AND LIMITATION OF LIABILITY AS PART OF A BARGAIN WITH RESPECT TO THE PRICING OF THE PRODUCT AND UNDERSTANDS THAT THE PRICING WOULD BE HIGHER IF RWAI WERE REQUIRED TO BEAR LIABILITY IN EXCESS OF THAT STATED HEREIN. RWAI neither assumes nor authorizes any person, firm or enty to assume for it any other addional liability or r esponsibility in connecon with the Product, including any affirmaon, r epresentaon, or w arranty concerning the Product made by an agent, employee, or representav e of RWAI, unless the affirmaon, r epresentaon, or w arranty is specifically included with this Limited Warranty Statement.

Some jurisdicons do not allo w limitaons on the dur aon of implied w arranes and/or do not allow the exclusion or limitaon of inciden tal or consequenal damages. If such laws govern this Limited Warranty Statement, the above limitaons and e xclusions shall apply to the fullest extent permi ed by law in the applicable jurisdicon.

This Limited Warranty Statement sets out specific legal rights. The Customer may have other rights which vary from jurisdicon t o jurisdicon.

Kirk's Automotive Inc.

Item: **DPF Filter**

Attachments

Request For Approved Equals RoadWarrior.pdf

Request for Approved Equals for DPF's & DOC's Manufactured by:

ROADWARRIOR

Requested By:

Kirk's Automotive, Inc.
9330 Roselawn, St.
Detroit, MI 48204
800-321-5989
www.Kirksonline.net

Kirk's Automotive, Inc. is requesting that DCTA approve the following RoadWarrior manufactured products as approved equals for the Item numbers listed below for this Solicitation as well as future bids at DCTA.

Item #	OEM Part No.	Proposed Approved Equal Manufacturer and Part No.
20-13-01-18 20-13-01-20	2871462	RoadWarrior Part No. C0098-SA
20-13-01-19	2871571	RoadWarrior Part No. C0180-ID
20-13-01-21	2880589NX	RoadWarrior Part No. C0142-ID
20-13-01-22	5295605NX	RoadWarrior Part No. C0153-SA
20-13-01-23	4965244	RoadWarrior Part No. COOO4-SA
20-13-01-24	5287191NX	RoadWarrior Part No. C0028-ID

L. Delivery Schedules
RoadWarrior DPF's, DOC's, Gaskets and Clamps will be shipped from the Dallas RoadWarrior warehouse for delivery within one business day.

In support of these requests, enclosed are specifications, a DPF Regeneration Analysis, an Engineering Assessment of RoadWarrior DPF's, and RoadWarrior's Warranty Policy.

ROADWARRIOR™

ABOUT PARTS LIST RESOURCES CONTACT US

Warranty Informaon

LIMITED WARRANTY for Roadwarrior® DPFs and DOCs

Roadwarrior America Inc. ("**RWAI**") warrants that the Roadwarrior® diesel parcula te filters (DPFs) and diesel oxidaon c atalysts (DOCs)(the "**Product**") furnished by RWAI to its customers (the "**Customers**") are free from defects in materials and workmanship. The foregoing warranes (c ollecv ely, the "**Warranty**") are subject to the terms and condions c ontained in this Limited Warranty Statement and shall be in force and effect for a period of twelve (12) months a. er the date of RWAI shipment of the Product to the Customer (the "**Warranty Period**"). Upon expiraon of the W arranty Period, all liability of RWAI in respect of the Warranty shall terminate.

The Warranty does not cover Customer negligence or willful damage or cosmec damage to the Product; nor does it cover damage to or replacement of consumables used by the Customer in the operaon of the Pr oduct, including, without limitaon, g askets, hoses, fings, pr essure sensors, temperature sensors and batteries. RWAI expressly disclaims liability for these events and categories of damage.

The Warranty is condional upon s trict compliance with the operaon and maintenance of the vehicle and Product in accordance with the procedures specified by the vehicle OEM.A Warranty claim is condional upon the Cus tomer giving RWAI wri en noce within fi een (15) days following the date on which the Customer discovers the Product defect or becomes aware of its non-conformance.

Noce of a W arranty claim shall be sent to RWAI, as follows:

Dallas Area Rapid Transportation Authority

Roadwarrior America Inc.
ATTN: Customer Support
12620 FM 1960 W
Ste A4, Box #560
Houston, TX 77065

Email: info@roadwarrior-inc.com
Telephone: 1-877-897-9759

Upon receipt of a Warranty claim, RWAI shall be entled t o request that the Customer return the defecv e Product to RWAI at the above address, freight pre-paid by the Customer. If RWAI in its sole discreon de termines that a site visit is required to evaluate the validity of the Warranty claim, the Customer shall provide reasonable access to the Product wherever located. The Customer shall provide RWAI with a record of the installaon da te of the Product and the mileage accumulated by the vehicle with the Product installed. The Customer obligaons in this par agraph are condions of the W arranty. **Failure of the Customer to meet any of these or other condions specified in the W arranty shall relieve RWAI of all liability under the Warranty.**

Upon determinaon tha t a Warranty claim is valid, RWAI shall at its opon:

(a) replace the Product;
(b) replace the non-performing components of the Product;
(c) make all necessary repairs or modificaons t o the non-performing components of the defecv e Product; or
(d) refund the purchase price of the defecv e Product at the following rates:

0-150,000 miles 100%
150,001-200,000 miles 75%
200,001-250,000 miles 50%
greater than 250,000 miles 25%.

Where applicable, RWAI shall deliver the new or refurbished Product or components to the Customer, freight pre-paid by RWAI. RWAI shall also be responsible for the cost of materials, labor and engineering relang t o the replacement, modificaon and/ or repairs of the Product or components. All other costs of removal and/or re-installaon of the Pr oduct or components associated with RWAI's Warranty services shall be borne by the Customer. If RWAI conducts a site visit to evaluate the Warranty claim, all out-of-pocket costs of such site visit (including travel, accommodaon and meals) shall be borne by RWAI in the event of a valid Warranty claim or by the Customer in the event of an invalid Warranty claim.

RWAI'S TOTAL LIABILITY UNDER THE WARRANTY SHALL IN NO CASE EXCEED THE ACTUAL MONEY PAID BY THE CUSTOMER FOR THE PRODUCT WHICH GIVES RISE TO THE LIABILITY. IN NO EVENT WILL RWAI AND ITS OFFICERS, DIRECTORS, AGENTS AND EMPLOYEES BE LIABLE FOR INCIDENTAL, INDIRECT, SPECIAL OR CONSEQUENTIAL DAMAGES (EVEN IF RWAI HAS BEEN ADVISED OF THE POSSIBILITY THEREOF) INCLUDING, WITHOUT LIMITATION, LOST PROFITS, LOST BUSINESS REVENUE, OTHER COMMERCIAL OR ECONOMIC LOSS OF ANY KIND OR ANY CLAIM AGAINST THE CUSTOMER BY A THIRD PARTY IRRESPECTIVE OF THE NATURE OF THE CAUSE OF ACTION INCLUDING, WITHOUT LIMITATION, BREACH OF CONTRACT OR TORT. IN NO EVENT SHALL RWAI BE LIABLE FOR THE COST OF PROCUREMENT OF SUBSTITUTE PRODUCTS.

THE WARRANTY IN THIS LIMITED WARRANTY STATEMENT IS EXCLUSIVE AND IN LIEU OF ALL OTHER EXPRESS OR IMPLIED WARRANTIES OR CONDITIONS IN RESPECT OF THE PRODUCT, INCLUDING, WITHOUT LIMITATION, ALL IMPLIED WARRANTIES OF MERCHANTABILITY, FITNESS FOR A PARTICULAR PURPOSE, TITLE OR INFRINGEMENT OF INTELLECTUAL PROPERTY RIGHTS THE REMEDIES PROVIDED IN THIS LIMITED WARRANTY STATEMENT ARE THE CUSTOMER'S SOLE REMEDIES FOR ANY FAILURE OF RWAI TO COMPLY WITH ITS WARRANTY OBLIGATIONS. SOME JURISDICTIONS DO NOT ALLOW THE EXCLUSION OF IMPLIED WARRANTIES. IF SUCH LAWS APPLY, THEN ALL EXPRESS AND IMPLIED WARRANTIES ARE LIMITED TO THE WARRANTY PERIOD SET OUT ABOVE. THE CUSTOMER HAS ACCEPTED THE ABOVE DISCLAIMER OF WARRANTIES AND LIMITATION OF LIABILITY AS PART OF A BARGAIN WITH RESPECT TO THE PRICING OF THE PRODUCT AND UNDERSTANDS THAT THE PRICING WOULD BE HIGHER IF RWAI WERE REQUIRED TO BEAR LIABILITY IN EXCESS OF THAT STATED HEREIN. RWAI neither assumes nor authorizes any person, firm or enty to assume for it any other addional liability or r esponsibility in connecon with the Product, including any affirmaon, r epresentaon, or w arranty concerning the Product made by an agent, employee, or representav e of RWAI, unless the affirmaon, r epresentaon, or w arranty is specifically included with this Limited Warranty Statement.

Some jurisdicons do not allo w limitaons on the dur aon of implied w arranes and/or do not allow the exclusion or limitaon of inciden tal or consequenal damages. If such laws govern this Limited Warranty Statement, the above limitaons and e xclusions shall apply to the fullest extent permi ed by law in the applicable jurisdicon.

This Limited Warranty Statement sets out specific legal rights. The Customer may have other rights which vary from jurisdicon t o jurisdicon.

Kirk's Automotive Inc.

Item: **DPF Filter**

Attachments

Request For Approved Equals RoadWarrior.pdf

Request for Approved Equals for DPF's & DOC's Manufactured by:

ROADWARRIOR

Requested By:

Kirk's Automotive, Inc.
9330 Roselawn, St.
Detroit, MI 48204
800-321-5989
www.Kirksonline.net

Kirk's Automotive, Inc. is requesting that DCTA approve the following RoadWarrior manufactured products as approved equals for the Item numbers listed below for this Solicitation as well as future bids at DCTA.

Item #	OEM Part No.	Proposed Approved Equal Manufacturer and Part No.
20-13-01-18 20-13-01-20	2871462	RoadWarrior Part No. C0098-SA
20-13-01-19	2871571	RoadWarrior Part No. C0180-ID
20-13-01-21	2880589NX	RoadWarrior Part No. C0142-ID
20-13-01-22	5295605NX	RoadWarrior Part No. C0153-SA
20-13-01-23	4965244	RoadWarrior Part No. COOO4-SA
20-13-01-24	5287191NX	RoadWarrior Part No. C0028-ID

L. Delivery Schedules

RoadWarrior DPF's, DOC's, Gaskets and Clamps will be shipped from the Dallas RoadWarrior warehouse for delivery within one business day.

In support of these requests, enclosed are specifications, a DPF Regeneration Analysis, an Engineering Assessment of RoadWarrior DPF's, and RoadWarrior's Warranty Policy.

ROADWARRIOR™

ABOUT PARTS LIST RESOURCES CONTACT US

Warranty Informaon

LIMITED WARRANTY for Roadwarrior® DPFs and DOCs

Roadwarrior America Inc. ("**RWAI**") warrants that the Roadwarrior® diesel parcula te filters (DPFs) and diesel oxidaon c atalysts (DOCs)(the "**Product**") furnished by RWAI to its customers (the "**Customers**") are free from defects in materials and workmanship. The foregoing warranes (c ollecv ely, the "**Warranty**") are subject to the terms and condions c ontained in this Limited Warranty Statement and shall be in force and effect for a period of twelve (12) months a. er the date of RWAI shipment of the Product to the Customer (the "**Warranty Period**"). Upon expiraon of the W arranty Period, all liability of RWAI in respect of the Warranty shall terminate.

The Warranty does not cover Customer negligence or willful damage or cosmec damage to the Product; nor does it cover damage to or replacement of consumables used by the Customer in the operaon of the Pr oduct, including, without limitaon, g askets, hoses, fings, pr essure sensors, temperature sensors and batteries. RWAI expressly disclaims liability for these events and categories of damage.

The Warranty is condional upon s trict compliance with the operaon and maintenance of the vehicle and Product in accordance with the procedures specified by the vehicle OEM.A Warranty claim is condional upon the Cus tomer giving RWAI wri en noce within fi een (15) days following the date on which the Customer discovers the Product defect or becomes aware of its non-conformance.

Noce of a W arranty claim shall be sent to RWAI, as follows:

Dentyn County Transportation Authority

Roadwarrior America Inc.
ATTN: Customer Support
12620 FM 1960 W
Ste A4, Box #560
Houston, TX 77065

Email: info@roadwarrior-inc.com
Telephone: 1-877-897-9759

Upon receipt of a Warranty claim, RWAI shall be entled t o request that the Customer return the defecv e Product to RWAI at the above address, freight pre-paid by the Customer. If RWAI in its sole discreon de termines that a site visit is required to evaluate the validity of the Warranty claim, the Customer shall provide reasonable access to the Product wherever located. The Customer shall provide RWAI with a record of the installaon da te of the Product and the mileage accumulated by the vehicle with the Product installed. The Customer obligaons in this par agraph are condions of the W arranty. **Failure of the Customer to meet any of these or other condions specified in the W arranty shall relieve RWAI of all liability under the Warranty.**

Upon determinaon tha t a Warranty claim is valid, RWAI shall at its opon:

(a) replace the Product;
(b) replace the non-performing components of the Product;
(c) make all necessary repairs or modificaons t o the non-performing components of the defecv e Product; or
(d) refund the purchase price of the defecv e Product at the following rates:

0-150,000 miles 100%
150,001-200,000 miles 75%
200,001-250,000 miles 50%
greater than 250,000 miles 25%.

Where applicable, RWAI shall deliver the new or refurbished Product or components to the Customer, freight pre-paid by RWAI. RWAI shall also be responsible for the cost of materials, labor and engineering relang t o the replacement, modificaon and/ or repairs of the Product or components. All other costs of removal and/or re-installaon of the Pr oduct or components associated with RWAI's Warranty services shall be borne by the Customer. If RWAI conducts a site visit to evaluate the Warranty claim, all out-of-pocket costs of such site visit (including travel, accommodaon and meals) shall be borne by RWAI in the event of a valid Warranty claim or by the Customer in the event of an invalid Warranty claim.

RWAI'S TOTAL LIABILITY UNDER THE WARRANTY SHALL IN NO CASE EXCEED THE ACTUAL MONEY PAID BY THE CUSTOMER FOR THE PRODUCT WHICH GIVES RISE TO THE LIABILITY. IN NO EVENT WILL RWAI AND ITS OFFICERS, DIRECTORS, AGENTS AND EMPLOYEES BE LIABLE FOR INCIDENTAL, INDIRECT, SPECIAL OR CONSEQUENTIAL DAMAGES (EVEN IF RWAI HAS BEEN ADVISED OF THE POSSIBILITY THEREOF) INCLUDING, WITHOUT LIMITATION, LOST PROFITS, LOST BUSINESS REVENUE, OTHER COMMERCIAL OR ECONOMIC LOSS OF ANY KIND OR ANY CLAIM AGAINST THE CUSTOMER BY A THIRD PARTY IRRESPECTIVE OF THE NATURE OF THE CAUSE OF ACTION INCLUDING, WITHOUT LIMITATION, BREACH OF CONTRACT OR TORT. IN NO EVENT SHALL RWAI BE LIABLE FOR THE COST OF PROCUREMENT OF SUBSTITUTE PRODUCTS.

THE WARRANTY IN THIS LIMITED WARRANTY STATEMENT IS EXCLUSIVE AND IN LIEU OF ALL OTHER EXPRESS OR IMPLIED WARRANTIES OR CONDITIONS IN RESPECT OF THE PRODUCT, INCLUDING, WITHOUT LIMITATION, ALL IMPLIED WARRANTIES OF MERCHANTABILITY, FITNESS FOR A PARTICULAR PURPOSE, TITLE OR INFRINGEMENT OF INTELLECTUAL PROPERTY RIGHTS THE REMEDIES PROVIDED IN THIS LIMITED WARRANTY STATEMENT ARE THE CUSTOMER'S SOLE REMEDIES FOR ANY FAILURE OF RWAI TO COMPLY WITH ITS WARRANTY OBLIGATIONS. SOME JURISDICTIONS DO NOT ALLOW THE EXCLUSION OF IMPLIED WARRANTIES. IF SUCH LAWS APPLY, THEN ALL EXPRESS AND IMPLIED WARRANTIES ARE LIMITED TO THE WARRANTY PERIOD SET OUT ABOVE. THE CUSTOMER HAS ACCEPTED THE ABOVE DISCLAIMER OF WARRANTIES AND LIMITATION OF LIABILITY AS PART OF A BARGAIN WITH RESPECT TO THE PRICING OF THE PRODUCT AND UNDERSTANDS THAT THE PRICING WOULD BE HIGHER IF RWAI WERE REQUIRED TO BEAR LIABILITY IN EXCESS OF THAT STATED HEREIN. RWAI neither assumes nor authorizes any person, firm or enty to assume for it any other addional liability or r esponsibility in connecon with the Product, including any affirmaon, r epresentaon, or w arranty concerning the Product made by an agent, employee, or representav e of RWAI, unless the affirmaon, r epresentaon, or w arranty is specifically included with this Limited Warranty Statement.

Some jurisdicons do not allo w limitaons on the dur aon of implied w arranes and/or do not allow the exclusion or limitaon of inciden tal or consequenal damages. If such laws govern this Limited Warranty Statement, the above limitaons and e xclusions shall apply to the fullest extent permi ed by law in the applicable jurisdicon.

This Limited Warranty Statement sets out specific legal rights. The Customer may have other rights which vary from jurisdicon t o jurisdicon.

Kirk's Automotive Inc.

Item: **DPF Filter**

Attachments

Request For Approved Equals RoadWarrior.pdf

Request for Approved Equals for DPF's & DOC's Manufactured by:

ROADWARRIOR

Requested By:

Kirk's Automotive, Inc.
9330 Roselawn, St.
Detroit, MI 48204
800-321-5989
www.Kirksonline.net

Kirk's Automotive, Inc. is requesting that DCTA approve the following RoadWarrior manufactured products as approved equals for the Item numbers listed below for this Solicitation as well as future bids at DCTA.

Item #	OEM Part No.	Proposed Approved Equal Manufacturer and Part No.
20-13-01-18 20-13-01-20	2871462	RoadWarrior Part No. C0098-SA
20-13-01-19	2871571	RoadWarrior Part No. C0180-ID
20-13-01-21	2880589NX	RoadWarrior Part No. C0142-ID
20-13-01-22	5295605NX	RoadWarrior Part No. C0153-SA
20-13-01-23	4965244	RoadWarrior Part No. COOO4-SA
20-13-01-24	5287191NX	RoadWarrior Part No. C0028-ID

L. Delivery Schedules

RoadWarrior DPF's, DOC's, Gaskets and Clamps will be shipped from the Dallas RoadWarrior warehouse for delivery within one business day.

In support of these requests, enclosed are specifications, a DPF Regeneration Analysis, an Engineering Assessment of RoadWarrior DPF's, and RoadWarrior's Warranty Policy.

ROADWARRIOR™

ABOUT PARTS LIST RESOURCES CONTACT US

Warranty Informaon

LIMITED WARRANTY for Roadwarrior® DPFs and DOCs

Roadwarrior America Inc. ("**RWAI**") warrants that the Roadwarrior® diesel parcula te filters (DPFs) and diesel oxidaon c atalysts (DOCs)(the "**Product**") furnished by RWAI to its customers (the "**Customers**") are free from defects in materials and workmanship. The foregoing warranes (c ollecv ely, the "**Warranty**") are subject to the terms and condions c ontained in this Limited Warranty Statement and shall be in force and effect for a period of twelve (12) months a. er the date of RWAI shipment of the Product to the Customer (the "**Warranty Period**"). Upon expiraon of the W arranty Period, all liability of RWAI in respect of the Warranty shall terminate.

The Warranty does not cover Customer negligence or willful damage or cosmec damage to the Product; nor does it cover damage to or replacement of consumables used by the Customer in the operaon of the Pr oduct, including, without limitaon, g askets, hoses, fings, pr essure sensors, temperature sensors and batteries. RWAI expressly disclaims liability for these events and categories of damage.

The Warranty is condional upon s trict compliance with the operaon and maintenance of the vehicle and Product in accordance with the procedures specified by the vehicle OEM.A Warranty claim is condional upon the Cus tomer giving RWAI wri en noce within fi een (15) days following the date on which the Customer discovers the Product defect or becomes aware of its non-conformance.

Noce of a W arranty claim shall be sent to RWAI, as follows:

Roadwarrior America Inc.
ATTN: Customer Support
12620 FM 1960 W
Ste A4, Box #560
Houston, TX 77065

Email: info@roadwarrior-inc.com
Telephone: 1-877-897-9759

Upon receipt of a Warranty claim, RWAI shall be entled t o request that the Customer return the defecv e Product to RWAI at the above address, freight pre-paid by the Customer. If RWAI in its sole discreon de termines that a site visit is required to evaluate the validity of the Warranty claim, the Customer shall provide reasonable access to the Product wherever located. The Customer shall provide RWAI with a record of the installaon da te of the Product and the mileage accumulated by the vehicle with the Product installed. The Customer obligaons in this par agraph are condions of the W arranty. **Failure of the Customer to meet any of these or other condions specified in the W arranty shall relieve RWAI of all liability under the Warranty.**

Upon determinaon tha t a Warranty claim is valid, RWAI shall at its opon:

(a) replace the Product;
(b) replace the non-performing components of the Product;
(c) make all necessary repairs or modificaons t o the non-performing components of the defecv e Product; or
(d) refund the purchase price of the defecv e Product at the following rates:

0-150,000 miles 100%
150,001-200,000 miles 75%
200,001-250,000 miles 50%
greater than 250,000 miles 25%.

Where applicable, RWAI shall deliver the new or refurbished Product or components to the Customer, freight pre-paid by RWAI. RWAI shall also be responsible for the cost of materials, labor and engineering relang t o the replacement, modificaon and/ or repairs of the Product or components. All other costs of removal and/or re-installaon of the Pr oduct or components associated with RWAI's Warranty services shall be borne by the Customer. If RWAI conducts a site visit to evaluate the Warranty claim, all out-of-pocket costs of such site visit (including travel, accommodaon and meals) shall be borne by RWAI in the event of a valid Warranty claim or by the Customer in the event of an invalid Warranty claim.

RWAI'S TOTAL LIABILITY UNDER THE WARRANTY SHALL IN NO CASE EXCEED THE ACTUAL MONEY PAID BY THE CUSTOMER FOR THE PRODUCT WHICH GIVES RISE TO THE LIABILITY. IN NO EVENT WILL RWAI AND ITS OFFICERS, DIRECTORS, AGENTS AND EMPLOYEES BE LIABLE FOR INCIDENTAL, INDIRECT, SPECIAL OR CONSEQUENTIAL DAMAGES (EVEN IF RWAI HAS BEEN ADVISED OF THE POSSIBILITY THEREOF) INCLUDING, WITHOUT LIMITATION, LOST PROFITS, LOST BUSINESS REVENUE, OTHER COMMERCIAL OR ECONOMIC LOSS OF ANY KIND OR ANY CLAIM AGAINST THE CUSTOMER BY A THIRD PARTY IRRESPECTIVE OF THE NATURE OF THE CAUSE OF ACTION INCLUDING, WITHOUT LIMITATION, BREACH OF CONTRACT OR TORT. IN NO EVENT SHALL RWAI BE LIABLE FOR THE COST OF PROCUREMENT OF SUBSTITUTE PRODUCTS.

THE WARRANTY IN THIS LIMITED WARRANTY STATEMENT IS EXCLUSIVE AND IN LIEU OF ALL OTHER EXPRESS OR IMPLIED WARRANTIES OR CONDITIONS IN RESPECT OF THE PRODUCT, INCLUDING, WITHOUT LIMITATION, ALL IMPLIED WARRANTIES OF MERCHANTABILITY, FITNESS FOR A PARTICULAR PURPOSE, TITLE OR INFRINGEMENT OF INTELLECTUAL PROPERTY RIGHTS THE REMEDIES PROVIDED IN THIS LIMITED WARRANTY STATEMENT ARE THE CUSTOMER'S SOLE REMEDIES FOR ANY FAILURE OF RWAI TO COMPLY WITH ITS WARRANTY OBLIGATIONS. SOME JURISDICTIONS DO NOT ALLOW THE EXCLUSION OF IMPLIED WARRANTIES. IF SUCH LAWS APPLY, THEN ALL EXPRESS AND IMPLIED WARRANTIES ARE LIMITED TO THE WARRANTY PERIOD SET OUT ABOVE. THE CUSTOMER HAS ACCEPTED THE ABOVE DISCLAIMER OF WARRANTIES AND LIMITATION OF LIABILITY AS PART OF A BARGAIN WITH RESPECT TO THE PRICING OF THE PRODUCT AND UNDERSTANDS THAT THE PRICING WOULD BE HIGHER IF RWAI WERE REQUIRED TO BEAR LIABILITY IN EXCESS OF THAT STATED HEREIN. RWAI neither assumes nor authorizes any person, firm or enty to assume for it any other addional liability or r esponsibility in connecon with the Product, including any affirmaon, r epresentaon, or w arranty concerning the Product made by an agent, employee, or representav e of RWAI, unless the affirmaon, r epresentaon, or w arranty is specifically included with this Limited Warranty Statement.

Some jurisdicons do not allo w limitaons on the dur aon of implied w arranes and/or do not allow the exclusion or limitaon of inciden tal or consequenal damages. If such laws govern this Limited Warranty Statement, the above limitaons and e xclusions shall apply to the fullest extent permi ed by law in the applicable jurisdicon.

This Limited Warranty Statement sets out specific legal rights. The Customer may have other rights which vary from jurisdicon t o jurisdicon.

Kirk's Automotive Inc.

Item: **DPF Filter**

Attachments

Request For Approved Equals RoadWarrior.pdf

Request for Approved Equals for DPF's & DOC's Manufactured by:

ROADWARRIOR

Requested By:

Kirk's Automotive, Inc.
9330 Roselawn, St.
Detroit, MI 48204
800-321-5989
www.Kirksonline.net

Kirk's Automotive, Inc. is requesting that DCTA approve the following RoadWarrior manufactured products as approved equals for the Item numbers listed below for this Solicitation as well as future bids at DCTA.

Item #	OEM Part No.	Proposed Approved Equal Manufacturer and Part No.
20-13-01-18 20-13-01-20	2871462	RoadWarrior Part No. C0098-SA
20-13-01-19	2871571	RoadWarrior Part No. C0180-ID
20-13-01-21	2880589NX	RoadWarrior Part No. C0142-ID
20-13-01-22	5295605NX	RoadWarrior Part No. C0153-SA
20-13-01-23	4965244	RoadWarrior Part No. COOO4-SA
20-13-01-24	5287191NX	RoadWarrior Part No. C0028-ID

L. Delivery Schedules
RoadWarrior DPF's, DOC's, Gaskets and Clamps will be shipped from the Dallas RoadWarrior warehouse for delivery within one business day.

In support of these requests, enclosed are specifications, a DPF Regeneration Analysis, an Engineering Assessment of RoadWarrior DPF's, and RoadWarrior's Warranty Policy.

Warranty Informaon

LIMITED WARRANTY for Roadwarrior® DPFs and DOCs

Roadwarrior America Inc. ("**RWAI**") warrants that the Roadwarrior® diesel parcula te filters (DPFs) and diesel oxidaon c atalysts (DOCs)(the "**Product**") furnished by RWAI to its customers (the "**Customers**") are free from defects in materials and workmanship. The foregoing warranes (c ollecv ely, the "**Warranty**") are subject to the terms and condions c ontained in this Limited Warranty Statement and shall be in force and effect for a period of twelve (12) months a. er the date of RWAI shipment of the Product to the Customer (the "**Warranty Period**"). Upon expiraon of the W arranty Period, all liability of RWAI in respect of the Warranty shall terminate.

The Warranty does not cover Customer negligence or willful damage or cosmec damage to the Product; nor does it cover damage to or replacement of consumables used by the Customer in the operaon of the Pr oduct, including, without limitaon, g askets, hoses, fings, pr essure sensors, temperature sensors and batteries. RWAI expressly disclaims liability for these events and categories of damage.

The Warranty is condional upon s trict compliance with the operaon and maintenance of the vehicle and Product in accordance with the procedures specified by the vehicle OEM.A Warranty claim is condional upon the Cus tomer giving RWAI wri en noce within fi een (15) days following the date on which the Customer discovers the Product defect or becomes aware of its non-conformance.

Noce of a W arranty claim shall be sent to RWAI, as follows:

Dallas Area Rapid Transit
Transportation Authority

Roadwarrior America Inc.
ATTN: Customer Support
12620 FM 1960 W
Ste A4, Box #560
Houston, TX 77065

Email: info@roadwarrior-inc.com
Telephone: 1-877-897-9759

Upon receipt of a Warranty claim, RWAI shall be entled t o request that the Customer return the defecv e Product to RWAI at the above address, freight pre-paid by the Customer. If RWAI in its sole discreon de termines that a site visit is required to evaluate the validity of the Warranty claim, the Customer shall provide reasonable access to the Product wherever located. The Customer shall provide RWAI with a record of the installaon da te of the Product and the mileage accumulated by the vehicle with the Product installed. The Customer obligaons in this par agraph are condions of the W arranty. **Failure of the Customer to meet any of these or other condions specified in the W arranty shall relieve RWAI of all liability under the Warranty.**

Upon determinaon tha t a Warranty claim is valid, RWAI shall at its opon:

(a) replace the Product;
(b) replace the non-performing components of the Product;
(c) make all necessary repairs or modificaons t o the non-performing components of the defecv e Product; or
(d) refund the purchase price of the defecv e Product at the following rates:

0-150,000 miles 100%
150,001-200,000 miles 75%
200,001-250,000 miles 50%
greater than 250,000 miles 25%.

Where applicable, RWAI shall deliver the new or refurbished Product or components to the Customer, freight pre-paid by RWAI. RWAI shall also be responsible for the cost of materials, labor and engineering relang t o the replacement, modificaon and/ or repairs of the Product or components. All other costs of removal and/or re-installaon of the Pr oduct or components associated with RWAI's Warranty services shall be borne by the Customer. If RWAI conducts a site visit to evaluate the Warranty claim, all out-of-pocket costs of such site visit (including travel, accommodaon and meals) shall be borne by RWAI in the event of a valid Warranty claim or by the Customer in the event of an invalid Warranty claim.

RWAI'S TOTAL LIABILITY UNDER THE WARRANTY SHALL IN NO CASE EXCEED THE ACTUAL MONEY PAID BY THE CUSTOMER FOR THE PRODUCT WHICH GIVES RISE TO THE LIABILITY. IN NO EVENT WILL RWAI AND ITS OFFICERS, DIRECTORS, AGENTS AND EMPLOYEES BE LIABLE FOR INCIDENTAL, INDIRECT, SPECIAL OR CONSEQUENTIAL DAMAGES (EVEN IF RWAI HAS BEEN ADVISED OF THE POSSIBILITY THEREOF) INCLUDING, WITHOUT LIMITATION, LOST PROFITS, LOST BUSINESS REVENUE, OTHER COMMERCIAL OR ECONOMIC LOSS OF ANY KIND OR ANY CLAIM AGAINST THE CUSTOMER BY A THIRD PARTY IRRESPECTIVE OF THE NATURE OF THE CAUSE OF ACTION INCLUDING, WITHOUT LIMITATION, BREACH OF CONTRACT OR TORT. IN NO EVENT SHALL RWAI BE LIABLE FOR THE COST OF PROCUREMENT OF SUBSTITUTE PRODUCTS.

THE WARRANTY IN THIS LIMITED WARRANTY STATEMENT IS EXCLUSIVE AND IN LIEU OF ALL OTHER EXPRESS OR IMPLIED WARRANTIES OR CONDITIONS IN RESPECT OF THE PRODUCT, INCLUDING, WITHOUT LIMITATION, ALL IMPLIED WARRANTIES OF MERCHANTABILITY, FITNESS FOR A PARTICULAR PURPOSE, TITLE OR INFRINGEMENT OF INTELLECTUAL PROPERTY RIGHTS THE REMEDIES PROVIDED IN THIS LIMITED WARRANTY STATEMENT ARE THE CUSTOMER'S SOLE REMEDIES FOR ANY FAILURE OF RWAI TO COMPLY WITH ITS WARRANTY OBLIGATIONS. SOME JURISDICTIONS DO NOT ALLOW THE EXCLUSION OF IMPLIED WARRANTIES. IF SUCH LAWS APPLY, THEN ALL EXPRESS AND IMPLIED WARRANTIES ARE LIMITED TO THE WARRANTY PERIOD SET OUT ABOVE. THE CUSTOMER HAS ACCEPTED THE ABOVE DISCLAIMER OF WARRANTIES AND LIMITATION OF LIABILITY AS PART OF A BARGAIN WITH RESPECT TO THE PRICING OF THE PRODUCT AND UNDERSTANDS THAT THE PRICING WOULD BE HIGHER IF RWAI WERE REQUIRED TO BEAR LIABILITY IN EXCESS OF THAT STATED HEREIN. RWAI neither assumes nor authorizes any person, firm or enty to assume for it any other addional liability or r esponsibility in connecon with the Product, including any affirmaon, r epresentaon, or w arranty concerning the Product made by an agent, employee, or representav e of RWAI, unless the affirmaon, r epresentaon, or w arranty is specifically included with this Limited Warranty Statement.

Some jurisdicons do not allo w limitaons on the dur aon of implied w arranes and/or do not allow the exclusion or limitaon of inciden tal or consequenal damages. If such laws govern this Limited Warranty Statement, the above limitaons and e xclusions shall apply to the fullest extent permi ed by law in the applicable jurisdicon.

This Limited Warranty Statement sets out specific legal rights. The Customer may have other rights which vary from jurisdicon t o jurisdicon.

Kirk's Automotive Inc.

Item: **DPF Filter**

Attachments

Request For Approved Equals RoadWarrior.pdf

Request for Approved Equals for DPF's & DOC's Manufactured by:

ROADWARRIOR

Requested By:

Kirk's Automotive, Inc.
9330 Roselawn, St.
Detroit, MI 48204
800-321-5989
www.Kirksonline.net

Kirk's Automotive, Inc. is requesting that DCTA approve the following RoadWarrior manufactured products as approved equals for the Item numbers listed below for this Solicitation as well as future bids at DCTA.

Item #	OEM Part No.	Proposed Approved Equal Manufacturer and Part No.
20-13-01-18 20-13-01-20	2871462	RoadWarrior Part No. C0098-SA
20-13-01-19	2871571	RoadWarrior Part No. C0180-ID
20-13-01-21	2880589NX	RoadWarrior Part No. C0142-ID
20-13-01-22	5295605NX	RoadWarrior Part No. C0153-SA
20-13-01-23	4965244	RoadWarrior Part No. COOO4-SA
20-13-01-24	5287191NX	RoadWarrior Part No. C0028-ID

L. Delivery Schedules

RoadWarrior DPF's, DOC's, Gaskets and Clamps will be shipped from the Dallas RoadWarrior warehouse for delivery within one business day.

In support of these requests, enclosed are specifications, a DPF Regeneration Analysis, an Engineering Assessment of RoadWarrior DPF's, and RoadWarrior's Warranty Policy.

ROADWARRIOR™

ABOUT PARTS LIST RESOURCES CONTACT US

Warranty Informaon

LIMITED WARRANTY for Roadwarrior® DPFs and DOCs

Roadwarrior America Inc. ("**RWAI**") warrants that the Roadwarrior® diesel parcula te filters (DPFs) and diesel oxidaon c atalysts (DOCs)(the "**Product**") furnished by RWAI to its customers (the "**Customers**") are free from defects in materials and workmanship. The foregoing warranes (c ollecv ely, the "**Warranty**") are subject to the terms and condions c ontained in this Limited Warranty Statement and shall be in force and effect for a period of twelve (12) months a. er the date of RWAI shipment of the Product to the Customer (the "**Warranty Period**"). Upon expiraon of the W arranty Period, all liability of RWAI in respect of the Warranty shall terminate.

The Warranty does not cover Customer negligence or willful damage or cosmec damage to the Product; nor does it cover damage to or replacement of consumables used by the Customer in the operaon of the Pr oduct, including, without limitaon, g askets, hoses, fings, pr essure sensors, temperature sensors and batteries. RWAI expressly disclaims liability for these events and categories of damage.

The Warranty is condional upon s trict compliance with the operaon and maintenance of the vehicle and Product in accordance with the procedures specified by the vehicle OEM.A Warranty claim is condional upon the Cus tomer giving RWAI wri en noce within fi een (15) days following the date on which the Customer discovers the Product defect or becomes aware of its non-conformance.

Noce of a W arranty claim shall be sent to RWAI, as follows:

Roadwarrior America Inc.
ATTN: Customer Support
12620 FM 1960 W
Ste A4, Box #560
Houston, TX 77065

Email: info@roadwarrior-inc.com
Telephone: 1-877-897-9759

Upon receipt of a Warranty claim, RWAI shall be entled t o request that the Customer return the defecv e Product to RWAI at the above address, freight pre-paid by the Customer. If RWAI in its sole discreon de termines that a site visit is required to evaluate the validity of the Warranty claim, the Customer shall provide reasonable access to the Product wherever located. The Customer shall provide RWAI with a record of the installaon da te of the Product and the mileage accumulated by the vehicle with the Product installed. The Customer obligaons in this par agraph are condions of the W arranty. **Failure of the Customer to meet any of these or other condions specified in the W arranty shall relieve RWAI of all liability under the Warranty.**

Upon determinaon tha t a Warranty claim is valid, RWAI shall at its opon:

(a) replace the Product;
(b) replace the non-performing components of the Product;
(c) make all necessary repairs or modificaons t o the non-performing components of the defecv e Product; or
(d) refund the purchase price of the defecv e Product at the following rates:

0-150,000 miles 100%
150,001-200,000 miles 75%
200,001-250,000 miles 50%
greater than 250,000 miles 25%.

Where applicable, RWAI shall deliver the new or refurbished Product or components to the Customer, freight pre-paid by RWAI. RWAI shall also be responsible for the cost of materials, labor and engineering relang t o the replacement, modificaon and/ or repairs of the Product or components. All other costs of removal and/or re-installaon of the Pr oduct or components associated with RWAI's Warranty services shall be borne by the Customer. If RWAI conducts a site visit to evaluate the Warranty claim, all out-of-pocket costs of such site visit (including travel, accommodaon and meals) shall be borne by RWAI in the event of a valid Warranty claim or by the Customer in the event of an invalid Warranty claim.

RWAI'S TOTAL LIABILITY UNDER THE WARRANTY SHALL IN NO CASE EXCEED THE ACTUAL MONEY PAID BY THE CUSTOMER FOR THE PRODUCT WHICH GIVES RISE TO THE LIABILITY. IN NO EVENT WILL RWAI AND ITS OFFICERS, DIRECTORS, AGENTS AND EMPLOYEES BE LIABLE FOR INCIDENTAL, INDIRECT, SPECIAL OR CONSEQUENTIAL DAMAGES (EVEN IF RWAI HAS BEEN ADVISED OF THE POSSIBILITY THEREOF) INCLUDING, WITHOUT LIMITATION, LOST PROFITS, LOST BUSINESS REVENUE, OTHER COMMERCIAL OR ECONOMIC LOSS OF ANY KIND OR ANY CLAIM AGAINST THE CUSTOMER BY A THIRD PARTY IRRESPECTIVE OF THE NATURE OF THE CAUSE OF ACTION INCLUDING, WITHOUT LIMITATION, BREACH OF CONTRACT OR TORT. IN NO EVENT SHALL RWAI BE LIABLE FOR THE COST OF PROCUREMENT OF SUBSTITUTE PRODUCTS.

THE WARRANTY IN THIS LIMITED WARRANTY STATEMENT IS EXCLUSIVE AND IN LIEU OF ALL OTHER EXPRESS OR IMPLIED WARRANTIES OR CONDITIONS IN RESPECT OF THE PRODUCT, INCLUDING, WITHOUT LIMITATION, ALL IMPLIED WARRANTIES OF MERCHANTABILITY, FITNESS FOR A PARTICULAR PURPOSE, TITLE OR INFRINGEMENT OF INTELLECTUAL PROPERTY RIGHTS THE REMEDIES PROVIDED IN THIS LIMITED WARRANTY STATEMENT ARE THE CUSTOMER'S SOLE REMEDIES FOR ANY FAILURE OF RWAI TO COMPLY WITH ITS WARRANTY OBLIGATIONS. SOME JURISDICTIONS DO NOT ALLOW THE EXCLUSION OF IMPLIED WARRANTIES. IF SUCH LAWS APPLY, THEN ALL EXPRESS AND IMPLIED WARRANTIES ARE LIMITED TO THE WARRANTY PERIOD SET OUT ABOVE. THE CUSTOMER HAS ACCEPTED THE ABOVE DISCLAIMER OF WARRANTIES AND LIMITATION OF LIABILITY AS PART OF A BARGAIN WITH RESPECT TO THE PRICING OF THE PRODUCT AND UNDERSTANDS THAT THE PRICING WOULD BE HIGHER IF RWAI WERE REQUIRED TO BEAR LIABILITY IN EXCESS OF THAT STATED HEREIN. RWAI neither assumes nor authorizes any person, firm or enty to assume for it any other addional liability or r esponsibility in connecon with the Product, including any affirmaon, r epresentaon, or w arranty concerning the Product made by an agent, employee, or representav e of RWAI, unless the affirmaon, r epresentaon, or w arranty is specifically included with this Limited Warranty Statement.

Some jurisdicons do not allo w limitaons on the dur aon of implied w arranes and/or do not allow the exclusion or limitaon of inciden tal or consequenal damages. If such laws govern this Limited Warranty Statement, the above limitaons and e xclusions shall apply to the fullest extent permi ed by law in the applicable jurisdicon.

This Limited Warranty Statement sets out specific legal rights. The Customer may have other rights which vary from jurisdicon t o jurisdicon.

Kirk's Automotive Inc.

Item: **GASKET, OIL PAN**

Attachments

Request For Approved Equals ISM.pdf

Request for Approved Equals
Solicitation 20-13
Cummins Auto Parts Bid

Item Number 20-13-01-09
Champion Number 4896897
Description: GASKET AIR COMP
Approved Equal Part Number: ISM M-4896797

Item Number 20-13-01-10
Gillig Number 4932615
Description: GASKET EGR TUBE
Approved Equal Part Number: ISM M-4932615

Item Number 20-13-01-35
Gillig Number 3930408
Description: GASKET OIL PAN
Approved Equal Part Number: ISM M-3930408

Exception to L. Delivery Schedules - NAPA parts will be delivered in three (3) to four (4) business days.

Requested By:
Kirk's Automotive, Inc.
9330 Roselawn, St.
Detroit, MI 48204
800-321-5989

Interstate McBee Company History

Interstate Diesel Service, founded in 1947, specialized in remanufacturing Detroit Diesel® fuel injectors. In the 1950's the company expanded into manufacturing a variety of fuel injection components, in collaboration with a number of Original Equipment Manufacturers (OEMs) such as Diamond Rio®, GMC Truck & Coach®, International Harvester®, White Motors®, Allis-Chalmers® and others. During this time, Interstate Diesel gained the reputation as one of the world's premier remanufacturers for fuel injection components.

In the 1970's McBee Supply was established to service the heavy duty engine aftermarket with replacement components for Cummins engine applications. In the 1980's McBee Supply expanded coverage to include replacement parts for Caterpillar®, Detroit Diesel® and Navistar® engine applications.

Since the 1990's, Interstate Diesel designed, patented and marketed a variety of revolutionary fuel injection components. "ECOTIP" technology for EMD engine applications is an example of one of these components. This technology dramatically reduces exhaust particulates and significantly improves fuel economy for rail, marine, power and industrial applications. In 1997, Interstate Diesel added Electro-Motive Diesel® to the list of OEM's serviced.

In 1999 Interstate-McBee invested in equipment and personnel to manufacture our own brand of engine gaskets and gasket kits. Today we manufacture over 2700 individual gaskets and assemble more than 3,000 gasket kits for Caterpillar®, Cummins®, Detroit Diesel®, and Navistar® engine applications.

In 2008, with the rapid expansion of the business, McBee Supply moved into an independent , dedicated distribution facility in Cleveland. With more space at the manufacturing facility Interstate-McBee created two engine test cells to validate new products prior to launch. These test cells allow testing of engines up to 2,000HP.

ISO/Quality

Interstate-McBee maintains a Quality Management System that conforms to the ISO 9001:2015 with Design Standard. This is achieved by maintaining a Quality Management System at all locations that conforms to the ISO 9001:2015 with Design Standard. See Attached Certificate.

Attached is Interstate Mc-Bee's Warranty Policy

We look forward to UTA's approval of the proposed equal products, and please contact Mr. Robert Bruhn with any questions or requests for additional information.

SMITHERS
QUALITY ASSESSMENTS

CERTIFICATE OF APPROVAL

This is to Certify that the Quality Management System of:

Interstate Diesel-McBee

4901 Lakeside Avenue
Cleveland, OH 44114

(Page 1 of 2; see Appendix)

has been assessed and approved by Smithers Quality Assessments, Inc., to the following quality management system standards and requirements:

ISO 9001:2015 with Design

The Quality Management System is Applicable to:

The design and manufacturing and remanufacturing and distribution of diesel fuel system components for diesel engine parts.

Approval
Certificate Number: 98.085

Original Approval: March 26, 1998

Current Certificate: March 15, 2019

Certificate Expires: March 14, 2022

The use of the accreditation mark indicates accreditation in respect of those activities covered by the above certificate number.

on behalf of SQA - J. Michael Hochschwender, CEO

The approval is subject to the company maintaining its system to the required standards which will be monitored by Smithers Quality Assessments, Inc., 121 S. Main St. Suite 300, Akron, Ohio 44308, USA

ANAB ACCREDITED ISO/IEC 17021 MANAGEMENT SYSTEMS CERTIFICATION BODY

Form SQA-13.1c.2015| ISO Appendix | Revised: 12/01/15 | (4035-Q-298) – Single Site, Current Certificate Revision Date: 02/08/2019

APPENDIX A
TO THE CERTIFICATE
OF REGISTRATION NO. 98.085

SMITHERS QUALITY ASSESSMENTS, INC.

Site:

Interstate Diesel-McBee
4901 Lakeside Avenue
Cleveland, OH 44114
Scope of services provided by this location: Design, manufacturing, remanufacturing, and distribution.

Support Location:

Interstate Diesel-McBee
5300 Lakeside Avenue
Cleveland, OH 44114
Scope of services provided by this location: Sales, purchasing, limited manufacturing, inbound, outbound, picnpac, kitting.

Interstate Diesel-McBee
13137 Arctic Circle
Santa Fe Springs, CA 90670

Interstate Diesel-McBee
9955 NW 58th Street
Doral, FL 33178

Interstate Diesel-McBee
1755 Transcentral Court #200
Houston, TX 77032

Scope of services provided by these locations: Customer service and distribution.

Applicable Standard: ISO 9001:2015 with Design

This appendix applies only to those sites listed above. As other sites are assessed and approved, or as sites already approved are removed from active services, this appendix will be amended to show the current status. Sites not listed on this appendix shall not be viewed as approved.

ANAB ACCREDITED ISO/IEC 17021 MANAGEMENT SYSTEMS CERTIFICATION BODY

INTERSTATE-McBEE Interstate Diesel Service Inc. McBee Supply Corp.	Title McBee Extended Warranty - Engine Parts	
INSTRUCTION	Q-INT-82-0159	H	Page 1 of 2

COVERAGE

Diesel Engine
New engine parts furnished by Interstate-McBee are warranted to be free from defects in material and workmanship under normal use and service for a period of twenty-four (24) months from the date of installation, without mileage or hour limitation. This warranty applies to all owners in the chain of distribution, i.e. distributor, dealer, original owner, until the end of the respective periods of coverage and shall not apply to subsequent owners.

Natural Gas or Methane Engine and Prime Power Generation
New engine parts furnished by Interstate-McBee are warranted to be free from defects in material and workmanship under normal use and service, for a period of twenty four (24) months from the date of installation with the exception of valve train components which are warranted for twelve (12) months from the date of installation.. This warranty applies to all owners in the chain of distribution, i.e. distributor, dealer, original owner, until the end of the respective periods of coverage and shall not apply to subsequent owners.

INTERSTATE-MCBEE RESPONSIBILITIES
Interstate-McBee will pay only for parts, labor and fluids needed to repair damages directly resulting from an above defined warranty failure to the functional condition existing immediately prior to the failure, including progressive damage to the engine in which the warrantable part was installed, provided Interstate-McBee's inspection of said failed part or parts discloses to our satisfaction to have been defective. Labor cost will be paid but not to exceed published flat rates times at Interstate-McBee's standard hourly rate. No overtime or holiday rates will be allowed. Only new or rebuilt Interstate-McBee or Interstate-McBee approved parts will be used in making the repair.

OWNER'S RESPONSIBILITIES
Owner is responsible for the operation and maintenance of the engine as specified in the APPLICABLE O.E.M. OPERATION AND MAINTENANCE MANUALS. Owner must give notice within (30) days of any suspected failure and before expiration of applicable warranty to be considered warrantable. Owner will provide alleged defective and associated parts for examination by Interstate-McBee and, if requested, return same F.O.B. Cleveland, Ohio. Additionally, a complete Electronic Control Module report must accompany the claim. Interstate-McBee further reserves the right to examine any engine subject to a claim under this warranty. Approved warranty work is to be performed by an authorized Interstate-McBee Distributor or Dealer or other Interstate-McBee approved facility. Copies of all work orders and invoices for repairs to the engine must accompany the claim. Owner is responsible for all costs, including, but not limited to, repairs made to items other than the engine in which the parts are installed, "downtime" expenses and all business costs and losses resulting from a warrantable failure. ALL CLAIMS MUST BE FILED ONLINE AT WWW.INTERSTATE-MCBEE.COM

WARRANTY LIMITATIONS
Interstate-McBee is not responsible for failure resulting from owner or operator abuse or neglect, such as, but not limited to: operation without adequate coolant, fuel or lubricants; over fueling; over speeding; lack of maintenance of lubricating, coolant or air intake systems; improper storage, starting, warm-up, run-in or shut down practices. Interstate-McBee is not responsible for failures resulting from improper repair or installation, for parts that have been altered or for parts not approved by Interstate-McBee. This warranty does not apply to parts furnished on a no charge basis. Interstate-McBee does not warrant parts supplied by Interstate-McBee which bear the name and trademark of another company. These parts are warranted by their manufacturers and not Interstate-McBee.. In no event shall this warranty extend beyond (36) months from the date of sale. THERE ARE NO WARRANTIES EXPRESSED, IMPLIED OR STATUTORY, FOR THE PARTS NAMED HEREIN BEFORE, MADE BY INTERSTATE-MCBEE OTHER THAN SET FORTH HEREIN. We neither assume nor authorize any other persons to assume for us any other liability in connection with our products. INTERSTATE-MCBEE SHALL NOT BE RESPONSIBLE FOR ANY OTHER CONSEQUENTIAL DAMAGES OR CONTINGENT LIABILITIES. Further, in no event shall Intestate-McBee bear any responsibility for any damages, which exceed the then available aggregate coverage provided under the terms and conditions of its product liability policy.

This warranty shall be interpreted, governed and enforced in accordance with the laws of the State of Ohio, U.S.A. (For products not covered herein, see Interstate-McBee's General Product Warranty.) Any actions or proceedings relating to this warranty must be filed or commenced within three (3) months of the alleged breach. If any of these warranty provisions or portions thereof prohibited by law or by any court of competent jurisdiction, in any locality, its invalidity or unenforceability shall not affect the validity or enforceability of any other warranty provisions or portions thereof.

Supplier: **Kirk's Automotive Inc.**

https://

BIDDER'S QUESTIONNAIRE

1. Name of Contractor ("Business", herein)

Kirk's Automotive, Inc.

2. Doing Business As (other business name if applicable)

3. Federal Tax ID Number

38-146-1184

4. Business Mailing Address (include City/State/Zip Code)

9330 Roselawn

5. Business Email Address

rrk@kirksauto.com

6. Business Telephone

3139337030

Business Fax Number

313-933-7030

7. Business Type

Corporation

8. Number of Years in Business

74

9. Annual Gross Revenue for the past three years (M = Millions)

☐ $1M or Less ☐ $1M-$5M ☑ $5M-$10M

☐ $10M-$16M ☐ $16M+

10. Number of Employees

☑ 100 or Less ☐ 101-500 ☐ 501-750

☐ 751-1,000 ☐ 1,001+

11. Is Business a DBE Firm?

☐ Yes ☑ No

12. Is Business Owned by Minority Ethnicity?

☐ Yes ☑ No

13. Ethnic Group

Black American
Hispanic American
Native American
Other
Subcontinent Asian American
White/Caucasian
Asian Pacific American

14. Woman Owned?

☐ Yes ☑ No

15. Veteran Owned

☐ Yes ☑ No

16. Type of Work Performed

☑ Manufacturing ☐ Professional Service

☐ Retail ☐ General/Technical Service

17. Has the Business, or any officer or partner thereof, failed to complete a contract?

☐ Yes ☑ No

18. Has the Bubsiness ever been declared "Not Responsible

19. Is any litigation pending against the Business?

☐ Yes ☑ No

20. Has the Business been debarred, suspended, proposed for debarment, and declared ineligible, voluntarily excluded or otherwise disqualified from bidding, proposing or contracting?

☐ Yes ☑ No

21. Has the Business ever been a defaulter, as principal, surety or otherwise?

☐ Yes ☑ No

22. Has the government or other public entity requested or required enforcement of any of its rights under a surety agreement on the basis of a default or in lieu of declaring the Business in default?

☐ Yes ☑ No

23. Is the Business in arrears upon a contract or debt?

☐ Yes ☑ No

24. Are there any proceedings pending relating to the Business' responsibility, debarment, suspension, voluntary exclusion or qualification to receive a public contract?

☐ Yes ☑ No

25. Have liquidated damages or penalty provisions been assessed against the Business for failure to complete the work on time or for any other reason?

☐ Yes ☑ No

26. If a "yes" response is given to questions 17-25, please provide a detailed explanation including dates, references to contract information, contacts, etc. (attach additional pages as necessary).
DCTA reserves the right to inquire further with respect thereto

27. List the name and business address of each person or each entity which has a 10% or more ownership or control interest in the Business (attach additional pages as necessary).

I, individually and on behalf of the business named above, do by my signature below certify that the information provided in this questionnaire is true and correct. I understand that if the information provided herein contains any false statements or any misrepresentations: 1) DCTA will have the grounds to terminate any or all contracts which DCTA has or may have with the business; 2) DCTA may disqualify the business named above from consideration for contracts and/or 3) DCTA may have grounds for initiating legal action under federal, state or local law. ***Note: This questionnaire is also a certification form; the information requested will be used to determine small business status as per 13 CFR Part 121. Additionally, this information will allow DCTA to report the amount of subcontracting activity for DCTA.***

Printed Name

Robert Kirkman

Title

President

Signature of owner

April 30 / 2020

Date

Denton County
Transportation Authority

☐ Yes ☑ No

rrk@kirksauto.com
Email Address

(Owner, CEO, President, Majority Stockholder or Designated Representative) Questions about this document should be directed to the Procurement Manager

Supplier: **Kirk's Automotive Inc.**

BUY AMERICA CERTIFICATION
(STEEL OR MANUFACTURED PRODUCTS)
[61 FR 6302, Feb. 16, 1996, as amended at 74 FR 30239,
June 25, 2009]

General Requirement (as stated in 49 CFR 661.5)

(a) Except as provided in 49 CFR 661.7 and 49 CFR 661.11, no funds may be obligated by FTA for a grantee project unless all iron, steel, and manufactured products used in the project are produced in the United States.

(b) All steel and iron manufacturing processes must take place in the United States, except metallurgical processes involving refinement of steel additives.

(c) The steel and iron requirements apply to all construction materials made primarily of steel or iron and used in infrastructure projects such as, transit or maintenance facilities, rail lines, and bridges. These items include, but are not limited to, structural steel or iron, steel or iron beams and columns, running rail and contact rail. These requirements do not apply to steel or iron used as components or subcomponents of other manufactured products or rolling stock, or to bimetallic power rail incorporating steel or iron components.

(d) For a manufactured product to be considered produced in the United States:

(1) All of the manufacturing processes for the product must take place in the United States; and

(2) All of the components of the product must be of U.S. origin. A component is considered of U.S. origin if it is manufactured in the United States, regardless of the origin of its subcomponents.

If steel, iron, or manufactured products (as defined in 49 CFR 661.3 and 661.5) are being procured, the appropriate certificate as set forth below shall be completed and submitted by each bidder or offeror in accordance with the requirement contained in 49 CFR 661.13(b).

Certificate of Compliance with Buy America Requirements.
The bidder or offeror hereby certifies that it will comply with the requirements of 49 U.S.C. 5323(j)(1), and the applicable regulations in 49 CFR part 661.

Company

Name	**Robert Kirkman**	Title	**President**
Signature		Date	**April 30 / 2020**

Certificate of Non-Compliance with Buy America Steel or Manufactured Products Requirements The bidder or offeror hereby certifies that it cannot comply with the requirements of 49 U.S.C. 5323(j), but it may qualify for an exception to the requirement pursuant to 49 U.S.C. 5323(j)(2), as amended, and the applicable regulations in 49 C.F.R. 661.7.

Company

Name Title

Signature Date **rrk@kirksauto.com**

Supplier: **Kirk's Automotive Inc.**

Instructions for Certification: By signing and submitting this bid or proposal, the prospective lower tier participant is providing the signed certification set out below.

(1) It will comply and facilitate compliance with U.S. DOT regulations, "Non-procurement Suspension and Debarment," 2 CFR part 1200, which adopts and supplements the U.S. Office of Management and Budget (U.S. OMB) "Guidelines to Agencies on Government-wide Debarment and Suspension (Non-procurement)," 2 CFR part 180,

(2) To the best of its knowledge and belief, that its Principals and Subrecipients at the first tier:

a. Are eligible to participate in covered transactions of any Federal department or agency and are not presently:

(1) Debarred,
(2) Suspended,
(3) Proposed for debarment,
(4) Declared ineligible,
(5) Voluntarily excluded, or
(6) Disqualified,

b. Its management has not within a three-year period preceding its latest application or proposal been convicted of or had a civil judgment rendered against any of them for:

(1) Commission of fraud or a criminal offense in connection with obtaining, attempting to obtain, or performing a public (Federal, State, or local) transaction, or contract under a public transaction,
(2) Violation of any Federal or State antitrust statute, or
(3) Commission of embezzlement, theft, forgery, bribery, falsification or destruction of records, making any false statement, or receiving stolen property,

c. It is not presently indicted for, or otherwise criminally or civilly charged by a governmental entity (Federal, State, or local) with commission of any of the offenses listed in the preceding subsection 2.b of this Certification,

d. It has not had one or more public transactions (Federal, State, or local) terminated for cause or default within a three-year period preceding this Certification,

e. If, at a later time, it receives any information that contradicts the statements of subsections 2.a – 2.d above, it will promptly provide that information to FTA,

f. It will treat each lower tier contract or lower tier subcontract under its Project as a covered lower tier contract for purposes of 2 CFR part 1200 and 2 CFR part 180 if it:

(1) Equals or exceeds $25,000,
(2) Is for audit services, or
(3) Requires the consent of a Federal official, and

g. It will require that each covered lower tier contractor and subcontractor:
(1) Comply and facilitate compliance with the Federal requirements of 2 CFR parts 180 and 1200, and
(2) Assure that each lower tier participant in its Project is not presently declared by any

Federal department or agency to be:

a. Debarred from participation in its federally funded Project,
b. Suspended from participation in its federally funded Project,
c. Proposed for debarment from participation in its federally funded Project,
d. Declared ineligible to participate in its federally funded Project,
e. Voluntarily excluded from participation in its federally funded Project, or
f. Disqualified from participation in its federally funded Project, and

3. It will provide a written explanation as indicated on a page attached in FTA's TEAM-Web or the Signature Page if it or any of its principals, including any of its first tier Subrecipients or its Third Party Participants at a lower tier, is unable to certify compliance with the preceding statements in this Certification Group.

Certification

Contractor **Kirk's Automotive, Inc.**

Name and Title of Contractor's Authorized Official **President**

Signature Date **rrk@kirksauto.com**

Supplier: **Kirk's Automotive Inc.**

CONFLICT OF INTEREST QUESTIONNAIRE

FORM CIQ

For vendor or other person doing business with local governmental entity

This questionnaire is being filed in accordance with chapter 176 of the Local Government Code by a person doing business with the governmental entity.

OFFICE USE ONLY

By law this questionnaire must be filed with the records administrator of the local government not later than the 7th business day after the date the person becomes aware of facts that require the statement to be filed. *See* Section 176.006, Local Government Code.

Date Received

A person commits an offense if the person violates Section 176.006, Local Government Code. An offense under this section is a Class C misdemeanor.

1 Name of person doing business with local governmental entity.

2 ☐ **Check this box if you are filing an update to a previously filed questionnaire.**

(The law requires that you file an updated completed questionnaire with the appropriate filing authority not later than September 1 of the year for which an activity described in Section 176.006(a), Local Government Code, is pending and not later than the 7th business day after the date the originally filed questionnaire becomes incomplete or inaccurate.)

3 Describe each affiliation or business relationship with an employee or contractor of the local governmental entity who makes recommendations to a local government officer of the local governmental entity with respect to expenditure of money.

4 Describe each affiliation or business relationship with a person who is a local government office and who appoints or employs a local government officer of the local governmental entity that is the subject of this questionnaire.

CONFLICT OF INTEREST QUESTIONNAIRE

FORM CIQ

For vendor or other person doing business with local governmental entity

Page 2

5 **Name of local government officer with whom filer has affiliation or business relationship. (Complete this section only if the answer to A, B, or C is YES.)**

This section, item 5 including subparts A, B, C &D, must be completed for each officer with whom the filer has affiliation or business relationship. Attach additional pages to this Form CIQ as necessary.

A. Is the Local government officer named in this section receiving or likely to receive taxable income from the filer of the questionnaire?

☐ YES ☐ NO

B. Is the filer of the questionnaire receiving or likely to receive taxable income from or at the direction of the local government officer named in this section AND the taxable income is not from the local governmental entity?

☐ YES ☐ NO

C. Is the filer of this questionnaire affiliated with a corporation or other business entity that the local government officer serves as an officer or director, or holds an ownership of 10 percent or more?

☐ YES ☐ NO

D. Describe each affiliation or business relationship.

6 **Describe any other affiliation or business relationship that might cause a conflict of interest.**

none

7

Robert Kirkman — Signature of person doing business with the governmental entity

05-01-2020 — Date

Supplier: **Kirk's Automotive Inc.**

CERTIFICATION AND RESTRICTIONS ON LOBBYING

I , **Robert Kirkman, President** hereby certify
(Name and title of official)
On behalf of that: **Kirk's Automotive, Inc**
(Name of Bidder / Company Name)

- No federal appropriated funds have been paid or will be paid, by or on behalf of the undersigned, to any person for influencing or attempting to influence an officer or employee of any agency, a Member of Congress, and officer or employee of Congress, or an employee of a Member of Congress in connection with the awarding of any federal contract, the making of any federal grant, the making of any federal loan, the entering into of any cooperative agreement, and the extension, continuation, renewal, amendment, or modification of any federal contract, grant, loan, or cooperative agreement.

- If any funds other than federal appropriated funds have been paid or will be paid to any person influencing or attempting to influence an officer or employee of any agency, a Member of Congress, and officer or employee of Congress, or an employee of a Member of Congress in connection with the federal contract, grant, loan, or cooperative agreement, the undersigned shall complete and submit Standard Form – , "Disclosure Form to Report Lobbying," in accordance with its instructions.

- The undersigned shall require that the language of this certification be included in the award documents for all sub-awards at all tiers (including sub-contracts, sub- grants and contracts under grants, loans, and cooperative agreements) and that all sub-recipients shall certify and disclose accordingly.

This certification is a material representation of fact upon which reliance was placed when this transaction was made or entered into. Submission of this certification is a prerequisite for making or entering into this transaction imposed by 31 U.S.C. § 1352 (as amended by the Lobbying Disclosure Act of 1995). Any person who fails to file the required certification shall be subject to a civil penalty of not less than $10,000 and not more than $100,000 for each such failure.

The undersigned certifies or affirms the truthfulness and accuracy of the contents of the statements submitted on or with this certification and understands that the provisions of 31 U.S.C. Section 3801, et seq., are applicable thereto.

Name of Bidder / Company Name **Kirk's Automotive, Inc.**

Type or print name **Robert Bruhn**

Signature of Authorized Representative

Date **April 30 / 2020**

Signature of Notary and SEAL **rrk@kirksauto.com**

Supplier: **Kirk's Automotive Inc.**

NON-COLLUSION AFFIDAVIT

This affidavit must be completed and submitted with the bid/proposal

The authorized representative for bidder / proposer, **Robert Kirkman**, being first duly sworn, deposes and says that he or she is of the party making the foregoing bid, that the bid is not made in the interest of, or on behalf of, any undisclosed person, partnership, company, association, organization, or corporation; that the bid is genuine and not collusive or sham; that the bidder has not directly or indirectly induced or solicited any other bidder to put in a false or sham bid, and has not directly or indirectly colluded, conspired, connived, or agreed with any bidder or anyone else to put in a sham bid, or that anyone shall refrain from bidding; that the bidder has not in any manner, directly or indirectly, sought by agreement, communication, or conference with anyone to fix the bid price of the bidder or any other bidder, or to fix any overhead, profit, or cost element of the bid price, or of that of any other bidder, or to secure any advantage against the public body awarding the contract of anyone interested in the proposed contract; that all statements contained in the bid are true; and, further, that the bidder has not, directly or indirectly, submitted his or her bid price or any breakdown thereof, or the contents thereof, or divulged information or data relative thereto, or paid, and will not pay, any fee to any corporation, partnership, company, association, organization, bid depository, or to any member or agent thereof to effectuate a collusive or sham bid.

Signature of Authorized Company Representative

Robert Kirkman, President
Name and Title of Authorized Company Representative

April 30 / 2020
Date

Subscribed and sworn to before me on **April 30 / 2020** (Date)

rrk@kirksauto.com
(Notary Seal) Signature Notary Public

Supplier: **Kirk's Automotive Inc.**

Prohibition of Contracts with Companies Boycotting Israel

This form must be completed and submitted with the bid/proposal

House Bill 89, effective September 1, 2017, amended the Texas Government Code to add Chapter 2270, Prohibition of Contracts with Companies Boycotting Israel.

Effective September 1, 2017, a state agency and a political subdivision (which includes a transportation authority) may not enter a contract with a company for goods or services unless the contract contains a written verification from the company that; (i) it does not Boycott Israel; and (ii) will not Boycott Israel during the term of the contract.

"Boycott Israel" is defined to mean refusing to deal with, terminating business activities with, or otherwise taking any action that is intended to penalize, inflict economic harm on, or limit commercial relations specifically with Israel, or with a person or entity doing business in Israel or in an Israeli-controlled territory, but does not include an action made for ordinary business purposes.

"Company" is defined to mean a for-profit sole proprietorship, organization, association, corporation, partnership, joint venture, limited partnership, limited liability partnership, or limited liability company, including a wholly owned subsidiary, majority-owned subsidiary, parent company, or affiliate of those entities or business associations that exists to make a profit.

"I, **Robert Kirkman** (Name of certifying official), the **President** (title or position of certifying official) of **Kirk's Automotive, Inc.** (name of company), verifies that (i) it does not Boycott Israel; and (ii) will not Boycott Israel during the term of the Contract. This section does not apply if the Company is a sole proprietor, a non-profit entity or a governmental entity; and only applies if: (i) the Company has ten (10) or more fulltime employees and (ii) this Contract has a value of $100,000.00 or more to be paid under the terms of this Contract.

Signature of Certifying Official Title:
Title: **President**
Date: **rrk@kirksauto.com**

Supplier: **Kirk's Automotive Inc.**

☒

GOOD FAITH EFFORT FORM

If you have failed to secure DBE participation and you have subcontracting and/or supplier opportunities or if you're DBE participation is less than the DCTA's project goal, you must complete this form.

Prime Company Name (please print): **Kirk's Automotive, Inc.**	**DCTA Contract Number: 20-13** **DCTA Contract Goal: 7 %**
Check applicable response to describe prime:	**DBE:** **(yes ☐) Certifying Entity:** **(no ☑)**

If the bidder's method of compliance with the DBE goal is based upon demonstration of a "good faith effort", the bidder will have the burden of correctly and accurately preparing and submitting the documentation required by the DCTA. Compliance with items 1 through 6 as it appears on the Good Faith Effort Form, in its entirety shall satisfy the good faith effort requirement upon verification by DCTA's staff and confirmation of no counterfeit information, intentional and/or knowing misrepresentation of facts or intentional discrimination by the contractor.

Failure to complete this form, in its entirety with supporting documentation, and received by the DBE Liaison, will result in the bid being considered non-responsive to bid specifications. Please list each and every subcontracting and/or supplier opportunity for the completion of this project, regardless of whether it is to be provided by a DBE or non-DBE. (DO NOT LIST NAMES OF FIRMS).

1. Please list each and every (subcontracting and/or supplier opportunity) for the completion of this project, regardless of whether it is to be provided by a DBE or non DBE (DO NOT LIST NAMES OF FIRMS). **List opportunities only**.

(Use additional sheets, if necessary)

List of Subcontracting Opportunities:	List of Supplier Opportunities:

2. Did you obtain a current (**not more than 60 days old from the initial response to the DCTA's solicitation due date)** list of DBE subcontracts and/or suppliers from the DCTA DBE Liaison?

   (yes ☐) (no ☑)

   DBE listing request date to the DCTA DBELO :_ //**20**

3. Did you solicit bids from DBE firms, within the subcontracting and/or supplier areas previously listed by mail?

   (yes ☐) (no ☑)

   Attach the DBE mail listing including a dated copy of the letter mailed, or email correspondence showing proof of solicitation to DBE firms. **If you did not fulfill, please write the following statement: "I did not comply"**

4. Did you solicit bids from DBE firms within the subcontracting and/or supplier areas previously listed by telephone?

   (yes ☐) (no ☑)

   Attach DBE contact list to include: DBE firm, person contacted, telephone number, date and time of contact. **If you did not fulfill, please write the following statement: "I did not comply"**

   NOTE: A facsimile may be used to comply with either 3 or 4 but may **not** be used for both. If a facsimile is used, attach the fax confirmation, which is to provide: DBE name, date, time, fax number and documentation faxed.

   NOTE: If the list of DBE firms for a particular subcontracting/supplier opportunity is ten (10) or less, the contractor must contact the entire list to be in compliance with item 3 and 4. If the list of DBE firms for a particular subcontracting/supplier opportunity is ten (10) or more, the contractor must contact at least two/thirds (2/3) of the list within such area of opportunity, but not less than ten to be in compliance with items 3 and 4.

5. Did you provide plans and specifications to potential DBE firms or information regarding the location of plans and specifications in order to assist the DBE firms?

   (yes ☐) (no ☑)

6. Submit documentation if DBE firms were rejected. The documentation submitted should be in the form of an affidavit, include a detailed explanation of why the DBE firms were rejectedand any supporting documentation the contractor wishes to be considered by the DCTA. In the event of an actual dispute concerning quotes, the contractor will provide for confidential access to and inspection of any relevant documentation by DCTA Legal representative. (**Please use additional sheets, if necessary and attach**)

Company Name	Telephone	Contact Person	Scope of Work	Reason for Rejection

ADDITIONAL INFORMATION:
Please provide additional information you feel will further explain your good and honest efforts to

obtain DBE participation on this project

The bidder further agrees to provide, directly to the DCTA upon request, complete and accurat information regarding actual work performed on this contract, the payment thereof and an proposed changes to the original arrangements submitted with this bid. The bidder also agrees t allow an audit and/or examination of any books, records and files held by their company that wi substantiate the actual work performed on this contract, by an authorized DCTA employee.
Any intentional and/or knowing misrepresentation of facts will be grounds for terminating the contrac or debarment from DCTA work for a period of not less than three (3) years and for initiating actio under laws concerning false statements. Any breach of contract may result in a determination of a irresponsible offeror and barred from participating in DCTA work for a period of time not less than on (1) year.

The undersigned certifies that the information provided and the listed was/were contacted in good faith. It is understood that any DBE firms listed on the Good Faith Effort Form will be contacted and the reasons for not using them will be verified by the DCTA DBELO.

Authorized Signature: Robert Kirkman	Printed Signature: Robert Kirkman
Title: President	Contact Name and Title (if different):
Company Name: Kirk's Automotive, Inc.	Phone Number: 3139337030
Street Address: 9330 Roselawn	Email Address: rrk@kirksauto.com
City/County/State and Zip Code Detroit/Wayne/MI 48204	Date: May, 1 20 20
DCTA DBELO Authorized Signature:	Date: , 20 rrk@kirksauto.com

Bid #20-13 - Cummins Auto Parts Bid

Creation Date **Apr 10, 2020**
Start Date **Apr 13, 2020 9:20:14 AM CDT**
End Date **May 1, 2020 2:00:00 PM CDT**
Awarded Date **Not Yet Awarded**

MUNCIE TRANSIT SUPPLY ✓ **$175,931.40 (38/38 items)**

Bid Contact **Karen Louck**
klouck@abc-companies.com
Ph 765-216-3287
Fax 765-213-3325

Address **3720 SOUTH MADISON STREET**
MUNCIE, IN 47302

Agency Notes:	**Supplier Notes:**

Item #	Line Item	Unit Price	Qty/Unit	Total Price
20-13-01-01 ✓	GASKET PARTICULATE FILTER GILLIG1100 - First Offer	$12.99	14 / each	$181.86
Product Code: **Agency Notes:**		**Supplier Product Code:** **Supplier Notes:** Lead Time 5-7 Days		
20-13-01-02 ✓	SENSOR PRESSURE DIFF EXH GILLIG1100 - First Offer	$133.40	6 / each	$800.40
Product Code: **Agency Notes:**		**Supplier Product Code:** **Supplier Notes:** Lead Time 5-7 Days		
20-13-01-03 ✓	GASKET PARTICULATE GILLIG 1100 - First Offer	$6.98	20 / each	$139.60
Product Code: **Agency Notes:**		**Supplier Product Code:** **Supplier Notes:** Lead Time 5-7 Days		

20-13-01-04 ✓	OUTLET NOX SENSOR CHAMPION & EZ RIDER - First Offer	$300.00	9 / each	$2,700.00
Product Code: **Agency Notes:**		**Supplier Product Code:** **Supplier Notes:** Lead Time 5-7 Day, Bidding Dinex		
20-13-01-05 ✓	BELT MAIN NEW CHAMP - First Offer	$24.04	11 / each	$264.44
Product Code: **Agency Notes:**		**Supplier Product Code:** **Supplier Notes:** Lead Time 5-7 Days, Bidding Gates		
20-13-01-06 ✓	EGR UPDATE KIT GILLIG 1100 - First Offer	$505.10	5 / each	$2,525.50
Product Code: **Agency Notes:**		**Supplier Product Code:** **Supplier Notes:** Lead Time 5-7 Days		
20-13-01-07 ✓	COOLANT LOW SENSOR 16 17 GILLIG & EZ - First Offer	$175.00	6 / each	$1,050.00
Product Code: **Agency Notes:**		**Supplier Product Code:** **Supplier Notes:** Lead Time 5-7 Days, Bidding ABC Select. Our version is stainless steel not plastic like the Cummins		
20-13-01-08 ✓	DOSER VALVE SEAL KIT NEW CHAMP EASYRIDER - First Offer	$37.92	6 / each	$227.52
Product Code: **Agency Notes:**		**Supplier Product Code:** **Supplier Notes:** Lead Time 5-7 Days		
20-13-	GASKET AIR COMP MOUNTING NEW CHAMP - First Offer	$22.67	7 / each	$158.69

01-09 ✓				
Product Code: **Agency Notes:**		**Supplier Product Code:** **Supplier Notes:** Lead Time 5-7 Days		
20-13-01-10 ✓	GASKET EGR AIR TUBE 700 GILLIG - First Offer	$2.83	14 / each	$39.62
Product Code: **Agency Notes:**		**Supplier Product Code:** **Supplier Notes:** Lead Time 5-7 Days		
20-13-01-11 ✓	TURBO OIL RETURN CHAMPION - First Offer	$58.90	6 / each	$353.40
Product Code: **Agency Notes:**		**Supplier Product Code:** **Supplier Notes:** Lead Time 5-7 Days		
20-13-01-12 ✓	DOSER VALVE DEF INJ NEWCHAMP EASY RIDER - First Offer	$366.46	6 / each	$2,198.76
Product Code: **Agency Notes:**		**Supplier Product Code:** **Supplier Notes:** Lead Time 5-7 Days, Bidding new no core required.		
20-13-01-13 ✓	EGR COOLER GILLIG - First Offer	$1,134.10	5 / each	$5,670.50
Product Code: **Agency Notes:**		**Supplier Product Code:** **Supplier Notes:** Lead Time 5-7 Days, Bidding new no core required.		
20-13-01-14 ✓	DEF DOSING UNIT PUMP CHAMPION - First Offer	$1,266.56	6 / each	$7,599.36
Product Code: **Agency Notes:**		**Supplier Product Code:** **Supplier Notes:** Lead Time 5-7 Days, Bidding new no core required.		
20-13-01-15 ✓	INLET NOX SENSOR CHAMPION - First Offer	$325.00	9 / each	$2,925.00
Product Code: **Agency Notes:**		**Supplier Product Code:** **Supplier Notes:** Lead Time 5-7 Days, Bidding Dinex. No core required.		
20-13-01-16 ✓	AIR COMPRESSOR CHAMPION - First Offer	$1,408.00	8 / each	$11,264.00

Product Code: **Agency Notes:**		**Supplier Product Code:** **Supplier Notes:** Lead Time 5-7 Days, Bidding new no core required.		
20-13-01-17 ✓	DPF Filter - First Offer	$1,220.70	3 / each	$3,662.10
Product Code: **Agency Notes:**		**Supplier Product Code:** **Supplier Notes:** Lead Time 5-7 Days		
20-13-01-18 ✓	DPF Filter - First Offer	$1,020.00	3 / each	$3,060.00
Product Code: **Agency Notes:**		**Supplier Product Code:** **Supplier Notes:** Lead Time 5-7 Days, Bidding Dinex.		
20-13-01-19 ✓	DPF Filter - First Offer	$1,301.69	6 / each	$7,810.14
Product Code: **Agency Notes:**		**Supplier Product Code:** **Supplier Notes:** Lead Time 5-7 Days, Bidding Dinex		
20-13-01-20 ✓	DPF Filter - First Offer	$1,020.00	6 / each	$6,120.00
Product Code: **Agency Notes:**		**Supplier Product Code:** **Supplier Notes:** Lead Time 5-7 Days, Bidding Dinex		
20-13-01-21 ✓	DPF Filter - First Offer	$1,313.24	10 / each	$13,132.40
Product Code: **Agency Notes:**		**Supplier Product Code:** **Supplier Notes:** Lead Time 5-7 Days		
20-13-01-22 ✓	DPF Filter - First Offer	$1,209.00	10 / each	$12,090.00
Product Code: **Agency Notes:**		**Supplier Product Code:** **Supplier Notes:** Lead Time 5-7 Days, Bidding Dinex		
20-13-01-23 ✓	DPF Filter - First Offer	$950.00	4 / each	$3,800.00
Product Code: **Agency Notes:**		**Supplier Product Code:** **Supplier Notes:** Lead Time 5-7 Days, Bidding Dinex		

20-13-01-24 ✓	DPF Filter - First Offer	$1,125.00	4 / each	$4,500.00
Product Code: **Agency Notes:**		**Supplier Product Code:** **Supplier Notes:** Lead Time 5-7 Days, Bidding Dinex No core required.		
20-13-01-25 ✓	Turbo Actuator Kit - First Offer	$1,273.17	4 / each	$5,092.68
Product Code: **Agency Notes:**		**Supplier Product Code:** **Supplier Notes:** Lead Time 5-7 Days, Bidding new no core required.		
20-13-01-26 ✓	Turbo Kit - First Offer	$3,051.86	4 / each	$12,207.44
Product Code: **Agency Notes:**		**Supplier Product Code:** **Supplier Notes:** Lead Time 5-7 Days, Bidding new no core required.		
20-13-01-27 ✓	Exhaust Bellow - First Offer	$310.79	35 / each	$10,877.65
Product Code: **Agency Notes:**		**Supplier Product Code:** **Supplier Notes:** Lead Time 5-7 Days		
20-13-01-28 ✓	CPR Water Outlet Tube - First Offer	$34.88	4 / each	$139.52
Product Code: **Agency Notes:**		**Supplier Product Code:** **Supplier Notes:** Lead Time 5-7 Days		
20-13-01-29 ✓	DEF Harness - First Offer	$635.55	10 / each	$6,355.50
Product Code: **Agency Notes:**		**Supplier Product Code:** **Supplier Notes:** Lead Time 5-7 Days		
20-13-01-30 ✓	EGR Cooler - First Offer	$1,134.10	20 / each	$22,682.00
Product Code: **Agency Notes:**		**Supplier Product Code:** **Supplier Notes:** Lead Time 5-7 Days, Bidding new no core required.		
20-13-01-	EGR Cooler Kit - First Offer	$505.10	10 / each	$5,051.00

31 ✓				
Product Code: **Agency Notes:**		**Supplier Product Code:** **Supplier Notes:** Lead Time 5-7 Days		
20-13-01-32 ✓	EGR Valve Kit - First Offer	$650.50	30 / each	$19,515.00
Product Code: **Agency Notes:**		**Supplier Product Code:** **Supplier Notes:** Lead Time 5-7 Days, Bidding new no core required.		
20-13-01-33 ✓	Fuel Pump - First Offer	$0.001	5 / each	$0.005
Product Code: **Agency Notes:**		**Supplier Product Code:** **Supplier Notes:** This line is a No Bid.		
20-13-01-34 ✓	Fuel Pump - First Offer	$0.001	15 / each	$0.015
Product Code: **Agency Notes:**		**Supplier Product Code:** **Supplier Notes:** This line is a No Bid.		
20-13-01-35 ✓	GASKET, OIL PAN - First Offer	$127.87	3 / each	$383.61
Product Code: **Agency Notes:**		**Supplier Product Code:** **Supplier Notes:** Lead Time 5-7 Days		
20-13-01-	Oil Pan - First Offer	$361.78	3 / each	$1,085.34

36 ✓				
Product Code: **Agency Notes:**		**Supplier Product Code:** **Supplier Notes:** Lead Time 5-7 Days		
20-13-01-37 ✓	GASKET EXHAUST ELBOW TO PIPE GILLIG - First Offer	$4.29	15 / each	$64.35
Product Code: **Agency Notes:**		**Supplier Product Code:** **Supplier Notes:** Lead Time 5-7 Days		
20-13-01-38 ✓	GASKET AFMDEVICE - First Offer	$5.10	40 / each	$204.00
Product Code: **Agency Notes:**		**Supplier Product Code:** **Supplier Notes:** Lead Time 5-7 Days		

Kirk's Automotive Inc. **$248,205.11 (38/38 items)**

Bid Contact **Al Benish**
rrk@kirksauto.com
Ph 313-933-7030

Address **9330 Roselawn**
Detroit, MI 48204

Agency Notes:	**Supplier Notes:**

Item #	Line Item	Unit Price	Qty/Unit	Total Price
20-13-01-01	GASKET PARTICULATE FILTER GILLIG1100 - First Offer	$10.75	14 / each	$150.50
Product Code: **Agency Notes:**		**Supplier Product Code:** **Supplier Notes:** Please refer to Approved Equal Request 3-4 day delivery		
20-13-01-02	SENSOR PRESSURE DIFF EXH GILLIG1100 - First Offer	$75.00	6 / each	$450.00
Product Code: **Agency Notes:**		**Supplier Product Code:** **Supplier Notes:** Please refer to Approved Equal Request		

Supplier: **MUNCIE TRANSIT SUPPLY**

https://

BIDDER'S QUESTIONNAIRE

1. Name of Contractor ("Business", herein)
Muncie Reclamation and Supply

2. Doing Business As (other business name if applicable)
Muncie Transit Supply

3. Federal Tax ID Number
36-3648851

4. Business Mailing Address (include City/State/Zip Code)
3720 S. Madison Street, Muncie, IN. 47302

5. Business Email Address
bhuff@abc-companies.com

6. Business Telephone
(765) 288-1971

Business Fax Number
(765) 213-3325

7. Business Type
Corporation

8. Number of Years in Business
67

9. Annual Gross Revenue for the past three years (M = Millions)
☐ $1M or Less ☐ $1M-$5M ☐ $5M-$10M
☐ $10M-$16M ☑ $16M+

10. Number of Employees
☑ 100 or Less ☐ 101-500 ☐ 501-750
☐ 751-1,000 ☐ 1,001+

11. Is Business a DBE Firm?
☐ Yes ☑ No

12. Is Business Owned by Minority Ethnicity?
☐ Yes ☑ No

13. Ethnic Group
Black American
Hispanic American
Native American
Other
Subcontinent Asian American
White/Caucasian
Asian Pacific American

14. Woman Owned?
☐ Yes ☑ No

15. Veteran Owned
☐ Yes ☑ No

16. Type of Work Performed

19. Is any litigation pending against the Business?
☐ Yes ☑ No

20. Has the Business been debarred, suspended, proposed for debarment, and declared ineligible, voluntarily excluded or otherwise disqualified from bidding, proposing or contracting?
☐ Yes ☑ No

21. Has the Business ever been a defaulter, as principal, surety or otherwise?
☐ Yes ☑ No

22. Has the government or other public entity requested or required enforcement of any of its rights under a surety agreement on the basis of a default or in lieu of declaring the Business in default?
☐ Yes ☑ No

23. Is the Business in arrears upon a contract or debt?
☐ Yes ☑ No

24. Are there any proceedings pending relating to the Business' responsibility, debarment, suspension, voluntary exclusion or qualification to receive a public contract?
☐ Yes ☑ No

25. Have liquidated damages or penalty provisions been assessed against the Business for failure to complete the work on time or for any other reason?
☐ Yes ☑ No

26. If a "yes" response is given to questions 17-25, please provide a detailed explanation including dates, references to contract information, contacts, etc. (attach additional pages as necessary).
DCTA reserves the right to inquire further with respect thereto

27. List the name and business address of each person or each entity which has a 10% or more ownership or control interest in the Business (attach additional pages as necessary).

Dane Cornell, 17469 West Colonial Drive, Winter Garden, FL 24787 32.66%
Estate of Ronald R. Cornell, 17469 West Colonial Drive, Winter Garden, FL 34787 30.52%
Van Hool, N.V., Bernard Van Hoolstraat 58, B-2500 Lier Koningshooikt, Belgium 35.32%
ESOP 1.50%

I, individually and on behalf of the business named above, do by my signature below certify that the information provided in this questionnaire is true and correct. I understand that if the information provided herein contains any false statements or any misrepresentations: 1) DCTA will have the grounds to terminate any or all contracts which DCTA has or may have with the business; 2) DCTA may disqualify the business named above from consideration for contracts and/or 3) DCTA may have grounds for initiating legal action under federal, state or local law. ***Note: This questionnaire is also a certification form; the information requested will be used to determine small business status as per 13 CFR Part 121. Additionally, this information will allow DCTA to report the amount of subcontracting activity for DCTA.***

Printed Name
Becky Huff
Title

Supplier: **MUNCIE TRANSIT SUPPLY**

https://

BIDDER'S QUESTIONNAIRE

1. Name of Contractor ("Business", herein)
Muncie Reclamation and Supply

2. Doing Business As (other business name if applicable)
Muncie Transit Supply

3. Federal Tax ID Number
36-3648851

4. Business Mailing Address (include City/State/Zip Code)
3720 S. Madison Street, Muncie, IN. 47302

5. Business Email Address
bhuff@abc-companies.com

6. Business Telephone
(765) 288-1971

Business Fax Number
(765) 213-3325

7. Business Type
Corporation

8. Number of Years in Business
67

9. Annual Gross Revenue for the past three years (M = Millions)
☐ $1M or Less ☐ $1M-$5M ☐ $5M-$10M
☐ $10M-$16M ☑ $16M+

10. Number of Employees
☑ 100 or Less ☐ 101-500 ☐ 501-750
☐ 751-1,000 ☐ 1,001+

11. Is Business a DBE Firm?
☐ Yes ☑ No

12. Is Business Owned by Minority Ethnicity?
☐ Yes ☑ No

13. Ethnic Group
Black American
Hispanic American
Native American
Other
Subcontinent Asian American
White/Caucasian
Asian Pacific American

14. Woman Owned?
☐ Yes ☑ No

15. Veteran Owned
☐ Yes ☑ No

16. Type of Work Performed

19. Is any litigation pending against the Business?
☐ Yes ☑ No

20. Has the Business been debarred, suspended, proposed for debarment, and declared ineligible, voluntarily excluded or otherwise disqualified from bidding, proposing or contracting?
☐ Yes ☑ No

21. Has the Business ever been a defaulter, as principal, surety or otherwise?
☐ Yes ☑ No

22. Has the government or other public entity requested or required enforcement of any of its rights under a surety agreement on the basis of a default or in lieu of declaring the Business in default?
☐ Yes ☑ No

23. Is the Business in arrears upon a contract or debt?
☐ Yes ☑ No

24. Are there any proceedings pending relating to the Business' responsibility, debarment, suspension, voluntary exclusion or qualification to receive a public contract?
☐ Yes ☑ No

25. Have liquidated damages or penalty provisions been assessed against the Business for failure to complete the work on time or for any other reason?
☐ Yes ☑ No

26. If a "yes" response is given to questions 17-25, please provide a detailed explanation including dates, references to contract information, contacts, etc. (attach additional pages as necessary).
DCTA reserves the right to inquire further with respect thereto

27. List the name and business address of each person or each entity which has a 10% or more ownership or control interest in the Business (attach additional pages as necessary).

Dane Cornell, 17469 West Colonial Drive, Winter Garden, FL 24787 32.66%
Estate of Ronald R. Cornell, 17469 West Colonial Drive, Winter Garden, FL 34787 30.52%
Van Hool, N.V., Bernard Van Hoolstraat 58, B-2500 Lier Koningshooikt, Belgium 35.32%
ESOP 1.50%

I, individually and on behalf of the business named above, do by my signature below certify that the information provided in this questionnaire is true and correct. I understand that if the information provided herein contains any false statements or any misrepresentations: 1) DCTA will have the grounds to terminate any or all contracts which DCTA has or may have with the business; 2) DCTA may disqualify the business named above from consideration for contracts and/or 3) DCTA may have grounds for initiating legal action under federal, state or local law. ***Note: This questionnaire is also a certification form; the information requested will be used to determine small business status as per 13 CFR Part 121. Additionally, this information will allow DCTA to report the amount of subcontracting activity for DCTA.***

Printed Name
Becky Huff
Title

☐ Manufacturing ☐ Professional Service

☐ Retail ☑ General/Technical Service

17. Has the Business, or any officer or partner thereof, failed to complete a contract?

☐ Yes ☑ No

18. Has the Bubsiness ever been declared "Not Responsible

☐ Yes ☑ No

Contract Manager

Signature of owner

April 29, 2020

Date

bhuff@abc-companies.com

Email Address

(Owner, CEO, President, Majority Stockholder or Designated Representative) Questions about this document should be directed to the Procurement Manager

☐ Manufacturing ☐ Professional Service

☐ Retail ☑ General/Technical Service

17. Has the Business, or any officer or partner thereof, failed to complete a contract?

☐ Yes ☑ No

18. Has the Bubsiness ever been declared "Not Responsible

☐ Yes ☑ No

Contract Manager

Signature of owner

April 29, 2020

Date

bhuff@abc-companies.com

Email Address

(Owner, CEO, President, Majority Stockholder or Designated Representative) Questions about this document should be directed to the Procurement Manager

Supplier: **MUNCIE TRANSIT SUPPLY**

BUY AMERICA CERTIFICATION
(STEEL OR MANUFACTURED PRODUCTS)
[61 FR 6302, Feb. 16, 1996, as amended at 74 FR 30239,
June 25, 2009]

General Requirement (as stated in 49 CFR 661.5)

(a) Except as provided in 49 CFR 661.7 and 49 CFR 661.11, no funds may be obligated by FTA for a grantee project unless all iron, steel, and manufactured products used in the project are produced in the United States.

(b) All steel and iron manufacturing processes must take place in the United States, except metallurgical processes involving refinement of steel additives.

(c) The steel and iron requirements apply to all construction materials made primarily of steel or iron and used in infrastructure projects such as, transit or maintenance facilities, rail lines, and bridges. These items include, but are not limited to, structural steel or iron, steel or iron beams and columns, running rail and contact rail. These requirements do not apply to steel or iron used as components or subcomponents of other manufactured products or rolling stock, or to bimetallic power rail incorporating steel or iron components.

(d) For a manufactured product to be considered produced in the United States:

(1) All of the manufacturing processes for the product must take place in the United States; and

(2) All of the components of the product must be of U.S. origin. A component is considered of U.S. origin if it is manufactured in the United States, regardless of the origin of its subcomponents.

If steel, iron, or manufactured products (as defined in 49 CFR 661.3 and 661.5) are being procured, the appropriate certificate as set forth below shall be completed and submitted by each bidder or offeror in accordance with the requirement contained in 49 CFR 661.13(b).

Certificate of Compliance with Buy America Requirements.
The bidder or offeror hereby certifies that it will comply with the requirements of 49 U.S.C. 5323(j)(1), and the applicable regulations in 49 CFR part 661.

Company

Name	**Becky Huff**	Title	**Contract Manager**
Signature		Date	**April 29, 2020**

Certificate of Non-Compliance with Buy America Steel or Manufactured Products Requirements The bidder or offeror hereby certifies that it cannot comply with the requirements of 49 U.S.C. 5323(j), but it may qualify for an exception to the requirement pursuant to 49 U.S.C. 5323(j)(2), as amended, and the applicable regulations in 49 C.F.R. 661.7.

Company

Name	Title

Signature Date

Supplier: **MUNCIE TRANSIT SUPPLY**

Instructions for Certification: By signing and submitting this bid or proposal, the prospective lower tier participant is providing the signed certification set out below.

(1) It will comply and facilitate compliance with U.S. DOT regulations, "Non-procurement Suspension and Debarment," 2 CFR part 1200, which adopts and supplements the U.S. Office of Management and Budget (U.S. OMB) "Guidelines to Agencies on Government-wide Debarment and Suspension (Non-procurement)," 2 CFR part 180,

(2) To the best of its knowledge and belief, that its Principals and Subrecipients at the first tier:

a. Are eligible to participate in covered transactions of any Federal department or agency and are not presently:

(1) Debarred,
(2) Suspended,
(3) Proposed for debarment,
(4) Declared ineligible,
(5) Voluntarily excluded, or
(6) Disqualified,

b. Its management has not within a three-year period preceding its latest application or proposal been convicted of or had a civil judgment rendered against any of them for:

(1) Commission of fraud or a criminal offense in connection with obtaining, attempting to obtain, or performing a public (Federal, State, or local) transaction, or contract under a public transaction,
(2) Violation of any Federal or State antitrust statute, or
(3) Commission of embezzlement, theft, forgery, bribery, falsification or destruction of records, making any false statement, or receiving stolen property,

c. It is not presently indicted for, or otherwise criminally or civilly charged by a governmental entity (Federal, State, or local) with commission of any of the offenses listed in the preceding subsection 2.b of this Certification,

d. It has not had one or more public transactions (Federal, State, or local) terminated for cause or default within a three-year period preceding this Certification,

e. If, at a later time, it receives any information that contradicts the statements of subsections 2.a – 2.d above, it will promptly provide that information to FTA,

f. It will treat each lower tier contract or lower tier subcontract under its Project as a covered lower tier contract for purposes of 2 CFR part 1200 and 2 CFR part 180 if it:

(1) Equals or exceeds $25,000,
(2) Is for audit services, or
(3) Requires the consent of a Federal official, and

g. It will require that each covered lower tier contractor and subcontractor:
(1) Comply and facilitate compliance with the Federal requirements of 2 CFR parts 180 and 1200, and
(2) Assure that each lower tier participant in its Project is not presently declared by any

Federal department or agency to be:

a. Debarred from participation in its federally funded Project,
b. Suspended from participation in its federally funded Project,
c. Proposed for debarment from participation in its federally funded Project,
d. Declared ineligible to participate in its federally funded Project,
e. Voluntarily excluded from participation in its federally funded Project, or
f. Disqualified from participation in its federally funded Project, and

3. It will provide a written explanation as indicated on a page attached in FTA's TEAM-Web or the Signature Page if it or any of its principals, including any of its first tier Subrecipients or its Third Party Participants at a lower tier, is unable to certify compliance with the preceding statements in this Certification Group.

Certification

Contractor **Muncie Reclamation and Supply dba Muncie Transit Supply**

Name and Title of Contractor's Authorized Official **Becky Huff, Contract Manager**

Signature Date **April 29, 2020**

Supplier: **MUNCIE TRANSIT SUPPLY**

CONFLICT OF INTEREST QUESTIONNAIRE

FORM CIQ

For vendor or other person doing business with local governmental entity

This questionnaire is being filed in accordance with chapter 176 of the Local Government Code by a person doing business with the governmental entity.

OFFICE USE ONLY

By law this questionnaire must be filed with the records administrator of the local government not later than the 7th business day after the date the person becomes aware of facts that require the statement to be filed. *See* Section 176.006, Local Government Code.

Date Received

A person commits an offense if the person violates Section 176.006, Local Government Code. An offense under this section is a Class C misdemeanor.

1 Name of person doing business with local governmental entity.

Muncie Reclamation and Supply dba Muncie Transit Supply

2 ☐ **Check this box if you are filing an update to a previously filed questionnaire.**

(The law requires that you file an updated completed questionnaire with the appropriate filing authority not later than September 1 of the year for which an activity described in Section 176.006(a), Local Government Code, is pending and not later than the 7th business day after the date the originally filed questionnaire becomes incomplete or inaccurate.)

3 Describe each affiliation or business relationship with an employee or contractor of the local governmental entity who makes recommendations to a local government officer of the local governmental entity with respect to expenditure of money.

None

4 Describe each affiliation or business relationship with a person who is a local government office and who appoints or employs a local government officer of the local governmental entity that is the subject of this questionnaire.

None

CONFLICT OF INTEREST QUESTIONNAIRE

FORM CIQ

For vendor or other person doing business with local governmental entity

Page 2

5 **Name of local government officer with whom filer has affiliation or business relationship. (Complete this section only if the answer to A, B, or C is YES.)**

This section, item 5 including subparts A, B, C &D, must be completed for each officer with whom the filer has affiliation or business relationship. Attach additional pages to this Form CIQ as necessary.

A. Is the Local government officer named in this section receiving or likely to receive taxable income from the filer of the questionnaire?

☐ YES ☑ NO

B. Is the filer of the questionnaire receiving or likely to receive taxable income from or at the direction of the local government officer named in this section AND the taxable income is not from the local governmental entity?

☐ YES ☑ NO

C. Is the filer of this questionnaire affiliated with a corporation or other business entity that the local government officer serves as an officer or director, or holds an ownership of 10 percent or more?

☐ YES ☑ NO

D. Describe each affiliation or business relationship.

6 **Describe any other affiliation or business relationship that might cause a conflict of interest.**

None

7

Signature of person doing business with the governmental entity

April 29, 2020
Date

Supplier: **MUNCIE TRANSIT SUPPLY**

CERTIFICATION AND RESTRICTIONS ON LOBBYING

I , **Becky Huff/Contract Manager** hereby certify
(Name and title of official)
On behalf of that: **Muncie Reclamation and Supply dba Muncie Transit Supply**
(Name of Bidder / Company Name)

- No federal appropriated funds have been paid or will be paid, by or on behalf of the undersigned, to any person for influencing or attempting to influence an officer or employee of any agency, a Member of Congress, and officer or employee of Congress, or an employee of a Member of Congress in connection with the awarding of any federal contract, the making of any federal grant, the making of any federal loan, the entering into of any cooperative agreement, and the extension, continuation, renewal, amendment, or modification of any federal contract, grant, loan, or cooperative agreement.

- If any funds other than federal appropriated funds have been paid or will be paid to any person influencing or attempting to influence an officer or employee of any agency, a Member of Congress, and officer or employee of Congress, or an employee of a Member of Congress in connection with the federal contract, grant, loan, or cooperative agreement, the undersigned shall complete and submit Standard Form – , "Disclosure Form to Report Lobbying," in accordance with its instructions.

- The undersigned shall require that the language of this certification be included in the award documents for all sub-awards at all tiers (including sub-contracts, sub- grants and contracts under grants, loans, and cooperative agreements) and that all sub-recipients shall certify and disclose accordingly.

This certification is a material representation of fact upon which reliance was placed when this transaction was made or entered into. Submission of this certification is a prerequisite for making or entering into this transaction imposed by 31 U.S.C. § 1352 (as amended by the Lobbying Disclosure Act of 1995). Any person who fails to file the required certification shall be subject to a civil penalty of not less than $10,000 and not more than $100,000 for each such failure.

The undersigned certifies or affirms the truthfulness and accuracy of the contents of the statements submitted on or with this certification and understands that the provisions of 31 U.S.C. Section 3801, et seq., are applicable thereto.

Name of Bidder / Company Name **Muncie Reclamation and Supply dba Muncie Transit Supply**

Type or print name **Becky Huff**

Signature of Authorized Representative

Date **April 29, 2020**

Signature of Notary and SEAL **Mechelle Peckham 653994, expires May 28, 2022**

Supplier: **MUNCIE TRANSIT SUPPLY**

NON-COLLUSION AFFIDAVIT

This affidavit must be completed and submitted with the bid/proposal

The authorized representative for bidder / proposer, **Muncie Reclamation and Supply dba Muncie Transit Supply**, being first duly sworn, deposes and says that he or she is of the party making the foregoing bid, that the bid is not made in the interest of, or on behalf of, any undisclosed person, partnership, company, association, organization, or corporation; that the bid is genuine and not collusive or sham; that the bidder has not directly or indirectly induced or solicited any other bidder to put in a false or sham bid, and has not directly or indirectly colluded, conspired, connived, or agreed with any bidder or anyone else to put in a sham bid, or that anyone shall refrain from bidding; that the bidder has not in any manner, directly or indirectly, sought by agreement, communication, or conference with anyone to fix the bid price of the bidder or any other bidder, or to fix any overhead, profit, or cost element of the bid price, or of that of any other bidder, or to secure any advantage against the public body awarding the contract of anyone interested in the proposed contract; that all statements contained in the bid are true; and, further, that the bidder has not, directly or indirectly, submitted his or her bid price or any breakdown thereof, or the contents thereof, or divulged information or data relative thereto, or paid, and will not pay, any fee to any corporation, partnership, company, association, organization, bid depository, or to any member or agent thereof to effectuate a collusive or sham bid.

Signature of Authorized Company Representative

Becky Huff/Contract Manager
Name and Title of Authorized Company Representative

April 29, 2020
Date

Subscribed and sworn to before me on **April 29, 2020** (Date)

Mechelle Peckham
(Notary Seal) Signature Notary Public

Supplier: **MUNCIE TRANSIT SUPPLY**

Prohibition of Contracts with Companies Boycotting Israel

This form must be completed and submitted with the bid/proposal

House Bill 89, effective September 1, 2017, amended the Texas Government Code to add Chapter 2270, Prohibition of Contracts with Companies Boycotting Israel.

Effective September 1, 2017, a state agency and a political subdivision (which includes a transportation authority) may not enter a contract with a company for goods or services unless the contract contains a written verification from the company that; (i) it does not Boycott Israel; and (ii) will not Boycott Israel during the term of the contract.

"Boycott Israel" is defined to mean refusing to deal with, terminating business activities with, or otherwise taking any action that is intended to penalize, inflict economic harm on, or limit commercial relations specifically with Israel, or with a person or entity doing business in Israel or in an Israeli-controlled territory, but does not include an action made for ordinary business purposes.

"Company" is defined to mean a for-profit sole proprietorship, organization, association, corporation, partnership, joint venture, limited partnership, limited liability partnership, or limited liability company, including a wholly owned subsidiary, majority-owned subsidiary, parent company, or affiliate of those entities or business associations that exists to make a profit.

"I, **Becky Huff** (Name of certifying official), the **Contract Manager** (title or position of certifying official) of **Muncie Reclamation and Supply dba Muncie Transit Supply** (name of company), verifies that (i) it does not Boycott Israel; and (ii) will not Boycott Israel during the term of the Contract. This section does not apply if the Company is a sole proprietor, a non-profit entity or a governmental entity; and only applies if: (i) the Company has ten (10) or more fulltime employees and (ii) this Contract has a value of $100,000.00 or more to be paid under the terms of this Contract.

Signature of Certifying Official Title:
Title: **Contract Manager**
Date: **April 29, 2020**

Supplier: **MUNCIE TRANSIT SUPPLY**

☒

GOOD FAITH EFFORT FORM

If you have failed to secure DBE participation and you have subcontracting and/or supplier opportunities or if you're DBE participation is less than the DCTA's project goal, you must complete this form.

Prime Company Name (please print): **Muncie Reclamation and Supply dba Muncie Transit Supply**	**DCTA Contract Number: 20-13** **DCTA Contract Goal: 0 %**
Check applicable response to describe prime:	**DBE:** **(yes ☐) Certifying Entity:** **(no ☑)**

If the bidder's method of compliance with the DBE goal is based upon demonstration of a "good faith effort", the bidder will have the burden of correctly and accurately preparing and submitting the documentation required by the DCTA. Compliance with items 1 through 6 as it appears on the Good Faith Effort Form, in its entirety shall satisfy the good faith effort requirement upon verification by DCTA's staff and confirmation of no counterfeit information, intentional and/or knowing misrepresentation of facts or intentional discrimination by the contractor.

Failure to complete this form, in its entirety with supporting documentation, and received by the DBE Liaison, will result in the bid being considered non-responsive to bid specifications. Please list each and every subcontracting and/or supplier opportunity for the completion of this project, regardless of whether it is to be provided by a DBE or non-DBE. (DO NOT LIST NAMES OF FIRMS).

1. Please list each and every (subcontracting and/or supplier opportunity) for the completion of this project, regardless of whether it is to be provided by a DBE or non DBE (DO NOT LIST NAMES OF FIRMS). **List opportunities only**.

(Use additional sheets, if necessary)

List of Subcontracting Opportunities:	List of Supplier Opportunities:
None	

2. Did you obtain a current (**not more than 60 days old from the initial response to the DCTA's solicitation due date)** list of DBE subcontracts and/or suppliers from the DCTA DBE Liaison?

   (yes ☐) (no ☑)

   DBE listing request date to the DCTA DBELO :_ //**20**

3. Did you solicit bids from DBE firms, within the subcontracting and/or supplier areas previously listed by mail?

   (yes ☐) (no ☑)

   Attach the DBE mail listing including a dated copy of the letter mailed, or email correspondence showing proof of solicitation to DBE firms. **If you did not fulfill, please write the following statement: "I did not comply"**

4. Did you solicit bids from DBE firms within the subcontracting and/or supplier areas previously listed by telephone?

   (yes ☐) (no ☑)

   Attach DBE contact list to include: DBE firm, person contacted, telephone number, date and time of contact. **If you did not fulfill, please write the following statement: "I did not comply"**

   NOTE: A facsimile may be used to comply with either 3 or 4 but may **not** be used for both. If a facsimile is used, attach the fax confirmation, which is to provide: DBE name, date, time, fax number and documentation faxed.

   NOTE: If the list of DBE firms for a particular subcontracting/supplier opportunity is ten (10) or less, the contractor must contact the entire list to be in compliance with item 3 and 4. If the list of DBE firms for a particular subcontracting/supplier opportunity is ten (10) or more, the contractor must contact at least two/thirds (2/3) of the list within such area of opportunity, but not less than ten to be in compliance with items 3 and 4.

5. Did you provide plans and specifications to potential DBE firms or information regarding the location of plans and specifications in order to assist the DBE firms?

   (yes ☐) (no ☑)

6. Submit documentation if DBE firms were rejected. The documentation submitted should be in the form of an affidavit, include a detailed explanation of why the DBE firms were rejectedand any supporting documentation the contractor wishes to be considered by the DCTA. In the event of an actual dispute concerning quotes, the contractor will provide for confidential access to and inspection of any relevant documentation by DCTA Legal representative. (**Please use additional sheets, if necessary and attach**)

Company Name	Telephone	Contact Person	Scope of Work	Reason for Rejection
Not Applicable				

ADDITIONAL INFORMATION:

Please provide additional information you feel will further explain your good and honest efforts to

obtain DBE participation on this project

The bidder further agrees to provide, directly to the DCTA upon request, complete and accurat information regarding actual work performed on this contract, the payment thereof and an proposed changes to the original arrangements submitted with this bid. The bidder also agrees t allow an audit and/or examination of any books, records and files held by their company that wi substantiate the actual work performed on this contract, by an authorized DCTA employee.
Any intentional and/or knowing misrepresentation of facts will be grounds for terminating the contrac or debarment from DCTA work for a period of not less than three (3) years and for initiating actio under laws concerning false statements. Any breach of contract may result in a determination of a irresponsible offeror and barred from participating in DCTA work for a period of time not less than on (1) year.

The undersigned certifies that the information provided and the listed was/were contacted in good faith. It is understood that any DBE firms listed on the Good Faith Effort Form will be contacted and the reasons for not using them will be verified by the DCTA DBELO.

Authorized Signature:	Printed Signature: Becky Huff
Title: Contract Manager	Contact Name and Title (if different):
Company Name: Muncie Reclamation and Supply dba Muncie Transit Supply	Phone Number: (765) 288-1971
Street Address: 3720 S. Madison St.	Email Address:
City/County/State and Zip Code Muncie, Delaware IN. 47302	Date: April, 29 20 20
DCTA DBELO Authorized Signature:	Date: , 20

Board of Directors Memo

July 23, 2020

SUBJECT: City of Coppell Lyft Contract Renewal

Background

DCTA and the City of Coppell approved an Interlocal Agreement in August 2019 to deploy a 12-month pilot program to serve the workforce mobility needs of the west side business park beginning on October 1, 2019. The service is operated by Lyft through a task order with DCTA and provides first/last mile connectivity between area transit stops and Coppell's business and warehouse center. The current ILA is included as Exhibit 1.

The pilot program, and associated ILA, expires September 30, 2020. City staff held a discussion with the Coppell City Council in June, during which the council requested staff work with DCTA to renew the ILA for another 12-month program from October 1, 2020 through September 30, 2021. The City Council has been informed of DCTA's Administrative Fee Policy (Exhibit 2) that was adopted in April 2020, which would result in an increase to their administrative fee.

The original ILA budget of $100,000 includes 100% of direct Lyft costs and a 25% administrative fee to cover contract management, billing, administration, reporting, data analytics, and customer service. The City of Coppell is responsible for primary marketing and outreach efforts. Unless otherwise directed, staff intends to negotiate an amended ILA to include a 60% administrative fee, consistent with the DCTA Board of Directors Administrative Policy, for an additional 12-month period. To keep within the budget of $100,000 this would amend the costs as follows:

AGENCY	Service Rendered	Project Cost Allocation Per Year $100,000
Denton County Transportation Authority	Contracted Mobility Provider Service: *Direct invoiced costs*	Not-to-exceed ~~$72,000/75%~~ $56,250
	Administrative Fee: *Contract management, billing, administration, reporting, data analytics, and customer service*	Not-to-exceed ~~$18,000/25% of the direct invoiced costs~~ $33,750/60% of the direct invoiced costs
		TOTAL: $90,000
City of Coppell	Marketing and Outreach	Not-to-exceed $10,000/10% *of the total allocated cost*
		PROJECT TOTAL: $100,000

The service currently averages a direct cost of $1,400 and 154 trips per month (excluding the first month of service as an outlier). As such, the new budget would continue to be sufficient to cover all direct invoiced costs.

Identified Need

Coppell is home to a number of large warehouse and distribution facilities, which employ predominately low-wage positions. Because Coppell does not have affordable housing and limited public transportation (SPAN provides contracted paratransit services), these businesses face recruitment and retention issues like many of our partner areas. Lyft serves to fill the first/last mile need of Coppell's low-wage workforce, many of whom currently use public transportation. Due to the success of the program, the City of Coppell City Council has publicly expressed interest in continuing the program for another 12-month period.

Financial Impact

There is a positive financial impact to the budget with the administrative fee increasing from 25% in year one to 60% in year two per the DCTA Board's Administrative Fee Policy. The budget for indirect costs would then increase from $18,000 to $33,750, as detailed in the above table.

Recommendation

Staff recommends the Board of Directors direct staff to proceed with amending the Interlocal Agreement with City of Coppell for Mobility Services, that includes a renegotiated budget and one-year extension, to be brought to the Board for consideration in August.

Exhibits

Exhibit 1 – Interlocal Agreement with City of Coppell
Exhibit 2 – Administrative Fee Policy

Submitted By: _____
Lindsey Baker, Director of Government Affairs

Final Review: _____
Nicole Recker, VP of Mobility Services and Administration

Approval: _____
Raymond Suarez, CEO

STATE OF TEXAS	§	
	§	**INTERLOCAL COOPERATION**
	§	**AGREEMENT**
COUNTY OF DENTON	§	

This Interlocal Cooperation Agreement ("Agreement") is made by and between Denton County Transportation Authority ("DCTA") and the City of Coppell, Texas ("Coppell"), (each a "Party" and collectively the "Parties"), acting by and through their authorized representatives.

RECITALS

WHEREAS, Coppell is a home-rule municipality and local governmental entity located within the State of Texas and in the counties of Dallas and Denton; and

WHEREAS, DCTA is a coordinated county transportation authority created under Chapter 460 of the Texas Transportation Code; and

WHEREAS, Coppell desires to partner with DCTA to provide transportation services to meet the mobility needs of Coppell businesses and residents; and

WHEREAS, the Parties are authorized to enter into this Agreement pursuant to the Interlocal Cooperation Act ("Act"), Chapter 791, Texas Government Code; and

WHEREAS, DCTA and Coppell are units of local government that have the statutory authority under the Act to perform the services set forth in this Agreement; and

WHEREAS, pursuant to Chapter 460 of the Texas Transportation Code, DCTA is authorized to enter into this Agreement with Coppell to provide transportation services; and

WHEREAS, the Parties have agreed on the terms and conditions for DCTA to deploy first/last mile mobility solutions to the business park located in the western quadrant of Coppell and between transit stations located outside of the city limits, as set forth in Section 3.1(b) of this Agreement, through use of a mobility provider; and

NOW, THEREFORE, for and in consideration of the mutual promises and covenants set forth in this Agreement, and other valuable consideration, the receipts and sufficiency of which is hereby acknowledged, the Parties agree as follows:

Article I
Purpose

1.1 The purpose of this Agreement is to provide for the administration and operation of mobility services to improve access to jobs within the business park located in the western quadrant of Coppell for trips originating in a defined geofence to destinations located in the geofence and to/from designated transit stops as defined in section 3.1(b). Mobility

services may include DCTA directly providing transportation to employees and residents in Coppell or through third-party service providers that directly contract with DCTA, including but not limited to taxi providers and transportation network companies (TNCs).

1.2 DCTA may execute a task order for a period not to exceed twelve (12) months with a contracted mobility provider (e.g. Lyft) to deploy first/last mile mobility services in the city limits of Coppell and as defined in section 3.1(b) The hours and days of operation shall be agreed upon by the Parties and adjusted based on ridership.

1.3 DCTA has entered into an appropriate mobility services provider agreement to provide their services herein; and, DCTA shall receive assurances under such agreement regarding the services provided herein; and, Coppell's sole responsibility shall be to fund such services.

Article II
Term

2.1 Initial Term. The Initial Term of this Agreement shall begin on October 1, 2019 and continue for the period ending on September 30, 2020 unless sooner terminated as provided herein (the "Initial Term"). After the Initial Term providing for a one (1) year pilot program, this agreement shall automatically renew on the same terms and conditions for an additional period of one (1) year ("the Renewal Term"), unless either Party provides to the other Party written notice of non-renewal at least sixty (60) days prior to the termination of the Initial Term.

2.2 Termination. Either Party may terminate this Agreement, with or without cause, by giving sixty (60) days prior written notice to the other Party. After the Initial Term, the required notice to terminate shall be at least ninety (90) days.

Article III
Services

3.1 DCTA shall provide the Mobility Services as follows:

(a) Beginning on October 1, 2019, DCTA shall deliver the Mobility Services during the hours and days of operation as mutually agreed upon by the Parties and based on ridership.

(b) Mobility services will initially be provided generally within the city limits to serve the workforce population and to and from designated transit stops and stations that fall outside the Coppell city limits. Specific parameters will be determined through the Task Order process and in coordination with DCTA and Coppell. Location of mobility services and geofence boundaries may be amended in writing as mutually agreed upon by the Parties and based on ridership trends.

(c) During the term of this Agreement, DCTA shall provide all administrative and operational services associated with the Mobility Services including, but not limited to, employment and management of necessary and sufficient personnel, contract management of third-party providers, billing, customer service, program management, and data reporting and analytics.

(d) During the Term of this Agreement, Coppell shall be responsible for all primary marketing and outreach efforts, with ancillary support provided by DCTA.

Article IV
Compensation and Fees

4.1 DCTA Compensation. DCTA shall be reimbursed for one-hundred percent (100%) of all costs for services invoiced from the mobility provider associated with this agreement, and an administrative fee per the schedule in Exhibit 1. Total costs shall not exceed one-hundred thousand dollars ($100,000) in a twelve (12) month period, unless amended as mutually agreed upon in writing by the parties.

4.2 Invoicing. On or before the last day of each calendar month during the Term of this Agreement, DCTA shall prepare a written invoice to Coppell including number of trips, operating expenses, and administrative management fees for the services provided in the previous month.

4.3 Payment. Coppell shall pay DCTA within thirty (30) days of the receipt of each monthly invoice.

4.4 Current Revenues. To the extent applicable, Coppell and DCTA acknowledge that Coppell shall make payment of the aforementioned sums from current revenues. Coppell further agrees to make all appropriations reasonable and necessary to effectuate the terms of, and its responsibilities under, this Agreement. However, the Parties recognize that the continuation of this Agreement after the close of any given fiscal year of Coppell, September 30 of each calendar year, shall be subject to approval by Coppell's City Council. This approval may be presumed if the City Council includes funding for the Mobility Services in an adopted budget. This Agreement cannot be an unfunded liability of Coppell in violation of the Texas Constitution's unfunded debt prohibition applicable to home-rule cities. Th Parties agree that this Agreement bay be terminated by Coppell with notice as provided herein, without any penalty or liability to Coppell except for monies owed DCTA for Mobility Services provided pursuant to this Agreement and for any costs incurred for demobilization, in the event Coppell's City Council fails to approve or appropriate funds for any continuation of this Agreement.

4.5 Fares. Customers utilizing the first/last mile service will pay a fare that shall be subsidized by Coppell. The subsidy and amount paid by the passenger shall be mutually agreed upon by DCTA and Coppell.

4.6 Additional Services. In an effort to provide the best Mobility Services possible, DCTA may work with additional third-party service providers to enhance service delivery to Coppell. At all times, DCTA shall be responsible for contracting directly with the third-parties and shall be responsible for ensuring the overall customer experience and complying with this Agreement. Furthermore, DCTA shall be responsible for managing the cost of such service providers within the mutually agreed funding authorizations established and approved between DCTA and Coppell.

Article V
Dispute Resolution

The Parties agree to make a good faith effort to resolve through informal discussions any disagreement or other dispute between them in connection with this Agreement (a "Dispute"). If a Dispute cannot be resolved through informal discussions, before seeking an alternative remedy, either Party must submit a written complaint to the other Party setting out the basis of the complaint and a proposed resolution to the Dispute. The Party receiving the complaint must respond in writing within twenty-one (21) days after receipt of the complaint, by accepting the proposed resolution, rejecting the proposed resolution, or proposing an alternative resolution to the Dispute. If the proposed resolution is rejected, the Parties may seek alternative remedies as they deem appropriate. If an alternative resolution is proposed, the recipient of that alternative proposal shall, within twenty-one (21) days after receipt, either accept the alternative or reject it. If it is rejected, the Parties may seek alternative remedies as they deem appropriate. Subject to the procedure outlined in this section, both Parties will have all legal remedies allowed to them by applicable law. The provisions of this section are strictly limited in scope to serve as a prerequisite to the enforcement of remedies under this Agreement. Failure by either Party to raise a Dispute through this process shall not constitute waiver or acceptance of an alleged violation of this Agreement.

Article VI
Insurance

During the Term of this Agreement, the mobility provider shall maintain enforce during the Term, at the mobility provider's own expense, at least the following coverages:

(a) Workers' Compensation Insurance in accordance with state statutory laws, including Employers' Liability with minimum limits of $1,000,000 each Accident;

(b) Commercial General Liability Insurance including, but not limited to, product and completed operations, personal and advertising injury and contractual liability coverage with minimum limits of $1,000,000 Each Occurrence; $2,000,000 General Aggregate; and

(c) Commercial Auto Liability Insurance including a minimum combined single limit of $1,000,000 each accident and Uninsured/Underinsured motorist coverage with a minimum combined single limit of $1,000,000.

The mobility provider will include Coppell as an additional insured via blanket endorsement under the mobility provider's commercial general liability insurance policy. All policies maintained shall be written as primary policies, not contributing with and not supplemental to coverage Coppell may carry and will contain a waiver of subrogation against Coppell and its insurance carrier(s) with respect to all obligations assumed by the mobility provider under this Agreement. The fact that the mobility provider has obtained the insurance required hereunder shall in no manner lessen or otherwise affect such mobility provider's other obligations or liabilities set forth in this Agreement.

Article VII
Miscellaneous

7.1 Entire Agreement. This Agreement constitutes the sole and only agreement between the Parties and supersedes any prior understandings written or oral agreements between the Parties with respect to this subject matter.

7.2 Assignment. This Agreement may not be assigned by either Party without the prior written consent of the other Party.

7.3 Successors and Assigns. Subject to the provisions regarding assignment, this Agreement shall be binding on and inure to the benefit of the Parties to it and their respective heirs, executors, administrators, legal representatives, successors and permitted assigns.

7.4 Governing Law. The laws of the State of Texas shall govern this Agreement; and venue for any action concerning this Agreement shall exclusively be in the State District Court of Denton County, Texas. The Parties agree to submit to the personal and subject matter jurisdiction of said court.

7.5 No Waiver of Liability. The Parties acknowledge that neither Party is an agent, servant, or employee of the other Party, and each Party agrees it is responsible for its own individual negligent acts or omissions or other tortious conduct, as well as such acts and deeds of its contractors, agents, representatives, and employees, during the performance of this Agreement without waiving any governmental immunity available to the Parties under Texas law and other applicable law, and without waiving any available defenses under Texas law and other applicable law. Further, in the execution and performance of this Agreement, the Parties do not waive, and neither Party shall be deemed to have waived, any other immunity or defense that would otherwise be available to each Party as a local governmental entity and/or political subdivision of the State of Texas.

7.6 Amendments. This Agreement may be amended by the mutual written agreement of the Parties. Severability. In the event any one or more of the provisions contained in this Agreement shall for any reason be held to be invalid, illegal, or unenforceable in any respect, such invalidity, illegality or unenforceability shall not affect any other provisions, and the

7.7 Severability. In the event any one or more of the provisions contained in this Agreement shall for any reason be held to be invalid, illegal, or unenforceable in any respect, such invalidity, illegality or unenforceability shall not affect any other provisions, and the Agreement shall be construed as if such invalid, illegal, or unenforceable provision had never been contained in it.

7.8 Notice. Any notice required or permitted to be delivered hereunder may be sent by first class mail, overnight courier or by confirmed telefax or facsimile to the address specified below, or to such other Party or address as either Party may designate in writing, and shall be deemed received three (3) days after delivery set forth herein:

If intended for DCTA:

Raymond Suarez
Chief Executive Officer
DCTA
1955 Lakeway Drive, Suite 260
Lewisville, Texas 75067
Phone: 972-221-4600

With Copy to:

Joseph J. Gorfida, Jr.
Nichols, Jackson, Dillard, Hager & Smith, L.L.P.
1800 Ross Tower, 500 North Akard
500 North Akard
Dallas, Texas 75201
Phone: 214-965-9900

If intended for City of Coppell:

Mike Land
City Manager
255 Parkway Blvd.
Coppell, Texas 75019
Phone: 972-304-3618

7.9 Counterparts. This Agreement may be executed by the Parties hereto in separate counterparts, each of which when so executed and delivered shall be an original, but all such counterparts shall together constitute one and the same instrument. Each counterpart may consist of any number of copies hereof each signed by less than all, but together signed by all of the Parties hereto.

7.10 Exhibits. The Exhibits attached hereto are incorporated herein.

7.11 Recitals. The recitals to this Agreement are incorporated herein and made a part hereof for all purposes.

7.12 Authorization. Each Party represents that it has full capacity and authority to grant all rights and assume all obligations that are granted and assumed under this Agreement.

7.13 Survival of Covenants. Any of the representations, warranties, covenants, and obligations of the Parties, as well as any rights and benefits of the Parties, pertaining to a period of time following the termination of this Agreement shall survive termination hereof.

7.14 Approval of Parties. Whenever this Agreement requires or permits the approval or consent to be given by a Party, the Parties agree that such approval or consent shall not be unreasonably withheld, conditioned or delayed.

7.15 No Third-Party Beneficiary. Nothing in this Agreement shall be construed as creating or giving rise to any rights of third-parties or any persons other than the Parties hereto.

7.16 Recordkeeping and Right to Inspect Records. Each Party shall have mutual access to, and the right to examine, all books, documents, papers, and other records of the other Party involving transactions relating to this Agreement. Each Party shall have access during normal business hours to all necessary facilities and shall be provided adequate and appropriate work space in order to conduct audits in compliance with the provisions of this Agreement. Each Party shall give the other Party advanced written notice of at least forty-eight (48) business hours of intended audits.

(signature page to follow)

EXECUTED this 24th day of September, 2019.

Denton County Transportation Authority

By: _____
Raymond Suarez, Chief Executive Officer

APPROVED AS TO FORM:

By: _____
Joseph J. Gorfida, Jr., General Counsel
(08-05-2019:TM109875)

EXECUTED this 29th day of August, 2019.

City of Coppell, Texas
a home-rule municipality

By: _____
Mike Land, City Manager

APPROVED AS TO FORM:

By: _____
Robert E. Hager, Coppell City Attorney

EXHIBIT 1

AGENCY	Service Rendered	Project Cost Allocation Per Year $100,000
Denton County Transportation Authority	Contracted Mobility Provider Service: *Direct invoiced costs*	Not-to-exceed $72,000/75%
	Administrative Fee: *Contract management, billing, administration, reporting, data analytics, and customer service*	Not-to-exceed $18,000/25% *of the direct invoiced costs* TOTAL: $90,000
City of Coppell	Marketing and Outreach	Not-to-exceed $10,000/10% *of the total allocated cost* PROJECT TOTAL: $100,000

Administrative Fee Policy

Section 1: Purpose

The purpose of this policy is to establish guidelines regarding contract service agreements for service provided by DCTA.

Section 2: Policy Statement

DCTA provides public transportation alternatives to improve mobility, air quality, economic development and livability in the areas it serves. DCTA supports utilization of these services through contracts in partnership with Universities, Colleges and with entities outside of the existing member city area but expects reasonable compensation.

Section 3: Administration

Contracts for service delivered to local Universities and Colleges, within member cities must recover a minimum of 75% of total operating and capital costs. Contracts for services delivered outside member cities must recover 100% of total operating and capital costs.

An overhead percentage shall be calculated annually based on DCTA's cost allocation model to determine the percentage of allocated, indirect costs in proportion to direct costs. A three percent (3%) fee shall be added to this overhead percentage for all contract services delivered outside member cities. This calculated overhead percentage, plus 3%, shall be used as the Administrative Fee added to direct costs. In no case shall the Administrative Fee be less than 60% without prior approval of the DCTA Board of Directors.

The President/CEO or designee is authorized to implement this policy and to issue more detailed procedures to facilitate implementation of the policy as needed. All agreements developed under this policy and any proposed deviations from this policy will be brought to the Board for prior review and approval.

Board of Directors Memo July 23, 2020

SUBJECT: Irving Holdings MUTD Task Order

Background

The current Irving Holdings Task Order 2, for MUTD taxi operations with a budget of $137,000, expires September 30, 2020. In addition, the MUTD Board has requested the current taxi voucher/subsidy program, operated by Irving Holdings, shift to a flat rate fare program. This requires a programmatic amendment to the task order. Staff will have the draft Task Order 3 prepared for the Board's review and consideration at the August board meeting for a term of one-year and a budget of $184,000.

The current Task Order 2 budget of $137,000 is calculated based on on the total cost of Irving Holdings operating taxi service. From October 2019 through June 2020, the invoiced costs of the current task order calculate to $99,526. Excluding COVID decreases in ridership, the trend has been a steady increase in both ridership and, as a result, cost. FY19 costs averaged $11,478 per month (~annual spend of $137,736). Pre-COVID, FY20 was averaging $15,415 per month from October 2019 through February 2020 (~annual spend of $184,980). As such, staff is recommending a $47,000 increase for Task Order 3, with a total FY21 budget of $184,000. An administrative fee would be charged directly to MUTD on top of the $184,000.

Identified Need

The MUTD Board voted to implement a $3 flat fare for Irving Holdings taxi services. In addition, the current budget is insufficient for FY21, assuming ridership will return to pre-COVID levels. As such, staff recommends executing Task Order 3 to accommodate the programmatic and budgetary changes necessary to the continued success of MUTD's taxi voucher program provided by Irving Holdings.

Financial Impact

The Task Order 3 budget would increase by $47,000, from $137,000 to $184,000 to accommodate the high usage of the service. DCTA will be fully reimbursed by the City of McKinney for the Irving Holdings service including appropriate administrative fees.

Recommendation

Staff recommends the Board provide direction to proceed with the development of Task Order 3 for Board consideration in August for a term of one year, a budget of $184,000, and appropriate administrative fees to align with the DCTA Board's Administrative Fee Policy.

Exhibits

Exhibit 1: Irving Holdings Parent ILA
Exhibit 2: Task Order 1
Exhibit 3: Task Order 2

Submitted By: L Baker

Lindsey Baker, Director of Government Affairs

Final Review: _____
Nicole Recker, VP of Mobility Services and Administration

Approval: _____
Raymond Suarez, CEO

STATE OF TEXAS §
§ **AGREEMENT FOR ON-CALL TAXI AND NON-**
§ **EMERGENCY TRANSPORTATION SERVICES**
COUNTY OF DENTON §

This Agreement for On-Call Taxi and Non-Emergency Transportation Services ("Agreement") is made by and between Denton County Transportation Authority ("DCTA") and Irving Holdings, Inc. ("Contractor") (collectively referred to as "Parties" and individually as a "Party"), acting by and through their authorized representatives.

Recitals:

WHEREAS, DCTA desires to engage the services of Contractor as an independent contractor and not as an employee in accordance with the terms and conditions set forth in this Agreement; and

WHEREAS, Contractor desires to render on-call and non-emergency transportation services, subsidized in whole or in part by DCTA, to areas where existing fixed route transportation service cannot be supported, as more fully set forth in Exhibit "A" and Exhibit "B", attached hereto and incorporated herein, and in accordance with the terms and conditions set forth in this Agreement;

NOW THEREFORE, in exchange for the mutual covenants set forth herein and other valuable consideration, the sufficiency and receipt of which is hereby acknowledged, the parties agree as follows:

Article I
Term

1.1 The Initial Term of this Agreement shall commence on the last day of execution hereof (the "Effective Date") and continue for a period of two (2) years, unless sooner terminated as provided herein.

1.2 This Agreement shall automatically renew for three (3) additional one (1) year terms (each a "Renewal Term") unless either Party provides written notice to the other Party of its intent not to renew the Agreement sixty (60) days prior to the expiration of the Initial Term or Renewal Term, as the case may be.

1.3 Either Party may terminate this Agreement by giving sixty (60) days prior written notice to the other Party. In the event of such termination, Contractor shall be entitled to compensation for any services completed up to the time of the termination.

Article II
Contract Documents

2.1 This Agreement consists of the following items:

A. This Agreement;

B. DCTA Solicitation RFP 17-27 "On-Call Taxi and Non-Emergency Transportation Services" and all addenda thereto, ("DCTA RFP 17-27"), (attached as Exhibit "A"); and

C. Contractor's Response to DCTA RFP 17-27 (attached as Exhibit "B").

2.2 In the event there exists a conflict in interpretation, the documents shall control in the order listed above. These documents shall be referred to collectively as "Contract Documents".

Article III
Scope of Work

Contractor shall provide the services specifically set forth in Exhibit "A" and Exhibit "B".

Article IV
Schedule of Work

Contractor agrees to commence services upon written direction from DCTA and to complete the required services in accordance with a work schedule established by mutual agreement of both DCTA and Contractor (the "Work Schedule"). Any work performed or expenses incurred by Contractor prior to Contractor's receipt of a written Notice to Proceed from DCTA shall be entirely at Contractor's own risk.

Article V
Pricing; Subsidization

Contractor's estimated fare charges for each service product are set forth in Exhibit "B". DCTA shall subsidize, in part or in whole, the total trip cost for each qualifying one-way trip.

Article VI
Devotion of Time; Personnel; and Equipment

6.1 Contractor shall devote such time as reasonably necessary for the satisfactory performance of the work under this Agreement. Should DCTA require additional services not included under this Agreement, Contractor shall make reasonable efforts to provide such additional services at mutually agreed charges or rates, and within the time schedule prescribed by DCTA, and without decreasing the effectiveness of the performance of services required under this Agreement.

6.2 To the extent reasonably necessary for Contractor to perform the services under this Agreement, Contractor shall be authorized to engage the services of any agents, assistants, persons, or corporations that Contractor may deem proper to aid or assist in the performance of

the services under this Agreement. The cost of such personnel and assistance shall be borne exclusively by Contractor.

6.3 Contractor shall furnish the facilities, equipment, telephones, facsimile machines, email facilities, and personnel necessary to perform the services required under this Agreement unless otherwise provided herein.

Article VII
Relationship of Parties

It is understood and agreed by and between the Parties that in satisfying the conditions of this Agreement, Contractor is acting independently, and that DCTA assumes no responsibility or liabilities to any third party in connection with these actions. All services to be performed by Contractor pursuant to this Agreement shall be in the capacity of an independent contractor, and not as an agent or employee of DCTA. Contractor shall supervise the performance of its services and shall be entitled to control the manner and means by which its services are to be performed, subject to the terms of this Agreement. As such, DCTA shall not: train Contractor, require Contractor to complete regular oral or written reports, require Contractor devote its full-time services to DCTA, or dictate Contractor's sequence of work or location at which Contractor performs its work.

Article VIII
Insurance

Contractor shall provide and maintain for the duration of this Agreement, and for the benefit of DCTA (naming DCTA and its officers, agents and employees as additional insureds), insurance coverage as set forth in Exhibit "A". Contractor shall provide signed Certificates of Insurance verifying that Contractor has obtained the required insurance coverage for DCTA prior to the Effective Date of this Agreement.

Article IX
Availability of Funds

If monies are not appropriated or otherwise made available to support continuation of performance in a subsequent fiscal period, this Agreement shall be canceled and Contractor may only be reimbursed for the reasonable value of any non-recurring costs incurred but not amortized in the price of services delivered under this Agreement or which are otherwise not recoverable. The cost of cancellation may be paid from any appropriations for such purposes.

Article X
FTA Contractual Requirements

Contractor shall comply with all Federal Transportation Administration requirements set forth in Exhibit "A".

Article XI
Miscellaneous

11.1 Entire Agreement. This Agreement constitutes the sole and only agreement between the Parties and supersedes any prior understandings, written or oral agreements between the Parties with respect to this subject matter.

11.2 Authorization. Each Party represents that it has full capacity and authority to grant all rights and assume all obligations granted and assumed under this Agreement.

11.3 Assignment. Contractor may not assign this Agreement in whole or in part without the prior written consent of DCTA. In the event of an assignment by Contractor to which DCTA has consented, the assignee shall agree in writing with DCTA to personally assume, perform, and be bound by all the covenants, and obligations contained in this Agreement.

11.4 Successors and Assigns. Subject to the provisions regarding assignment, this Agreement shall be binding on and inure to the benefit of the Parties to it and their respective heirs, executors, administrators, legal representatives, successors and assigns.

11.5 Governing Law. The laws of the State of Texas shall govern this Agreement; and venue for any action concerning this Agreement shall be in the State District Court of Denton County, Texas. The Parties agree to submit to the personal and subject matter jurisdiction of said court.

11.6 Amendments. This Agreement may be amended by the mutual written agreement of the Parties.

11.7 Severability. In the event any one or more of the provisions contained in this Agreement shall for any reason be held to be invalid, illegal, or unenforceable in any respect, such invalidity, illegality or unenforceability shall not affect any other provisions, and the Agreement shall be construed as if such invalid, illegal, or unenforceable provision had never been contained in it.

11.8 Survival of Covenants. Any of the representations, warranties, covenants, and obligations of the Parties, as well as any rights and benefits of the Parties, pertaining to a period of time following the termination of this Agreement shall survive termination.

11.9 Recitals. The recitals to this Agreement are incorporated herein.

11.10 Notice. Any notice required or permitted to be delivered hereunder may be sent by first class mail, overnight courier or by confirmed telefax or facsimile to the address specified below, or to such other Party or address as either Party may designate in writing, and shall be deemed received three (3) days after delivery set forth herein:

If intended for DCTA:

James C. Cline, Jr., P.E.
President
DCTA
1660 S. Stemmons, Suite 250
Lewisville, Texas 75067
Phone: 972-221-4600

With Copy to:

Peter G. Smith
Nichols, Jackson, Dillard, Hager & Smith, L.L.P.
1800 Ross Tower
500 North Akard
Dallas, Texas 75201
Phone: 214-965-9900

If intended for Contractor:

Jack D. Bewley
President
Irving Holdings, Inc.
2515 Irving Boulevard
Dallas, Texas 75207
Phone: 817-534-7777

11.11 Counterparts. This Agreement may be executed by the Parties hereto in separate counterparts, each of which when so executed and delivered shall be an original, but all such counterparts shall together constitute one and the same instrument. Each counterpart may consist of any number of copies hereof each signed by less than all, but together signed by all of the Parties hereto.

11.12 Exhibits. The exhibits attached hereto are incorporated herein and made a part hereof for all purposes.

11.13 Indemnification. **CONTRACTOR AGREES TO RELEASE AND BE LIABLE FOR AND TO DEFEND, INDEMNIFY AND SAVE HARMLESS DCTA, ITS BOARD MEMBERS, OFFICERS, AGENTS, SERVANTS, WORKMEN, EMPLOYEES, SUBSIDIZERS AND INDEMNITIES, U.S. DEPARTMENT OF TRANSPORTATION, TEXAS DEPARTMENT OF TRANSPORTATION, DENTON COUNTY AND ALL GOVERNMENT FUNDING AGENCIES PROVIDING FUNDS OR SERVICES IN CONNECTION WITH THIS PROJECT (HEREINAFTER COLLECTIVELY REFERRED TO AS "DCTA"), FROM AND AGAINST ANY AND ALL LOSS, COST, DAMAGE, LIABILITY AND EXPENSE, INCLUDING CONSEQUENTIAL DAMAGES, COUNSEL FEES, WHETHER OR NOT ARISING OUT OF ANY CLAIM, SUIT OR ACTION AT LAW, IN EQUITY, OR OTHERWISE, OF ANY KIND OR NATURE WHATSOEVER, INCLUDING NEGLIGENCE, ARISING OUT OF THE PERFORMANCE OF THE WORK BY REASON OF ANY ACCIDENT, LOSS OR DAMAGE OF PROPERTY, INCLUDING THE WORK SITE, PROPERTY OF DCTA AND CONTRACTOR, OR INJURY, INCLUDING DEATH, TO ANY PERSON OR PERSONS, INCLUDING EMPLOYEES OF DCTA, CONTRACTOR, SUBCONTRACTORS AT ANY TIER OR ANY PERSON WORKING ON CONTRACTOR'S BEHALF, CAUSED BY CONTRACTOR, WHICH MAY BE SUSTAINED EITHER DURING THE TERM OF THE CONTRACT, OR UPON OR**

AFTER COMPLETION OF THE CONTRACT, WHETHER BROUGHT DIRECTLY BY THESE PERSONS OR BY ANYONE CLAIMING UNDER OR THROUGH THEM INCLUDING HEIRS, DEPENDENTS AND ESTATES.

CONTRACTOR ALSO AGREES FOR ITSELF AND ON BEHALF OF ITS AGENTS, SERVANTS, SUBCONTRACTORS, MATERIAL MEN, AND EMPLOYEES TO DEFEND, INDEMNIFY AND HOLD HARMLESS DCTA FROM AND AGAINST ANY AND ALL CLAIMS OF ANY KIND OR NATURE WHATSOEVER REGARDING SUBCONTRACTORS AND MATERIAL MEN AND AGREES TO ASSUME THE DEFENSE OF DCTA TO ANY SUCH SUIT AT ITS COST AND EXPENSE.

CONTRACTOR, FOR ITSELF AND ITS EMPLOYEES, BOARD MEMBERS, OFFICERS, AGENTS, SERVANTS, WORKMEN, CONTRACTORS, SUBCONTRACTORS, LICENSEES AND INVITEES, OR ANY OTHER PERSON WORKING ON CONTRACTOR'S BEHALF, HEREBY RELEASES AND AGREES TO BE LIABLE FOR AND TO DEFEND, INDEMNIFY AND SAVE HARMLESS DCTA, EXCEPT TO THE EXTENT THAT DCTA IS NEGLIGENT IN WHOLE OR IN PART, FOR ANY CLAIMS MADE BY AN EMPLOYEE, BOARD MEMBER, OFFICER, AGENT, WORKMAN OR SERVANT OF CONTRACTOR'S OR ANY OTHER PERSON WORKING ON CONTRACTOR'S BEHALF, INCLUDING CLAIMS FOR COMPENSATION OR BENEFITS PAYABLE TO ANY EXTENT BY OR FOR CONTRACTOR UNDER ANY WORKERS' OR SIMILAR COMPENSATION ACTS OR OTHER EMPLOYEE BENEFIT ACTS. IN THE EVENT OF JOINT OR CONCURRENT NEGLIGENCE OF THE CONTRACTOR AND DCTA, RESPONSIBILITY, IF ANY, SHALL BE APPORTIONED COMPARATIVELY IN ACCORDANCE WITH THE LAWS OF THE STATE OF TEXAS. CONTRACTOR'S OBLIGATIONS UNDER THIS SECTION SHALL NOT BE LIMITED TO THE LIMITS OF COVERAGE OF INSURANCE MAINTAINED OR REQUIRED TO BE MAINTAINED BY CONTRACTOR UNDER ANY RESULTANT AGREEMENT. THIS PROVISION SHALL SURVIVE THE TERMINATION OF ANY RESULTANT AGREEMENT.

CONTRACTOR'S INDEMNITY OBLIGATIONS UNDER THIS SECTION SHALL ALSO SPECIFICALLY INCLUDE, WITHOUT LIMITATIONS, ALL FINES, PENALTIES, DAMAGES, LIABILITY, COSTS, EXPENSES (INCLUDING, WITHOUT LIMITATIONS, REASONABLE ATTORNEY'S FEES), AND PUNITIVE DAMAGES (IF ANY) ARISING OUT OF, OR IN CONNECTION WITH ANY (I) VIOLATION OF OR FAILURE TO COMPLY WITH ANY LAW, STATUTE, ORDINANCE, RULE, REGULATION, CODE OR REQUIREMENT OF A PUBLIC AUTHORITY THAT BEARS UPON THE PERFORMANCE OF THE WORK BY THE CONTRACTOR, A SUBCONTRACTOR, OR ANY PERSON OR ENTITY FOR WHOM EITHER IS RESPONSIBLE; (II) MEANS, METHODS, PROCEDURES, TECHNIQUES, OR SEQUENCES OF EXECUTION OR PERFORMANCE OF THE WORK; AND (III) FAILURE TO SECURE AND PAY FOR PERMITS, FEES, APPROVALS, LICENSES AND INSPECTIONS AS REQUIRED UNDER THE CONTRACT DOCUMENTS, OR ANY VIOLATION OF ANY PERMIT OR OTHER APPROVAL OF A PUBLIC

AUTHORITY APPLICABLE TO THE WORK, BY THE CONTRACTOR, A SUBCONTRACTOR, OR ANY PERSON OR ENTITY FOR WHOM EITHER IS RESPONSIBLE.

CONTRACTOR SHALL INDEMNIFY DCTA FOR ANY FINES AND LEGAL FEES INCURRED BECAUSE EMPLOYEES, AGENTS, OR WORKERS SUPPLIED BY CONTRACTOR ARE NOT AUTHORIZED TO WORK IN THE UNITED STATES.

11.14 Audits and Records. Contractor agrees that during the term hereof DCTA and its representatives may, during normal business hours and as often as deemed necessary, inspect, audit, examine and reproduce any and all of Contractor's records relating to the services provided pursuant to this Agreement for a period of one year following the date of completion of services as determined by DCTA or date of termination if sooner.

11.15 Conflicts of Interests. Contractor represents that no official or employee of DCTA has any direct or indirect pecuniary interest in this Agreement.

11.16 Compliance with Federal, State & Local Laws: Contractor shall comply in performance of services under the terms of this Agreement with all applicable laws, ordinances and regulations, judicial decrees or administrative orders, ordinances, and codes of federal, state and local governments, including all applicable federal clauses.

11.17 Force Majeure. No Party will be liable for any default or delay in the performance of its obligations under this Agreement if and to the extent such default or delay is caused, directly or indirectly, by fire, flood, earthquake, elements of nature or acts of God, riots, civil disorders, acts of terrorism or any similar cause beyond the reasonable control of such party, provided that the non-performing party is without fault in causing such default or delay. The non-performing Party agrees to use commercially reasonable efforts to recommence performance as soon as possible.

(signature page to follow)

EXECUTED this 25TH day of August, 2017.

Denton County Transportation Authority

By: _____
James C. Cline, Jr., P.E., President

Approved as to form:

By: _____
Peter G. Smith, General Counsel
(08-23-2017/89435)

EXECUTED this 24th day of August, 2017.

Irving Holdings, Inc.

By: _____
Name: Jackie D Bewley
Title: President

Solicitation 17-27

On-Call Taxi and Non-Emergency Transportation Services

Bid Designation: Public

Denton County Transportation Authority

Bid 17-27
On-Call Taxi and Non-Emergency Transportation Services

Bid Number	17-27
Bid Title	On-**Call Taxi and Non**-Emergency Transportation Services
Bid Start Date	Jun 22, 2017 5:14:29 PM CDT
Bid End Date	Jul 20, 2017 3:00:00 PM CDT
Question & Answer End Date	Jul 6, 2017 5:00:00 PM CDT
Bid Contact	Jeremy Lewallen Procurement Coordinator jlewallen@dcta.net

Description
DCTA is seeking service proposals for efficient and effective non-emergency medical supplemental transportation services, subsidized in whole or in part through DCTA, to areas where existing fixed route transportation service cannot be supported.

Denton County
Transportation Authority

SOLICITATION OVERVIEW AND ENDORSEMENT

SOLICITATION No./TYPE	17-27 / REQUEST FOR PROPOSALS
TITLE	On-Call Taxi and Non-Emergency Transportation Services

PROCUREMENT SCHEDULE — Dates and times are subject to change, any changes will be issued by addenda.

PRE BID/PROPOSAL MEETING DATE	N/A	PRE BID/PROPOSAL MEETING LOCATION	N/A
QUESTIONS DUE	July 6th, 2017 by 5:00 PM	RESPONSES TO QUESTIONS RELEASED	July 13th, 2017 by 5:00 PM
DUE DATE/TIME	**July 20th, 2017 at 3:00 PM**		

QUESTIONS/ CLARIFICATIONS

All requests for clarifications and questions shall be submitted in writing. No verbal questions will be accepted and no verbal replies will be provided. Bidders/Proposers must submit requests for changes to or approval of equals, clarifications and modifications of the specifications in writing. The solicitation documents can only be modified in writing. Procurement must receive the requests no later than the date indicated above. Procurement will issue a response to those requests to all bidders/proposers by posting the replies to BidSync no later than the date indicated above. DCTA assumes no responsibility for delayed or lost responses

ALL QUESTIONS AND REQUESTS FOR CLARIFICATIONS SHALL BE SENT TO

Jeremy Lewallen
procurement@dcta.net
or submitted via BidSync at www.bidsync.com

RECEIPT OF BID/PROPOSAL

Prior to the time and date indicated above, all bid/proposal packages shall be hand delivered or mailed to Procurement at:

DCTA
1955 Lakeway Drive, Suite 260
ATTN: Jeremy Lewallen
SOLICITATION #: 17-27
Lewisville, Texas 75057

Bid/Proposal packages received after the due time and date shall not be considered and will be returned unopened. All bids/proposals shall be submitted in a sealed package with the company name and RFB/RFP number clearly marked on the outside. The clock in the reception area of DCTA is the official time for receipt of bids. Bids/Proposals submitted to other DCTA locations may be returned unopened and will not be considered in the award of the contract.

DCTA reserves the right to change the deadline for submitting bids/proposals. Further, DCTA reserves the right to unilaterally revise or amend the scope of services up to the time set for submitting bids/proposals. Such revisions and addenda, if any, shall be announced by addenda to this solicitation. Copies of such addenda shall be furnished to all prospective bidders/proposers.

ACCEPTANCE PERIOD — **BIDS/PROPOSALS SHALL REMAIN VALID FOR 60 DAYS FROM THE DUE DATE**

DBE (DISADVANTAGED BUSINESS ENTERPRISE) PROGRAM

It is the policy of DCTA to create a level playing field on which DBEs, as defined in 49 CFR Part 26, can compete fairly for DOT-assisted contracts. Additionally, DCTA is committed to removing barriers to the participation of DBEs on DOT-assisted contracts. The DBE requirements of 49 CFR Part 26 applies to this procurement. By submitting its bid/proposal, Bidder/Proposer certifies that it will take all necessary and reasonable steps in accordance with 49 CFR Part 26 to ensure that DBEs are given the maximum opportunity to compete for and participate in the performance of this contract. Bidder/Proposer further certifies and agrees that it has not and will not discriminate on the basis of race, color, national origin, or sex in the award of subcontracts under this contract or in performance of this contract. DCTA's DBE Program is available at www.dcta.net

DBE GOAL — ☐**yes** ☒**no** **DBE goal N/A**

DAVIS-BACON AND COPELAND ANTI-KICKBACK

The Davis-Bacon and Copeland Acts are codified at 40 USC 3141, et seq. and 18 USC 874. The Acts apply to grantee construction contracts and subcontracts that "at least partly are financed by a loan or grant from the Federal Government." 40 USC 3145(a), 29 CFR 5.2(h), 49 CFR 18.36(i) (5).The Acts apply to any construction contract over $2,000. 40 USC 3142(a), 29 CFR 5.5(a). 'Construction,' for purposes of the Acts, includes "actual construction, alteration and/or repair, including painting and decorating of public buildings and public works of the Government." 29 CFR 5.5(a).

CERTIFIED PAYROLL — ☐**yes** ☒**no** **Wage Rate N/A**

BID/PROPOSAL ENDORSEMENT — **TO BE COMPLETED FOR HAND DELIVERED AND MAILED RESPONSES ONLY**

BUSINESS NAME			
CONTACT NAME		TITLE	
TELEPHONE		EMAIL	
ADDRESS			
SIGNATURE		**DATE**	

SCOPE OF WORK, TERMS AND CONDITIONS

1. CONTRACT

Submission of a proposal constitutes an offer to perform the work specified and to be bound by the terms contained or referenced herein. Upon acceptance of the offer, and upon award of the Contract to the successful offeror (if any), this procurement solicitation document (entitled "Request for Proposal") together with the completed and executed forms required herein, and all attachments hereto, together with the contract shall collectively constitute the Contract documents.

2. CONTRACT TERM

The initial term of the contract shall be for two (2) years with the option to renew for three (3) additional one (1) year terms. The contract will automatically renew each year unless either party provides a written notice sixty (60) days prior to the renewal date of their intent not to renew.

3. BACKGROUND

The Denton County Transportation Authority (DCTA) is a coordinated county transportation authority created by House Bill 3323, under Chapter 460 of the Texas Transportation Code, approved by the 77th Texas Legislature and signed into law by the Governor in 2001. On November 5, 2002, the voters in Denton County approved the confirmation of DCTA by 73%. DCTA is funded by a one-half of one percent sales tax from the cities of Lewisville, Highland Village and Denton. DCTA is also a recipient of Federal Transit Administration (FTA) grants.

DCTA currently operates transit service throughout its service delivery area. These services include fixed route services in Lewisville and Denton, general public demand response and limited stop community shuttle service in Highland Village, demand response / paratransit service in Lewisville and Denton, and county-wide commuter vanpool service. DCTA also operates A-train, the commuter rail service connecting to the Dallas Area Rapid Transit (DART) light rail system that serves the greater Dallas area. The agency provides the local campus shuttle service for the University of North Texas and regional campus connectors for the North Central Texas College campuses in Corinth and Flower Mound, and jointly operates a commuter bus connecting Denton and downtown Ft. Worth. DCTA also contracts with the cities of Frisco and McKinney to provide service to older adults and individuals with disabilities through a demand response and taxi voucher service model.

DCTA has regular conversations with both the member communities (Highland Village, Denton, and Lewisville) and neighboring non-member communities about service expansion and delivery. Denton County and surrounding community populations are some of the fastest growing counties in North Texas and are an integral part of region’s rapid growth. With population growth and development comes an increased need for public transportation. While the essential components of DCTA’s services are based on the fixed route bus service and the A-train commuter rail service, it is also part of DCTA’s strategic plan and business model to provide a wide range of transportation solutions to the public. While population in DCTA’s service area is increasing, the area remains, for the most part, a low-density suburban area with limited needs for traditional transit services. While there are some significant concentrations of low-income transit dependent populations that are currently served adequately by fixed route bus and rail service, many communities and neighborhoods within the area have the use of personal vehicles but would like the option of utilizing public transportation for routine trips, regular commutes, and other purposes.

DCTA has developed additional alternative transportation services over the past several years to meet this demand. The authority began a vanpool program in 2010. In 2015, the DCTA developed a

Connect Shuttle service in Highland Village that offers limited-stop service during peak weekday periods, connecting employment centers, parking facilities and other DCTA services that are the main ridership generators in this affluent suburban member community with low density. Providing mobility services for senior populations is a particular challenge in auto-dependent areas where walking or driving can be a safety hazard to those with limited physical abilities. Member and non-member communities have contracted with DCTA to provide transportation services to this market, primarily through a demand response program where customers request trips in advance and are picked up and dropped in specific locations.

4. PROJECT DESCRIPTION

The Denton County Transportation Authority (DCTA), a county-wide transportation authority and political subdivision of the State of Texas, is soliciting proposals from qualified vendors to provide non-emergency medical transportation services in areas where the agency determines that fixed-route traditional transportation services are unavailable and/or not cost effective. Firms selected by DCTA will be contracted to provide service proposals for efficient and effective non-emergency medical supplemental transportation services, subsidized in whole or in part through DCTA, to areas where existing fixed route transportation service cannot be supported.

The selection of vendors will be based in accordance with the evaluation criteria set forth in this document and the procurement requirements of state and federal law. DCTA will identify the most qualified firm(s) and endeavor to negotiate fair and reasonable rate(s) for services to be provided.

5. AGENCY OBJECTIVES

- Provide cost effective transportation services to communities in partnership with DCTA,
- Provide customized transportation solutions to client communities without utilizing agency vehicles or deploying traditional transit products,
- Provide a rapid response when service gaps exist,
- Provide a safe and secure environment for our customers,
- Collect ridership data to identify additional expansion of service with partners.

6. PROJECT SCOPE

DCTA is seeking contractors to provide non-emergency medical transportation services within member and non-member communities in areas where the agency determines that fixed-route traditional transportation services are unavailable and/or not cost-effective and as an alternative to traditional paratransit service. The agency desires to increase the use of non-traditional transit products which allow the agency to respond to the demands of various ridership markets. Specific transportation programs will be determined based on the specific needs of communities and regions through the service planning process DCTA will facilitate. Contractors selected through this RFP process will be qualified to provide customized service proposals to DCTA on an on-call basis.

The following list only represents the minimum requirements. DCTA encourages proposers to recommend additional innovative service features that could meet the agency objectives of this proposal.

7. CUSTOMIZED TRANSPORTATION SERVICE OFFERINGS

Proposal should address the firm's capacity and ability to provide the following:

7.1 Transportation Voucher Program

7.1.1 Work with DCTA, partner organizations, and community staff to develop an electronic voucher program that will allow for customers to easily pay for a ride subsidized by the agency.

7.1.2 Train drivers to process partial subsidies and charge the remainder of the trip cost to the agency based on the specific program proposal.

7.1.3 Work with DCTA to ensure that ride subsidies are documented and billed to agency on a regular basis.

7.1.4 Use available technologies when appropriate, including electronic fare cards and card readers, to ensure fast customer processing and ease of use.

7.2 Supplemental Service

7.2.1 Provide ADA and non-ADA paratransit service utilizing own fleet of accessible vehicles.

7.2.2 Performing prescheduled trips, using a driver manifest provided a day before that will be assigned to a contracted driver.

7.2.3 Provide same-day service via agency dispatch when agency demand-response fleet is at capacity.

7.2.4 Utilize a prequalified list of passengers provided by agency or its partners to provide specific transportation services under agency determined parameters, and train drivers accordingly to qualify passengers and process any fare subsidies.

7.3 Real-Time Demand Response Service

7.3.1 Work with DCTA to expand and enhance existing service through the agency's Demand Response transportation program.

7.3.2 Supplement existing Demand Response trips through contractor's use of own ADA accessible fleet vehicles.

7.3.3 Contract with DCTA to create new real-time demand response transportation programs in areas where DCTA is currently not operating.

7.3.4 Work with DCTA to collect a standard fare for each subsidized ride based on predetermined fare and cost structure for the agency's program while charging agency for the remaining trip amount based on contractor's standard rates and fees.

7.3.5 Provide on-demand ride services to the general public on certain dates and at certain times as determined by DCTA for trips originating or terminating at specified locations and originating or terminating at key locations determined by DCTA and the agency's client communities (i.e., geo-fencing).

7.3.6 Furnish a secure, user-friendly mechanism that allows DCTA to define geographic parameters for trip eligibility and date and time applicability.

7.4 Innovative Transit Solutions

7.4.1 Propose innovative cost-effective and efficient service models that provide non-traditional transit service to all of DCTA's potential markets.

7.4.2 Provide innovative solutions to address transportation market demand that are specifically outlined in previous sections of this scope, utilizing the most cutting edge industry trends that can provide DCTA with new products.

7.4.3 Provide service models that utilize the latest technologies for customer service and ride requests, including the use of mobility apps and smartphone based transportation tools.

7.5 Fare Payment Structures

Service should allow for the following options:

7.5.1 DCTA-provided subsidy toward the total trip cost for each qualifying one-way trip. Subsidy should be flexible and capable of being adjusted based on changing program and budget needs.

7.5.2 Fixed fare for a passenger with the ability for DCTA to subsidize the cost for the remainder of the trip at the regular rates

7.5.3 Deductions of fare from a preloaded passenger account

7.5.4 Fare payment options for unbanked customers

7.5.5 Temporary or promotional fare discounts that passengers can access through the entry of a promotional code

7.6 Policy and Administrative Factors

7.6.1 Ability of Contractor to provide customized on-call transportation services via an agency task order. **Exhibit A** provides a format in which the Task Orders are to be outlined. The agency task order will contain specific service parameters, including but not limited to service areas, service times, and discount / subsidy arrangement.

7.6.2 Ability of Contractor to provide DCTA with ridership reports with invoices and within an agreed upon time frame.

7.6.3 Ridership reports should include but not limited to:

- Trip origin and destination address
- Trip mileage
- Number of passengers/trip
- Fare collected
- Scheduled pick-up and drop-off times
- Actual pick-up and drop-off times
- Trip denials and reason for denial
- And other data as needed to fulfill state and federal reporting requirements

7.6.4 Ability to ensure an adequate service delivery in defined geographic areas and at defined times

7.6.5 Ability to provide support and coordinate with DCTA Communications and Marketing Team to promote programs to the general public and designing and producing marketing materials for distribution to potential riders, as necessary

7.6.6 Availability of additional tracking measures of program success, such as trip information by location, reporting by time period, and trip origin and destination information

7.6.7 Ability of contractor to work within current government regulatory framework for transportation services and to adapt service proposals and promotional agreements to different public transportation funding sources. Contractor shall comply with audit, TxDOT, FTA, and National Transit Database reporting and compliance requirements.

7.6.8 Participate as necessary in meetings with agency and its client partners to ensure success of the program

7.6.9 Operate, as necessary, transportation service, including call center operations, scheduling, dispatching, driver operations and management, vehicle maintenance, safety, and licensing requirements, fare and data collection, as well as reporting

7.6.10 Contractor shall ensure that all operators are fully compliant with USDOT/FTA drug and alcohol testing policies as applicable and that background checks are performed with appropriate record keeping by the contractor or its subs

7.6.11 Accident Reporting: While a driver is in service of this contract, all traffic accidents, regardless of severity, shall be reported to the appropriate local law enforcement agency, as required by law. The Contractor will advise such agency of the accident and request a police unit and/or emergency services to respond. DCTA (or their designee), shall be notified in writing by the Contractor any accident or incident within 24 hours of such an event. In cases involving injury or property damage, the Contractor shall notify DCTA immediately upon receipt by Contractor of such knowledge.

7.7 Mobile Transportation Technology

7.7.1 Ability of a transportation service to be facilitated by the way of an online platform accessible via a website and mobile devices

7.7.2 Trips have the option of being scheduled through a mobile application available for free download through major outlets such as Apple store and Google play

7.7.3 Any additional technology innovations that could facilitate a more streamlined process for customers to book an on-demand trip by a supplementary transportation provider

END OF SCOPE OF WORK

PROPOSAL SUBMITTAL INFORMATION

The responses shall be submitted on standard 8-1/2" x 11" paper and should describe the firm, consultant(s), and key staff members who will be directly involved, a list of references, statement of qualifications; and other information relevant to the services offered and expertise provided by the respondent.

The respondent shall submit one (1) signed original and three (3) copies of the proposal in the described proposal format. The proposal shall not exceed 25 double sided pages.

The page count shall not include:

- Cover Letter (two page maximum)
- Front and back cover and section dividers (bindings and covers will be at the discretion of the Proposer).
- Company brochure (not more than one item), which shall be part of the Appendix.
- Required certificates and forms

Each technical proposal shall include the following information:

LETTER OF TRANSMITTAL

The letter of transmittal must contain the following statements and information:

- Company name, address, telephone number(s), and website
- Name, title, email address, and telephone number of the person(s) to contact and who are authorized to represent the firm and to whom correspondence should be directed
- A brief statement of your understanding of the services to be performed and a positive commitment to provide services as specified
- The letter must be signed by a corporate officer or person authorized to bind the proposer to the proposal and cost schedule
- A statement indicating that the proposal and cost schedule will be valid and binding for sixty (60) days following the proposal due date, and will become part of the contract

TAB 1: QUALIFICATIONS AND EXPERIENCE

- Briefly introduce firm, providing a summary of the administration, organizations and staffing of your firm, including multiple offices, if applicable. Provide an organizational chart indicating the positions and names for the core management team which will undertake this engagement.
- Identify the project manager and each individual who will work as part of this engagement. Include any professional designations and affiliations, certifications and licenses, etc. or other information that will illustrate the technical competence of the proposed personnel.
- Describe experience of the firm in the last 36 months in performing services in similar size and scope, highlighting work in the public sector.
- Provide information on the size of the firm's customer base, nationally and regionally, and the number of vehicles utilizing firm's technology.
- Demonstrate the firm's knowledge and understanding of the Service required by DCTA.
- Identify Small, Minority-owned, DBE, and Woman-owned business, if applicable, intended to be utilized on this project.

TAB 2: PROJECT APPROACH

This section should include a detailed summary of the approach to be undertaken for development of this effort and individuals responsible for the deliverables. It must be based on the project understanding and Scope of Services but provide additional detail on the process to be used in delivering these services. The responsibilities of any sub-contractors, if any, should be clearly noted.

Additionally, this section must be divided into three subsections:

A. Introduction to Firm

- Detail the firm's approach to meeting the scope of services defined herein
- Indicate in a narrative format the firms understanding of the scope of work, including a detailed project plan for this engagement outlining major tasks and responsibilities, time frames, and staff assignments.
- Provide a summary, including why the firm is pursuing the work and how the firm is qualified to perform the services.

B. Address all elements of Project Scope:

The proposal should specifically address the minimum required elements of the Project Scope referenced earlier in this solicitation, which include:

- Customized Transportation Service Offerings
- Fare Payment Structures
- Policy and Administrative Factors
- Mobile Transportation Technology

C. Additional Administrative Factor Information

- Support availability (days of week and time)
- Provide a brief description of rates and variances with triggering events or thresholds
- Provide a brief description of how driver supply will be ensured and adjusted based on use at qualifying locations
- Provide a brief description of customer support in the event of an issue with activation of the agency-provided subsidy or other disruption to typical practices
- Provide a brief description and example of an invoice
- Provide an example of a ridership report that the agency can use to measure service success
- Describe process and criteria for hiring drivers to ensure safe service delivery
- Provide any joint marketing and communications guidelines that must be followed
- Financial Statement: Provide evidence of adequate operating costs

TAB 3: REFERENCES

Provide name, title, address, and telephone number of three references for clients, whom similar services have been provided in the last 36 months, including information referencing the actual services performed and length of tenure. At least one of the references provided must be in the public sector.

TAB 4: PRICING

Section shall include fare estimates and the base on which the firm calculates fares for each product they are offering in this proposal. Additionally, this section should address the cost to DCTA for the firm in the development and implementation of potential service programs. The proposed pricing shall include all costs necessary to fully complete the project.

TAB 5: ATTACHMENTS

Include company brochure, copies of referenced certifications, and any other attachments as part of this submittal.

TAB 6: APPENDIX

The following documents/forms will be completed by the Offeror and must be submitted with the Technical Proposal:

- Attachment A Certification and Restrictions on Lobbying
- Attachment B Government Wide Debarment and Suspension
- Attachment C Conflict Of Interest Questionnaire
- Attachment D Bidder's Questionnaire
- Attachment E Affidavit of Non-Collusion

Each Proposer shall submit a detailed response to the RFP. The response shall include sufficient information to enable the Denton County Transportation Authority to evaluate the capabilities of the Proposer and its approach to providing the specified services. Best Value will be the base for the evaluation. Unnecessarily elaborate or voluminous responses are neither required nor wanted. The 25-page limit and other requirements described shall be enforced. Discussion of the firm's past experience, which is not related to the specified services, should not be included. The response shall specifically address the issues raised, and provide the information requested.

It is the responsibility of the proposer to examine the entire RFP package and seek clarification of any item or requirement that may not be clear and to check all responses for accuracy before submitting a proposal.

Proposers may not contact members of the Authority's Board of Directors concerning this procurement. Any proposer violating this provision may be disqualified from consideration in this procurement.

DCTA will not respond to oral requests. Any request for a change to any part of this document must be fully supported with technical data, or other pertinent information evidencing that the exception will result in a condition equal to or better than the required by the RFP, without substantial increase in cost or time requirements. Any responses to such written requests shall be provided by DCTA in the form of an addendum. Only written responses (including e-mail and/or e-mail attachments) provided as addenda shall be official and all other forms of communication with any officer, employee or agent of DCTA shall not be binding on DCTA.

EVALUATION AND SELECTION

1. GENERAL RESPONSIVENESS

In order for a Proposer to be eligible to be awarded the Contract, the Proposal must be responsive to the Request for Proposal, and DCTA must be able to determine that the Proposer is responsible to perform the Contract satisfactorily. Responsive Proposals are those complying in all material aspects of the solicitation. Proposals which do not comply with all the terms and conditions of this solicitation may be rejected as nonresponsive. A Proposer may, at any time after the submission of the Proposal, be requested to submit further written evidence verifying that the firm(s) meet the criteria necessary to be determined a responsible Proposer. Refusal to provide requested information may result in the Proposer being declared nonresponsive, and the Proposal may be rejected.

2. EVALUATION OF PROPOSAL

Proposals will be reviewed for compliance with the requirements of the solicitation. Those proposals which are deemed incomplete will be rejected. Proposals will also be scored on the clarity and completeness.

A committee of DCTA staff will evaluate the responses and will make a recommendation for award based on the best value to the agency. Evaluation will be based on the following criteria:

SCORING CRITERIA	WEIGHT
Experience and Qualifications: Experience of the firm in the last 36 months in performing services in similar size and scope. Demonstration of the firm's knowledge and understanding of the services required by DCTA. Size of customer base and install base.	**25**
Schedule: Provide detailed schedule for project development and implementation, and turnaround time for services requested. Proposer will be evaluated on the ability to implement program in an efficient time frame, and to be able to quickly adapt to program needs as they change.	**5**
Understanding Proposed Work Plan: Address the Proposers understanding of the purpose, goals and objectives of this solicitation. Demonstrate a customer interface and experience that will allow an ease of scheduling trips and applying discounts. Addresses the availability of drivers at times of high demand of service. Demonstrate an understanding of public transportation and the methods of integration of provided services in a transit agency's organizational and operational structure. Discuss technological testing and quality assurance procedures.	**25**
Fare Payment Structures: Addresses the proposers understanding of the different modes and methods of payment for customer fares, including agency provided discounts, fixed fares for passengers, and temporary discounts. Demonstrate ability to work with the unbanked. Address the interface experience with DCTA staff, including discount set-up, invoicing, and tracking capabilities	**20**

Policy and Administrative Factors: Address the ability of Proposer to provide ridership reports and detailed data. Demonstrate ability to work with customers without smartphones. Understanding of Federal regulations on public transportation funding and the ability to develop service proposals that fit within government transportation regulations. Address planned marketing and communications activities included in the partnership (no additional cost). Addresses financial and accounting background to ensure ability to perform tasks for length of contract.	**15**
Cost Address estimated costs to customer for transportation services, and agency costs for coordinating with contractor for planning and implementation. Price proposals will include all costs to implement service program, including training.	**10**
TOTAL	**100**

3. TECHNICAL EVALUATION

Following evaluation and scoring of the technical proposals submitted, DCTA will identify those firms technically qualified to perform the work. If DCTA determines that a Proposal is not technically sufficient or a Proposer is not technically qualified, that Proposal will not be evaluated further.

4. INTERVIEWS

The evaluation committee will determine whether acceptance of the most favorable initial proposal without discussion is appropriate, or whether interviews and/or discussions should be conducted. Interviews may be conducted by phone or webinar.

5. BEST AND FINAL OFFER

DCTA reserves the right to request a best and final offer from all or select proposers.

6. CONTRACT AWARD

Award will be made to the responsible firm(s) whose proposal is most advantageous to DCTA. Accordingly, DCTA may not necessarily make an award to the Proposer with the highest technical ranking nor award to the Proposer with the lowest Price Proposal if doing so would not be in the overall best interest of DCTA.

GENERAL TERMS AND CONDITIONS

1. CANCELLATION

The DCTA reserves the right to cancel this RFP or cancel the award of this contract at any time before execution of the contract by both parties if cancellation is deemed to be in DCTA's best interest. In no event shall the DCTA have any liability for the cancellation of award. The Proposer assumes the sole risk and responsibility for all expenses connected with the preparation of its proposal.

2. EVALUATION AND AWARD OF CONTRACT

The Owner reserves the right to reject any and all proposals, to waive any and all informalities except for the time of submission of the Proposal and to negotiate contract terms with the Successful Proposer. The Owner also reserves the right to reject all nonconforming, non-responsive, unbalanced or conditional Proposals. Also, the Owner reserves the right to reject the Proposal of any Proposer if the Owner believes that it would not be in the best interest of the Project to make an award to that Proposer, whether because the Proposal is not responsive or the Proposer is unqualified or has doubtful financial ability or fails to meet any other pertinent standard or criteria established by the Owner. Discrepancies in the multiplication of units of Work and unit prices will be resolved in favor of the unit prices. Discrepancies between the indicated sum of any column of figures and the correct sum thereof will be resolved in favor of the correct sum.

In evaluating Proposals, the owner will consider the qualifications of the Proposers, whether or not the Proposals comply with the prescribed requirements, unit prices, completion time, and other data, as may be requested in the Proposal form or prior to the Notice of Award.

Because offers can at times be ambiguous, DCTA reserves the right to request additional information before making an award. DCTA also reserves the right to seek clarification from any proposer or offeror about any statement in its proposal that DCTA finds ambiguous.

The Owner may consider the qualifications and experience of any Subcontractors, Suppliers, or other persons or organizations proposed for those portions of the Work as to which the identity of Subcontractors, Suppliers, and other persons and organizations must be submitted as requested by the Owner:

The Owner may consider its past experience with the Proposer and any Subcontractors, Suppliers or other persons or organizations proposed to perform any portions of the Work, and the Owner reserves the right to reject any and all proposals from persons or organizations with whom the Owner has previously experienced problems including but not limited to issues relating to performance, workmanship, and disputes or litigation.

The Owner may conduct such investigations as the owner deems necessary to assist in the evaluation of any Proposal and to establish the responsibility, qualifications and financial stability of Proposers, proposed Subcontractors, Suppliers and other persons and organizations to perform and furnish the Work in accordance with the Contract Documents to the Owner's satisfaction within the prescribed time.

If contract is to be awarded, it will be awarded to the best qualified Proposer whose evaluation by the Owner indicates to the Owner that the award will be in the best interests of the DCTA. DCTA may award the contract to a single supplier, affording DCTA the improved cost effectiveness as well as one stop shopping. If determined to be in the best interest of DCTA, it reserves the right to award to multiple proposers.

3. ADDENDUM

The contents of all addendums sent to proposer are to be incorporated in the RFP documents and will become part of the contract documents.

4. PROOF OF INSURABILITY

Proposer must submit proof of insurability with their proposal. Proof of insurability can be in the form of a letter from the Proposer's insurance provider stating the provider's commitment to insure the Proposer for the types of coverages and levels of coverages specified in this RFP.

5. CONFIDENTIALITY

It is in the public interest for the DCTA to receive as many proposals as possible. The DCTA acknowledges the possible confidential nature of any aspect of the proposal including the cost or price information requested by the Request for Proposals, and the DCTA obliges itself in good faith not to disclose any page of the proposal containing information which the Proposer clearly marks as confidential during the evaluation process. After contract award, disclosure of information shall be made only in accordance with Texas law and applicable Federal requirements.

6. TAXES

DCTA is tax exempt and shall furnish the successful proposer with the necessary tax exemption certificate.

7. INDEMNIFICATION

IN ADDITION TO ALL OTHER OBLIGATIONS OF INDEMNIFICATION SPECIFIED HEREIN, PROPOSER AGREES TO RELEASE AND BE LIABLE FOR AND TO DEFEND, INDEMNIFY AND SAVE HARMLESS DCTA, U.S. DEPARTMENT OF TRANSPORTATION, TEXAS DEPARTMENT OF TRANSPORTATION, DENTON COUNTY, AND THEIR RESPECTIVE BOARD MEMBERS, OFFICERS, EMPLOYEES, AND AGENTS, , EMPLOYEES, AND ALL GOVERNMENT FUNDING AGENCIES PROVIDING FUNDS OR SERVICES IN CONNECTION WITH THIS PROJECT (HEREINAFTER COLLECTIVELY REFERRED TO AS "INDEMNITEES" AND INDIVIDUALLY AS "INDEMNITEE"), FROM AND AGAINST ANY AND ALL LOSS, COST, DAMAGE, LIABILITY AND EXPENSE, INCLUDING CONSEQUENTIAL DAMAGES, COUNSEL FEES, WHETHER OR NOT ARISING OUT OF ANY CLAIM, SUIT OR ACTION AT LAW, IN EQUITY, OR OTHERWISE, OF ANY KIND OR NATURE WHATSOEVER, INCLUDING NEGLIGENCE, ARISING OUT OF THE PERFORMANCE OF THE WORK BY REASON OF ANY ACCIDENT, LOSS OR DAMAGE OF PROPERTY, INCLUDING THE WORK SITE, PROPERTY OF ONE OR MORE INDEMNITEESAND PROPOSER, OR INJURY, INCLUDING DEATH, TO ANY PERSON OR PERSONS, INCLUDING EMPLOYEES OF ONE OR MORE INDEMNITEES, PROPOSER, SUBCONTRACTORS AT ANY TIER OR ANY PERSON WORKING ON PROPOSER'S BEHALF, CAUSED BY PROPOSER, WHICH MAY BE SUSTAINED EITHER DURING THE TERM OF THE CONTRACT, OR UPON OR AFTER COMPLETION OF THE PROJECT, WHETHER BROUGHT DIRECTLY BY THESE PERSONS OR BY ANYONE CLAIMING UNDER OR THROUGH THEM INCLUDING HEIRS, DEPENDENTS AND ESTATES.

PROPOSER ALSO AGREES FOR ITSELF AND ON BEHALF OF ITS AGENTS, SERVANTS, SUBCONTRACTORS, MATERIAL MEN, AND EMPLOYEES TO DEFEND, INDEMNIFY AND HOLD HARMLESS INDEMNITEES FROM AND AGAINST ANY AND ALL CLAIMS OF ANY KIND OR NATURE WHATSOEVER REGARDING SUBCONTRACTORS AND MATERIAL MEN AND AGREES TO ASSUME THE DEFENSE OF INDEMNITEES TO ANY SUCH SUIT AT ITS COST AND EXPENSE. THE PROPOSER FURTHER ASSUMES THE RISK OF LOSS AND DAMAGE TO MATERIALS, MACHINERY AND EQUIPMENT TO BE INCORPORATED IN THE WORK AT ALL TIMES PRIOR TO DELIVERY TO THE PROJECT SITE OR WHILE IN THE POSSESSION OR UNDER THE CONTROL OF THE PROPOSER.

PROPOSER, FOR ITSELF AND ITS EMPLOYEES, BOARD MEMBERS, OFFICERS, AGENTS, SERVANTS, PROPOSERS, SUBCONTRACTORS, LICENSEES AND INVITEES, OR ANY OTHER PERSON WORKING ON PROPOSER'S BEHALF, HEREBY RELEASES AND AGREES TO BE LIABLE FOR AND TO DEFEND, INDEMNIFY AND SAVE HARMLESS INDEMNITEES, EXCEPT TO THE EXTENT THAT AN INDEMNITYIS NEGLIGENT IN WHOLE OR IN PART, FOR ANY CLAIMS MADE BY AN EMPLOYEE, BOARD MEMBER, OFFICER, AGENT, OF PROPOSER'S OR ANY OTHER PERSON WORKING ON PROPOSER'S BEHALF, INCLUDING

CLAIMS FOR COMPENSATION OR BENEFITS PAYABLE TO ANY EXTENT BY OR FOR PROPOSER UNDER ANY WORKERS' OR SIMILAR COMPENSATION ACTS OR OTHER EMPLOYEE BENEFIT ACTS. IN THE EVENT OF JOINT OR CONCURRENT NEGLIGENCE OF THE PROPOSER AND ONE OR MORE INDEMNITEES, RESPONSIBILITY, IF ANY, SHALL BE APPORTIONED COMPARATIVELY IN ACCORDANCE WITH THE LAWS OF THE STATE OF TEXAS. A PROPOSER'S OBLIGATIONS UNDER THIS SECTION O SHALL NOT BE LIMITED TO THE LIMITS OF COVERAGE OF INSURANCE MAINTAINED OR REQUIRED TO BE MAINTAINED BY PROPOSER UNDER ANY RESULTANT AGREEMENT. THIS PROVISION SHALL SURVIVE THE TERMINATION OF ANY RESULTANT AGREEMENT.

A PROPOSER'S INDEMNITY OBLIGATIONS UNDER THIS SECTION SHALL ALSO SPECIFICALLY INCLUDE, WITHOUT LIMITATIONS, ALL FINES, PENALTIES, DAMAGES, LIABILITY, COSTS, EXPENSES (INCLUDING, WITHOUT LIMITATIONS, REASONABLE ATTORNEY'S FEES), AND PUNITIVE DAMAGES (IF ANY) ARISING OUT OF, OR IN CONNECTION WITH ANY (I) VIOLATION OF OR FAILURE TO COMPLY WITH ANY LAW, STATUTE, ORDINANCE, RULE, REGULATION, CODE OR REQUIREMENT OF A PUBLIC AUTHORITY THAT BEARS UPON THE PERFORMANCE OF THE WORK BY THE PROPOSER, A SUBCONTRACTOR, OR ANY PERSON OR ENTITY FOR WHOM EITHER IS RESPONSIBLE; (II) MEANS, METHODS, PROCEDURES, TECHNIQUES, OR SEQUENCES OF EXECUTION OR PERFORMANCE OF THE WORK; AND (III) FAILURE TO SECURE AND PAY FOR PERMITS, FEES, APPROVALS, LICENSES AND INSPECTIONS AS REQUIRED UNDER THE CONTRACT DOCUMENTS, OR ANY VIOLATION OF ANY PERMIT OR OTHER APPROVAL OF A PUBLIC AUTHORITY APPLICABLE TO THE WORK, BY THE PROPOSER, A SUBCONTRACTOR, OR ANY PERSON OR ENTITY FOR WHOM EITHER IS RESPONSIBLE.

IN ADDITION, PROPOSER SHALL INDEMNIFY INDEMNITEESFOR ANY FINES AND LEGAL FEES INCURRED BECAUSE EMPLOYEES, AGENTS, OR WORKERS SUPPLIED BY PROPOSER ARE NOT AUTHORIZED TO WORK IN THE UNITED STATES.

By the execution and submission of this proposal, proposer acknowledges proposer has read and does comply with all terms and conditions, clauses and requirements contained herein.

8. PAYMENT

DCTA shall pay the PROPOSER, upon the submission of proper invoices. Unless otherwise specified in this contract, payment shall be made within thirty (30) days of receipt of a complete and correct invoice.

Proposer's invoices for the services rendered shall be submitted to the following address.

DCTA Accounts Payable
PO Box 96
Lewisville, TX 75067
Or email to accountspayable@dcta.net

9. ASSIGNMENT

The successful proposer shall not assign, sell, transfer or convey the agreement completely or in part, without the prior written consent of DCTA.

10. VENUE

The agreement will be governed and construed according to the laws of the State of Texas; and venue for any action concerning this contract shall be in Denton County, Texas. The parties agree to submit to the personal and subject matter jurisdiction of said court.

11. INDEPENDENT CONTRACTOR

It is understood and agreed by and between the parties, that successful proposer, in satisfying conditions in this contract, is acting independently, and that DCTA assumes no responsibility or liabilities to any third party in connection with these actions. All services to be performed by successful proposer pursuant to this contract shall be in the capacity of an independent proposer, and not as an agent or employee of DCTA. Successful proposer shall supervise the performance of its services and shall be entitled to control the manner and means by which its services are to be performed, subject to the terms of this contract.

12. TERMINATION / DISPUTE RESOLUTION

Termination of Force Majeure

To the extent either party of this agreement shall be wholly or partially prevented from the performance of the term specified, or of any obligation or duty placed on such party by reason of or through work strikes, stoppage of labor, riot, fire, flood, acts of war, insurrection, court judgment, act of God, or other specific cause reasonably beyond the parties control and not attributable to its malfeasance, neglect or nonfeasance. In such event, the time for performance of such obligation or duty shall be suspended until such disability to perform is removed.

13. PROTEST PROCEDURES

Protests relative to this procurement will be reviewed and adjudicated by DCTA in accordance with its Procurement Policy and Procedures Manual maintained in DCTA's offices in Lewisville, TX.

14. ADMINISTRATIVE REMEDIES

Denton County Transportation Authority reserves the right to accept or reject any and/or all proposals, to waive any formalities and/or irregularities and to award the Contract in the best interest of the DCTA.

By submission of a proposal in response to this solicitation, the Proposer agrees to exhaust its administrative remedies under DCTA's Procurement Regulations or Disputes Clause of any resulting contract prior to seeking judicial relief of any type in connection with any matter related to this solicitation, the award of any contract, and any dispute under any related contract. Protests relative to this procurement will be reviewed and adjudicated by DCTA in accordance with its Procurement Policy and Procedures Manual maintained in DCTA's offices in Lewisville, TX.

15. OPEN RECORDS

All responses submitted to DCTA become the property of DCTA and are subject to the Public Information Act (Texas Government Code Chapter 552). The interested firms/individuals should familiarize themselves with the provisions of that Act. In no event shall DCTA, or any of its agents, Representatives, consultants, directors, officers, or employees, be liable to a firm/individual for the disclosure of all or any portion of a response submitted pursuant to the RFB.

If a firm/individual has special concerns about information that it desires to make available to DCTA, but which it believes constitutes a trade secret, proprietary information or other information excepted from disclosure, such firm/individual should specifically and conspicuously designate each page of that information, which the Proposer believes, should not be disclosed outside DCTA. Disclosure of requested information will be subject to the Texas Public Information Act.

16. CONTRACT

The successful Proposer may be required to execute a contract prepared and approved by DCTA General Counsel.

17. RELATIONSHIP AND WORK IN GENERAL

Contractor, an independent contractor, covenants and agrees to perform for the stated compensation, all of the services described in Scope of Work, Terms and Conditions of this Contract. Contractor agrees to complete the work in a professional and workmanlike manner with a high degree of care to ensure the accuracy and timeliness thereof.

18. ASSIGNMENT OF PERSONNEL

Contractor agrees to assign qualified staff members including a Project Manager who shall be responsible for the task administration and work performance.

19. EMPLOYMENT OF PERSONNEL

Contractor agrees to employ, at its own expense, all personnel required in performing the services under this contract. Personnel employed by Contractor shall not be employees of, nor have any contractual relationship with DCTA. All personnel engaged in the work shall be fully qualified and shall be authorized or licensed to perform such work as required.

20. EMPLOYMENT OF VETERANS

Applicable to capital projects only-Contractor shall provide a hiring preference, to the extent practicable, to veterans (as defined in section 2108 of Title 5) who have the requisite skills and abilities to perform the construction work required under this contract. This shall not be understood, construed or enforced in any manner that would require an employer to give a preference to any veteran over any equally qualified applicant who is a member of any racial or ethnic minority, female, an individual with a disability, or a former employee.

21. USE OF SUBCONTRACTORS

The Contractor may utilize the services of specialty subcontractors on those parts of the work which, under normal contracting practices, are performed by specialty subcontractors.

No work or services under this Contract shall be subcontracted without the prior written approval of DCTA. DCTA reserves the right to reject any subcontractors proposed to be utilized on this project.

22. DBE SUBCONTRACTS

If DBE subcontractors are utilized to perform under this contract the contractor must make available to DCTA copies of all DBE subcontracts upon request. The subcontractor shall ensure that all subcontracts or agreements with the Prime to supply labor or materials require that the subcontract and all lower tier subcontracts be performed in accordance with 49 CFR Part 26.55.

23. INSPECTION OF WORK

DCTA shall have the right to review and inspect the progress of the work described herein at all times.

24. COPYRIGHT

No reports, maps, or other documents produced in whole or in part under this contract shall be the subject of an application for copyright by or on behalf of the Contractor. All reports, maps, and other documents produced under this contract shall become the property of DCTA. The Contractor shall, at its expense, defend all suits or proceedings instituted against DCTA and pay any award of damages assessed against DCTA in such suits or proceedings, insofar as the same are based on any claim that materials furnished or work performed under the contract constitutes an infringement of any patent, trade secret, copyright, or any other proprietary right.

25. PROPRIETARY RIGHTS

Contractor agrees not to release data or information about the results of the project to any person outside of DCTA without first obtaining written authorization to release such information from DCTA.

26. OWNERSHIP OF DOCUMENTS

The parties agree and understand that any and all documents produced under this Contract are the sole and exclusive property of DCTA and DCTA retains ownership of all such documentation including, but not limited to, studies, plans, specifications, intellectual property and all related documents. To the extent necessary, CONTRACTOR HEREBY ASSIGNS AND TRANSFERS ANY AND ALL COPYRIGHTS TO DCTA.

27. MAINTENANCE OF RECORDS

Proposer must maintain records to show actual time involved in performance of the Work.

28. CHANGES BY CONTRACTOR

If, during the performance of Work under the Contract, the Contractor finds it impracticable to comply strictly with the specifications, the Contractor will notify the DCTA Project Manager and Procurement Manager immediately in writing.

29. WRITTEN ACCEPTANCE BY DCTA

Any proposals by Contractor that vary or add to this Contract shall be construed as additional terms or modifications and shall not become part of the Contract unless accepted in writing, by DCTA.

30. CHANGE ORDERS / CONTRACT MODIFICATIONS

All requests for changes in the work must be submitted in writing to the DCTA Project Manager. Changes shall be made only with the prior approval DCTA and only by appropriate written Change Order or Contract Modification as appropriate. The Procurement Manager may, at any time, by a written Change Order or Contract Modification, and without notice to the Surety (if any), make changes within the general scope of this Contract. If the change affects the Contractor's costs, then the Procurement Manager shall also make an equitable adjustment in the Contractor's compensation.

31. WHOLE AGREEMENTS

The Contract constitutes the whole of the agreement between the parties hereto and neither thereof has been induced to make or enter into the Contract by reason of any promise, agreement, representation, statement, or warranty other than contained herein.

32. PARTIAL INVALIDITY

If any term, provision, covenant, or condition of this agreement is held by a court of competent jurisdiction to be invalid, void, or unenforceable, the remainder of the provisions shall remain in full force and effect and shall in no way be affected, impaired, or invalidated.

33. TITLES AND HEADINGS FOR CONVENIENCE ONLY

As used throughout this Contract, titles and headings of sections are for convenience only, and shall not be used to aid in interpretation of the provisions contained herein.

34. COMPENSATION

The proposer shall be compensated for work in performance of the contract and per the agreed upon fees. The proposer shall include as part of his invoice a list of all subcontractors and the amounts to be paid to each of the subcontractors from this invoice. DCTA will require specific payment reporting

criteria for all payments made to subcontractors and will provide additional information and forms upon selection as the awarded firm.

35. PROMPT PAYMENT

The prime contractor agrees to pay each subcontractor under this prime contract for satisfactory performance of its contract no later than 30 days from the receipt of each payment the prime contractor receives from the Denton County Transportation Authority. Any delay or postponement of payment from the above referenced time frame may occur only for good cause following written approval of the Denton County Transportation Authority. This clause applies to both DBE and non-DBE subcontracts and must be included in contracts between the Denton County Transportation Authority, the prime contractor, sub contracts and sub-recipients.

36. RETAINAGE

The prime contractor agrees to return retainage payments to each subcontractor within 30 days after the subcontractors work is satisfactorily completed. Any delay or postponement of payment from the above referenced time frame may occur only for good cause following written approval of the Denton County Transportation Authority. This clause applies to both DBE and non-DBE subcontracts.

37. MINORITY OWNED FINANCIAL INSTITUTIONS

In accordance with the requirements of 49 CFR Part 26, and grant agreements between DCTA and the Department of Transportation (DOT), to investigate the full extent of services offered by financial institutions owned and controlled by socially and economically disadvantaged individuals in the community, to make reasonable efforts to use these institutions, and to encourage prime contractors on DOT-assisted contract to make use of these institutions. Information regarding financial institutions may be obtained on-line from the Federal Reserve at http://www.federalreserve.gov/Releases/mob/current/default.htm

38. NON-DISCRIMINATION

The contractor, sub-recipient or subcontractor shall not discriminate on the basis of race, color, national origin, or sex in the performance of this contract. The contractor shall carry out applicable requirements of 49 CFR part 26 in the award and administration of DOT-assisted contracts. Failure by the contractor to carry out these requirements is a material breach of this contract, which may result in the termination of this contract or such other remedy as the recipient deems appropriate, which may include, but is not limited to:

(1) Withholding monthly progress payments;

(2) Assessing sanctions

(3) Liquidated damages; and/or

(4) Disqualifying the contractor from future solicitations as non-responsible

39. GRATUITIES

It shall be unethical for any person to offer, give, or agree to give any DCTA officer or former DCTA officer, or for any DCTA officer or former DCTA officer to solicit, demand, accept, or agree to accept from another person, a gratuity or an offer of employment in connection with any decision, approval, disapproval, recommendation, or preparation of any part of a program requirement or a purchase request, influencing the content of any specification or procurement standard, rendering of advice, investigation, auditing, or in any other advisory capacity in any proceeding or application, request for ruling, determination, claim or controversy, or other particular matter, pertaining to any program requirement or a contract or subcontract, or to any solicitation therefore.

40. FUNDING

Funds for payment have been provided through the DCTA budget approved by the Board of Directors for this fiscal year only. State of Texas statutes prohibit the obligation and expenditure of public funds beyond the fiscal year for which a budget has been approved. Therefore, anticipated orders or other obligations that may arise past the end of the current DCTA fiscal year shall be subject to budget approval.

41. FEDERAL FUNDS

DCTA is a recipient of federal funds from the Federal Transit Authority (FTA) and as a recipient of federal funds specific clauses and certifications must be included in any contract that involves the disbursement of federal funds. If federal dollars will be utilized under this contract, Proposers must adhere to the clauses and certifications if applicable. All required clauses and certifications will be included if applicable.

42. PROCUREMENT OF RECOVERED MATERIALS

If federal dollars are utilized for this project all contractors must comply with section 6002 of the Solid Waste Disposal Act, as amended by the Resource Conservation and Recovery Act.

43. SILENCE OF SPECIFICATIONS

The apparent silence of the specifications as to any detail or to the apparent omission from it of a detailed description concerning any point, shall be regarded as meaning that only the best commercial practices are to prevail. All interpretations of these specifications shall be made on the basis of this statement.

INSURANCE REQUIREMENTS

Proposers performing work on DCTA's behalf shall provide the DCTA a certificate of insurance or a copy of their insurance policy(s) evidencing the coverage and coverage provisions identified herein within ten (10) days of request from DCTA. Proposers shall provide DCTA evidence that all subcontractors performing work on the project have the same types and amounts of coverage as required herein or that the subcontractors are included under the proposer's policy. Work shall not commence until insurance has been approved by DCTA.

All insurance companies and coverage must be authorized by the Texas Department of Insurance to transact business in the State of Texas and must have a A.M. Best's rating A- or greater.

Listed below are the types and minimum amounts of insurances required and which must be maintained during the term of the contract. DCTA reserves the right to amend or require additional types and amounts of coverage or provisions depending on the nature of the work.

COMMERCIAL GENERAL LIABILITY:

- Bodily Injury/Property Damage per occurrence $1,000,000
- General Aggregate $2,000,000
- Products/Completed Aggregate $2,000,000
- Personal Advertising Injury per occurrence $1,000,000
- Fire Damage $100,000
- Medical Expense $5,000

BUSINESS AUTO LIABILITY FOR TAXI OR FOR-HIRE SERVICES

to include coverage for:

- Owned/Leased vehicles
- Non-owned vehicles
- Hired vehicles
- Combined Single Limit $500,000

  Coverage shall include passenger bodily injury.

WORKERS' COMPENSATION EMPLOYERS' LIABILITY

to include:
each accident
Disease Policy Limits
Disease each employee

Statutory Limits per occurrence

- Each accident $1,000,000
- Disease Policy Limits $1,000,000
- Disease each employee $1,000,000

Workers' Compensation and Employers' Liability Coverage: The insurer shall agree to waive all rights of subrogation against the DCTA, its officials, employees and volunteers for losses arising from the activities under this contract.

As applicable, the contractor will provide a copy of Certificate of Coverage (certificate) of insurance, a certificate of authority to self-insure issued by the Division of Worker's Compensation Commission (DWC), or a coverage agreement (DWC-Form 81, DWC-Form 82, DWC-Form 83 or DWC-Form 84), showing statutory workers' compensation insurance coverage for the person's or entity's employees providing services on the project, for the duration of the project.

By signing this contract or providing or causing to be provided a certificate of coverage, the contractor is representing to DCTA that all employees of the contractor who will provide services on the project will be covered by workers' compensation coverage for the duration of the project, that the coverage will be based on proper reporting of classification codes and payroll amounts, and that all coverage agreements , which meets the statutory requirements of Texas Labor Code, Section 401.011(44), will be filed with the appropriate insurance carrier or, in the case of a self-insured, with the commission's Division of Self-Insurance Regulation. Providing false or misleading information may subject the contractor to administrative penalties, criminal penalties, civil penalties, or other civil actions.

ADDITIONAL INSURED:

The Commercial General Liability and Commercial Automobile Liability policies shall be endorsed to name DCTA, its directors and employees as additional insured regarding Proposer's operations in performance of this Contract.

WAIVER OF SUBROGATION:

The Workers' Compensation and Employers' Liability shall be endorsed to provide a waiver of subrogation in favor of DCTA, its officers, directors and employees.

COVERAGE PRIMARY:

Such insurance as is provided therein shall be primary and non-contributing with any other valid and collectible insurance available to DCTA. The limits of liability required above may be provided by a single policy of insurance or by a combination of primary, excess or umbrella policies. But in no event shall the total limits of liability available for any one occurrence or accident be less than the amounts required below.

NO COMMENCEMENT WITHOUT COVERAGE:

The Proposer shall not commence work at the site under this Contract until he/she has obtained all required insurance and until such insurance has been approved by DCTA. Proposer shall not allow any subcontractor to commence work until all similar required insurance has been obtained and approved. Approval of the insurance by DCTA shall not relieve or decrease the liability of the Proposer hereunder.

CERTIFICATES:

Certificate of Insurance evidencing insurance coverage as required shall be furnished to the Purchasing Manager prior to commencement of work and within ten (10) calendar days after the date of Notice of Award. CERTIFICATES SHALL BE PROVIDED BY PROPOSER AND ANYONE INVOLVED IN THE PERFORMANCE OF WORK UNDER THIS CONTRACT (not otherwise included under Proposer's coverage), INCLUDING ALL SUBCONTRACTORS. All certificates from Proposer and any subcontractors must be issued reflecting DCTA as the certificate holder. All Certificates of Insurance shall reflect the Denton County Transportation Authority project number. Failure to furnish the required certificates of

insurance within the time allowed shall not be considered cause for modification of any contractual time limits. All policies of insurance presented, as proof of compliance with the above requirements shall be on forms and with insurance companies approved by DCTA. All such insurance policies shall be provided by insurance companies having a Best's rating of A-VI rating or greater as shown in the most current issue of A.M. Best's Key Rating Guide. Policies of insurance issued by insurance companies not rated by Best's or have a Best's rating lower than A-VI will not be accepted as complying with the insurance requirements of the Contract unless such insurance companies are approved in writing prior to the award of the Contract. Certificate of Insurance shall contain transcripts from the proper office of the insurer, evidencing in particular those insured, the extent of the insurance, the location, and the cancellation clause as required below.

NO LAPSE OR CANCELLATION:

The Proposer and any subcontractor shall not cause any insurance to be canceled nor permit any insurance to lapse. All insurance policies shall include a clause to the effect that the policy shall not be canceled, reduced, restricted, or limited until thirty (30) days after DCTA has received written notice. In the event of cancellation or lapse of insurance, the Proposer shall notify DCTA immediately and unless otherwise directed by DCTA, shall cease work until evidence of acceptable insurance coverage is supplied to DCTA.

BREACH:

Failure to maintain insurance coverage as required herein shall constitute a material breach and default.

Federal Clauses

Fly America Requirements

Applicability – all contracts involving transportation of persons or property, by air between the U.S. and/or places outside the U.S. These requirements do not apply to micro-purchases ($3,500 or less, except for construction contracts over $2,000).

Contractor shall comply with 49 USC 40118 (the "Fly America" Act) in accordance with General Services Administration regulations 41 CFR 301-10, stating that recipients and subrecipients of Federal funds and their contractors are required to use US Flag air carriers for US Government-financed international air travel and transportation of their personal effects or property, to the extent such service is available, unless travel by foreign air carrier is a matter of necessity, as defined by the Fly America Act. Contractor shall submit, if a foreign air carrier was used, an appropriate certification or memorandum adequately explaining why service by a US flag air carrier was not available or why it was necessary to use a foreign air carrier and shall, in any event, provide a certificate of compliance with the Fly America requirements. Contractor shall include the requirements of this section in all subcontracts that may involve international air transportation.

Charter Bus Requirements

These requirements do not apply to micro-purchases ($3,500 or less, except for construction contracts over $2,000).

Contractor shall comply with 49 USC 5323(d) and (g) and 49 CFR 604, which state that recipients and subrecipients of FTA assistance may provide charter service for transportation projects that uses equipment or facilities acquired with Federal assistance authorized under the Federal transit laws (except as permitted by 49 CFR 604.2), or under 23 U.S.C. 133 or 142, only in compliance with those laws and FTA regulations, "Charter Service," 49 CFR part 604, the terms and conditions of which are incorporated herein by reference.

School Bus Requirements

School Bus Requirements – Applicability – Operational Service Contracts. These requirements do not apply to micro-purchases ($3,500 or less, except for construction contracts over $2,000). Pursuant to 69 USC 5323(f) or (g) as amended by MAP-21, 23 USC 133, 23 USC 142, and 49 CFR 605, recipients and subrecipients of FTA assistance shall not engage in school bus operations exclusively for transportation of students and school personnel in competition with private school bus operators unless qualified under specified exemptions. When operating exclusive school bus service under an allowable exemption, recipients and subrecipients shall not use federally funded equipment, vehicles, or facilities. Violations. If a Recipient or any Third Party Participant that has operated school bus service in violation of FTA's School Bus laws and regulations, FTA may: (1) Require the Recipient or Third Party Participant to take such remedial measures as FTA considers appropriate, or (2) Bar the Recipient or Third Party Participant from receiving Federal transit funds.

Energy Conservation

All Contracts except micro-purchases ($3,500 or less, except for construction contracts over $2,000)

Contractor shall comply with mandatory standards and policies relating to energy efficiency, stated in the state energy conservation plan issued in compliance with the Energy Policy & Conservation Act.

Clean Water

Applicability – All Contracts and Subcontracts over $150,000. Contractor shall comply with all applicable standards, orders or regulations issued pursuant to the Federal Water Pollution Control Act, as amended, 33 USC 1251 et seq. Contractor shall report each violation to the recipient and understands and agrees that the recipient shall, in turn, report each violation as required to FTA and the appropriate EPA Regional Office. Contractor shall include these requirements in each subcontract exceeding $100,000 financed in whole or in part with FTA assistance.

Lobbying

Construction/Architectural and Engineering/Acquisition of Rolling Stock/Professional Service Contract/Operational Service Contract/Turnkey contracts over $150,000

Byrd Anti-Lobbying Amendment, 31 U.S.C. 1352, as amended by the Lobbying Disclosure Act of 1995, P.L. 104-65 [to be codified at 2 U.S.C. § 1601, et seq.] - Contractors who apply or bid for an award of $150,000 or more shall file the certification required by 49 CFR part 20, "New Restrictions on Lobbying." Each tier certifies to the tier above that it will not and has not used Federal appropriated funds to pay any person or organization for influencing or attempting to influence an officer or employee of any agency, a member of Congress, officer or employee of Congress, or an employee of a member of Congress in connection with obtaining any Federal contract, grant or any other award covered by 31 U.S.C. 1352. Each tier shall also disclose the name of any registrant under the Lobbying Disclosure Act of 1995 who has made lobbying contacts on its behalf with non-Federal funds with respect to that Federal contract, grant or award covered by 31 U.S.C. 1352. Such disclosures are forwarded from tier to tier up to the recipient.

Access to Records and Reports

Applicability – As shown below. These requirements do not apply to micro-purchases ($3,500 or less, except for construction contracts over $2,000)

The following access to records requirements apply to this Contract:

1. Where the purchaser is not a State but a local government and is an FTA recipient or a subgrantee of FTA recipient in accordance with 49 CFR 18.36(i), contractor shall provide the purchaser, the FTA, the US Comptroller General or their authorized representatives access to any books, documents, papers and contractor records which are pertinent to this contract for the purposes of making audits, examinations, excerpts and transcriptions. Contractor shall also, pursuant to 49 CFR 633.17, provide authorized FTA representatives, including any PMO contractor, access to contractor's records and construction sites pertaining to a capital project, defined at 49 USC 5302(a)1, which is receiving FTA assistance through the programs described at 49 USC 5307, 5309 or 5311.

2. Where the purchaser is a State and is an FTA recipient or a subgrantee of FTA recipient in accordance with 49 CFR 633.17, contractor shall provide the purchaser, authorized FTA representatives, including any PMO Contractor, access to contractor's records and construction sites pertaining to a capital project, defined at 49 USC 5302(a)1, which receives FTA assistance through the programs described at 49 USC 5307, 5309 or 5311. By definition, a capital project excludes contracts of less than the simplified acquisition threshold currently set at $150,000.

3. Where the purchaser enters into a negotiated contract for other than a small purchase or under the simplified acquisition threshold and is an institution of higher education, a hospital or other non-profit organization and is an FTA recipient or a subgrantee of FTA recipient in accordance with 49 CFR 19.48, contractor shall provide the purchaser, the FTA, the US Comptroller General or their authorized representatives, access to any books, documents, papers and record of the contractor which are directly pertinent to this contract for the purposes of making audits, examinations, excerpts and transcriptions.

4. Where a purchaser which is an FTA recipient or a subgrantee of FTA recipient in accordance with 49 USC 5325(a) enters into a contract for a capital project or improvement (defined at 49 USC 5302(a)1) through other than competitive bidding, contractor shall make available records related to the contract to the purchaser, the Secretary of USDOT and the US Comptroller General or any authorized officer or employee of any of them for the purposes of conducting an audit and inspection.

5. Contractor shall permit any of the foregoing parties to reproduce by any means whatsoever or to copy excerpts and transcriptions as reasonably needed.

6. Contractor shall maintain all books, records, accounts and reports required under this contract for a period of not less than three (3) years after the date of termination or expiration of this contract, except in the event of litigation or settlement of claims arising from the performance of this contract, in which case contractor agrees to maintain same until the recipient, FTA Administrator, US Comptroller General, or any of their authorized representatives, have disposed of all such litigation, appeals, claims or exceptions related thereto. Re: 49 CFR

FTA does not require the inclusion of these requirements in subcontracts.

Federal Changes

All Contracts except micro-purchases ($3,500 or less, except for construction contracts over $2,000)
Contractor shall comply with all applicable FTA regulations, policies, procedures and directives, including without limitation those listed directly or by reference in the Master Agreement between the purchaser and FTA, as they may be amended or promulgated from time to time during the term of the contract. Contractor's failure to comply shall constitute a material breach of the contract.

Clean Air

Applicability – All contracts over $150,000.
1) Contractor shall comply with all applicable standards, orders or regulations pursuant to the Clean Air Act, 42 USC 7401 et seq. Contractor shall report each violation to the recipient and understands and agrees that the recipient will, in turn, report each violation as required to FTA and the appropriate EPA Regional Office.
2) Contractor shall include these requirements in each subcontract exceeding $150,000 financed in whole or in part with FTA assistance.

Recycled Products

All contracts for items designated by the EPA, when the purchaser or contractor procures $10,000 or more of one of these items during the current or previous fiscal year using Federal funds. The contractor agrees to comply with all the requirements of Section 6002 of the Resource Conservation and Recovery Act (RCRA), as amended (42 U.S.C. 6962), including but not limited to the regulatory provisions of 40 CFR Part 247, and Executive Order 12873, as they apply to the procurement of the items designated in Subpart B of 40 CFR Part 247.

Contract Work Hours & Safety Standards Act

Applicability – Contracts over $150,000

(1) Overtime requirements - No contractor or subcontractor contracting for any part of the contract work which may require or involve the employment of laborers or mechanics shall require or permit any such laborer or mechanic in any workweek in which he or she is employed on such work to work in excess of 40 hours in such workweek unless such laborer or mechanic receives compensation at a rate not less than one and one-half times the basic rate of pay for all hours worked in excess of 40 hours in such workweek.

(2) Violation; liability for unpaid wages; liquidated damages - In the event of any violation of the clause set forth in para. (1) of this section, contractor and any subcontractor responsible therefore shall be liable for the unpaid wages. In addition, such contractor and subcontractor shall be liable for liquidated damages. Such liquidated damages shall be computed with respect to each individual laborer or mechanic, including watchmen and guards, employed in violation of the clause set forth in para. (1) of this section, in the sum of $10 for each calendar day on which such individual was required or permitted to work in excess of the standard workweek of 40 hours without payment of the overtime wages required by the clause set forth in para. (1) of this section.

(3) Withholding for unpaid wages and liquidated damages - the recipient shall upon its own action or upon written request of USDOL withhold or cause to be withheld, from any moneys payable on account of work performed by contractor or subcontractor under any such contract or any other Federal contract with the same prime contractor, or any other federally-assisted contract subject to the Contract Work Hours & Safety Standards Act, which is held by the same prime contractor, such sums as may be determined to be necessary to satisfy any liabilities of such contractor or subcontractor for unpaid wages and liquidated damages as provided in the clause set forth in para. (2) of this section.

(4) Subcontracts - Contractor or subcontractor shall insert in any subcontracts the clauses set forth in this section and also a clause requiring the subcontractors to include these clauses in any lower tier subcontracts. Prime contractor shall be responsible for compliance by any subcontractor or lower tier subcontractor with the clauses set forth in this section.

No Government Obligation to Third Parties

Applicability – All contracts except micro-purchases ($3,500 or less, except for construction contracts over $2,000)

(1) The recipient and contractor acknowledge and agree that, notwithstanding any concurrence by the US Government in or approval of the solicitation or award of the underlying contract, absent the express written consent by the US Government, the US Government is not a party to this contract and shall not be subject to any obligations or liabilities to the recipient, the contractor, or any other party (whether or not a party to that contract) pertaining to any matter resulting from the underlying contract.

(2) Contractor agrees to include the above clause in each subcontract financed in whole or in part with FTA assistance. It is further agreed that the clause shall not be modified, except to identify the subcontractor who will be subject to its provisions.

Program Fraud and False or Fraudulent Statements or Related Acts

Applicability – All contracts except micro-purchases ($3,500 or less, except for construction contracts over $2,000)
(1) Contractor acknowledges that the provisions of the Program Fraud Civil Remedies Act of 1986, as amended, 31 USC 3801 et seq. and USDOT regulations, "Program Fraud Civil Remedies," 49 CFR 31, apply to its actions pertaining to this project. Upon execution of the underlying contract, contractor certifies or affirms the truthfulness and accuracy of any statement it has made, it makes, it may make, or causes to be made, pertaining to the underlying contract or FTA assisted project for which this contract work is being performed. In addition to other penalties that may be applicable, contractor further acknowledges that if it makes, or causes to be made, a false, fictitious, or fraudulent claim, statement, submittal, or certification, the US Government reserves the right to impose the penalties of the Program Fraud Civil Remedies Act (1986) on contractor to the extent the US Government deems appropriate.
(2) If contractor makes, or causes to be made, a false, fictitious, or fraudulent claim, statement, submittal, or certification to the US Government under a contract connected with a project that is financed in whole or in part with FTA assistance under the authority of 49 USC 5307, the Government reserves the right to impose the penalties of 18 USC 1001 and 49 USC 5307(n)(1) on contractor, to the extent the US Government deems appropriate.
(3) Contractor shall include the above two clauses in each subcontract financed in whole or in part with FTA assistance. The clauses shall not be modified, except to identify the subcontractor who will be subject to the provisions.

Termination

Applicability – All Contracts over $10,000, except contracts with nonprofit organizations and institutions of higher learning, where the threshold is $150,000

a. Termination for Convenience (General Provision) the recipient may terminate this contract, in whole or in part, at any time by written notice to contractor when it is in the recipient's best interest. Contractor shall be paid its costs, including contract close-out costs, and profit on work performed up to the time of termination. Contractor shall promptly submit its termination claim to the recipient. If contractor is in possession of any of the recipient's property, contractor shall account for same, and dispose of it as the recipient directs.

b. Termination for Default [Breach or Cause] (General Provision) If contractor does not deliver items in accordance with the contract delivery schedule, or, if the contract is for services, and contractor fails to perform in the manner called for in the contract, or if contractor fails to comply with any other provisions of the contract, the

recipient may terminate this contract for default. Termination shall be effected by serving a notice of termination to contractor setting forth the manner in which contractor is in default. Contractor shall only be paid the contract price for supplies delivered and accepted, or for services performed in accordance with the manner of performance set forth in the contract.
If it is later determined by the recipient that contractor had an excusable reason for not performing, such as a strike, fire, or flood, events which are not the fault of or are beyond the control of contractor, the recipient, after setting up a new delivery or performance schedule, may allow contractor to continue work, or treat the termination as a termination for convenience.

c. Opportunity to Cure (General Provision) the recipient in its sole discretion may, in the case of a termination for breach or default, allow contractor an appropriately short period of time in which to cure the defect. In such case, the notice of termination shall state the time period in which cure is permitted and other appropriate conditions
If contractor fails to remedy to the recipient's satisfaction the breach or default or any of the terms, covenants, or conditions of this Contract within ten (10) days after receipt by contractor or written notice from the recipient setting forth the nature of said breach or default, the recipient shall have the right to terminate the Contract without any further obligation to contractor. Any such termination for default shall not in any way operate to preclude the recipient from also pursuing all available remedies against contractor and its sureties for said breach or default.

d. Waiver of Remedies for any Breach In the event that the recipient elects to waive its remedies for any breach by contractor of any covenant, term or condition of this Contract, such waiver by the recipient shall not limit its remedies for any succeeding breach of that or of any other term, covenant, or condition of this Contract.

e. Termination for Convenience (Professional or Transit Service Contracts) the recipient, by written notice, may terminate this contract, in whole or in part, when it is in the recipient's interest. If the contract is terminated, the recipient shall be liable only for payment under the payment provisions of this contract for services rendered before the effective date of termination.

f. Termination for Default (Supplies and Service) If contractor fails to deliver supplies or to perform the services within the time specified in this contract or any extension or if the contractor fails to comply with any other provisions of this contract, the recipient may terminate this contract for default. The recipient shall terminate by delivering to contractor a notice of termination specifying the nature of default. Contractor shall only be paid the contract price for supplies delivered and accepted, or services performed in accordance with the manner or performance set forth in this contract.
If, after termination for failure to fulfill contract obligations, it is determined that contractor was not in default, the rights and obligations of the parties shall be the same as if termination had been issued for the recipient’s convenience.

g. Termination for Default (Transportation Services) If contractor fails to pick up the commodities or to perform the services, including delivery services, within the time specified in this contract or any extension or if contractor fails to comply with any other provisions of this contract, the recipient may terminate this contract for default. The recipient shall terminate by delivering to contractor a notice of termination specifying the nature of default. Contractor shall only be paid the contract price for services performed in accordance with the manner of performance set forth in this contract.
If this contract is terminated while contractor has possession of the recipient goods, contractor shall, as directed by the recipient, protect and preserve the goods until surrendered to the recipient or its agent. Contractor and the recipient shall agree on payment for the preservation and protection of goods. Failure to agree on an amount shall be resolved under the Dispute clause. If, after termination for failure to fulfill contract obligations, it is determined that contractor was not in default, the rights and obligations of the parties shall be the same as if termination had been issued for the recipient’s convenience.

h. Termination for Default (Construction) If contractor refuses or fails to prosecute the work or any separable part, with the diligence that will insure its completion within the time specified, or any extension, or fails to complete the

work within this time, or if contractor fails to comply with any other provisions of this contract, the recipient may terminate this contract for default. the recipient shall terminate by delivering to contractor a notice of termination specifying the nature of default. In this event, the recipient may take over the work and compete it by contract or otherwise, and may take possession of and use any materials, appliances, and plant on the work site necessary for completing the work. Contractor and its sureties shall be liable for any damage to the recipient resulting from contractor's refusal or failure to complete the work within specified time, whether or not contractor's right to proceed with the work is terminated. This liability includes any increased costs incurred by the recipient in completing the work.

Contractor's right to proceed shall not be terminated nor shall contractor be charged with damages under this clause if:

1. Delay in completing the work arises from unforeseeable causes beyond the control and without the fault or negligence of contractor. Examples of such causes include: acts of God, acts of the recipient, acts of another contractor in the performance of a contract with the recipient, epidemics, quarantine restrictions, strikes, freight embargoes; and

2. Contractor, within 10 days from the beginning of any delay, notifies the recipient in writing of the causes of delay. If in the recipient’s judgment, delay is excusable, the time for completing the work shall be extended. The recipient’s judgment shall be final and conclusive on the parties, but subject to appeal under the Disputes clauses.

If, after termination of contractor's right to proceed, it is determined that contractor was not in default, or that the delay was excusable, the rights and obligations of the parties will be the same as if termination had been issued for the recipient’s convenience.

i. Termination for Convenience or Default (Architect & Engineering) the recipient may terminate this contract in whole or in part, for the recipient's convenience or because of contractor’s failure to fulfill contract obligations. The recipient shall terminate by delivering to contractor a notice of termination specifying the nature, extent, and effective date of termination. Upon receipt of the notice, contractor shall (1) immediately discontinue all services affected (unless the notice directs otherwise), and (2) deliver to the recipient all data, drawings, specifications, reports, estimates, summaries, and other information and materials accumulated in performing this contract, whether completed or in process. If termination is for the recipient’s convenience, it shall make an equitable adjustment in the contract price but shall allow no anticipated profit on unperformed services. If termination is for contractor’s failure to fulfill contract obligations, the recipient may complete the work by contact or otherwise and contractor shall be liable for any additional cost incurred by the recipient.
If, after termination for failure to fulfill contract obligations, it is determined that contractor was not in default, the rights and obligations of the parties shall be the same as if termination had been issued for the recipient’s convenience.

j. Termination for Convenience or Default (Cost-Type Contracts) the recipient may terminate this contract, or any portion of it, by serving a notice or termination on contractor. The notice shall state whether termination is for convenience of the recipient or for default of contractor. If termination is for default, the notice shall state the manner in which contractor has failed to perform the requirements of the contract. Contractor shall account for any property in its possession paid for from funds received from the recipient, or property supplied to contractor by the recipient. If termination is for default, the recipient may fix the fee, if the contract provides for a fee, to be paid to contractor in proportion to the value, if any, of work performed up to the time of termination. Contractor shall promptly submit its termination claim to the recipient and the parties shall negotiate the termination settlement to be paid to contractor. If termination is for the recipient’s convenience, contractor shall be paid its contract close-out costs, and a fee, if the contract provided for payment of a fee, in proportion to the work performed up to the time of termination.
If, after serving a notice of termination for default, the recipient determines that contractor has an excusable reason for not performing, such as strike, fire, flood, events which are not the fault of and are beyond the control

of contractor, the recipient, after setting up a new work schedule, may allow contractor to continue work, or treat the termination as a termination for convenience.

Government Wide Debarment and Suspension (Non Procurement)

The Recipient agrees to the following: (1) It will comply with the requirements of 2 C.F.R. part 180, subpart C, as adopted and supplemented by U.S. DOT regulations at 2 C.F.R. part 1200, which include the following: (a) It will not enter into any arrangement to participate in the development or implementation of the Project with any Third Party Participant that is debarred or suspended except as authorized by: 1 U.S. DOT regulations, "Nonprocurement Suspension and Debarment," 2 C.F.R. part 1200, 2 U.S. OMB, "Guidelines to Agencies on Governmentwide Debarment and Suspension (Nonprocurement)," 2 C.F.R. part 180, including any amendments thereto, and 3 Executive Orders Nos. 12549 and 12689, "Debarment and Suspension," 31 U.S.C. § 6101 note, (b) It will review the U.S. GSA "System for Award Management," http://https.www.sam.gov,.proxy1.semalt.design if required by U.S. DOT regulations, 2 C.F.R. part 1200, and (c) It will include, and require each of its Third Party Participants to include, a similar provision in each lower tier covered transaction, ensuring that each lower tier Third Party Participant: 1 Will comply with Federal debarment and suspension requirements, and 2 Reviews the "System for Award Management" at http://https.www.sam.gov,.proxy1.semalt.design if necessary to comply with U.S. DOT regulations, 2 C.F.R. part 1200, and (2) If the Recipient suspends, debars, or takes any similar action against a Third Party Participant or individual, the Recipient will provide immediate written notice to the: (a) FTA Regional Counsel for the Region in which the Recipient is located or implements the Project, (b) FTA Project Manager if the Project is administered by an FTA Headquarters Office, or (c) FTA Chief Counsel,

Contracts Involving Federal Privacy Act Requirements

When a grantee maintains files on drug and alcohol enforcement activities for FTA, and those files are organized so that information could be retrieved by personal identifier, the Privacy Act requirements apply to all contracts except micro-purchases ($3,500 or less, except for construction contracts over $2,000)

The following requirements apply to the Contractor and its employees that administer any system of records on behalf of the Federal Government under any contract:

(1) The Contractor agrees to comply with, and assures the compliance of its employees with, the information restrictions and other applicable requirements of the Privacy Act of 1974, 5 U.S.C. § 552a. Among other things, the Contractor agrees to obtain the express consent of the Federal Government before the Contractor or its employees operate a system of records on behalf of the Federal Government. The Contractor understands that the requirements of the Privacy Act, including the civil and criminal penalties for violation of that Act, apply to those individuals involved, and that failure to comply with the terms of the Privacy Act may result in termination of the underlying contract.

(2) The Contractor also agrees to include these requirements in each subcontract to administer any system of records on behalf of the Federal Government financed in whole or in part with Federal assistance provided by FTA.

Civil Rights Requirements

Applicability – All contracts except micro-purchases ($3,500 or less, except for construction contracts over $2,000)

The following requirements apply to the underlying contract:

The Recipient understands and agrees that it must comply with applicable Federal civil rights laws and regulations, and follow applicable Federal guidance, except as the Federal Government determines otherwise in writing. Therefore, unless a Recipient or Program, including an Indian Tribe or the Tribal Transit Program, is specifically exempted from a civil rights statute, FTA requires compliance with that civil rights statute, including compliance with equity in service:

a. Nondiscrimination in Federal Public Transportation Programs. The Recipient agrees to, and assures that each Third Party Participant will, comply with Federal transit law, 49 U.S.C. § 5332 (FTA's "Nondiscrimination" statute): (1) FTA's "Nondiscrimination" statute prohibits discrimination on the basis of: (a) Race, (b) Color, (c) Religion, (d) National origin, (e) Sex, (f) Disability, (g) Age, or (h) Gender identity and (2) The FTA "Nondiscrimination" statute's prohibition against discrimination includes: (a) Exclusion from participation, (b) Denial of program benefits, or (c) Discrimination, including discrimination in employment or business opportunity, (3) Except as FTA determines otherwise in writing: (a) General. Follow: 1 The most recent edition of FTA Circular 4702.1, "Title VI Requirements and Guidelines for Federal Transit Administration Recipients," to the extent consistent with applicable Federal laws, regulations, and guidance, and
2 Other applicable Federal guidance that may be issued, but (b) Exception for the Tribal Transit Program. FTA does not require an Indian Tribe to comply with FTA program-specific guidelines for Title VI when administering its projects funded under the Tribal Transit Program,

b. Nondiscrimination – Title VI of the Civil Rights Act. The Recipient agrees to, and assures that each Third Party Participant will: (1) Prohibit discrimination based on: (a) Race, (b) Color, or (c) National origin, (2) Comply with: (a) Title VI of the Civil Rights Act of 1964, as amended, 42 U.S.C. § 2000d et seq., (b) U.S. DOT regulations, "Nondiscrimination in Federally-Assisted Programs of the Department of Transportation – Effectuation of Title VI of the Civil Rights Act of 1964," 49 C.F.R. part 21, and (c) Federal transit law, specifically 49 U.S.C. § 5332, as stated in the preceding section a, and (3) Except as FTA determines otherwise in writing, follow: (a) The most recent edition of FTA Circular 4702.1, "Title VI and Title VI-Dependent Guidelines for Federal Transit Administration Recipients," to the extent consistent with applicable Federal laws, regulations, and guidance. (b) U.S. DOJ, "Guidelines for the enforcement of Title VI, Civil Rights Act of 1964," 28 C.F.R. § 50.3, and (c) Other applicable Federal guidance that may be issued,

c. Equal Employment Opportunity. (1) Federal Requirements and Guidance. The Recipient agrees to, and assures that each Third Party Participant will, prohibit discrimination on the basis of race, color, religion, sex, or national origin, and: (a) Comply with Title VII of the Civil Rights Act of 1964, as amended, 42 U.S.C. § 2000e et seq., (b) Facilitate compliance with Executive Order No. 11246, "Equal Employment Opportunity," as amended by Executive Order No. 11375, "Amending Executive Order No. 11246, Relating to Equal Employment Opportunity," 42 U.S.C. § 2000e note, (c) Comply with Federal transit law, specifically 49 U.S.C. § 5332, as stated in section a, and (d) Comply with other applicable EEO laws and regulations, as provided in Federal guidance, including laws and regulations prohibiting discrimination on the basis of disability, except as the Federal Government determines otherwise in writing, (2) General. The Recipient agrees to: (a) Ensure that applicants for employment are employed and employees are treated during employment without discrimination on the basis of their: 1 Race, 2 Color, 3 Religion, 4 Sex, 5 Disability, 6 Age, or 7 National origin, (b) Take affirmative action that includes, but is not limited to: 1 Recruitment advertising, 2 Recruitment, 3 Employment, 4 Rates of pay, 5 Other forms of compensation, 6 Selection for training, including apprenticeship, 7 Upgrading, 8 Transfers, 9 Demotions, 10 Layoffs, and 11 Terminations, but (b) Indian Tribe. Title VII of the Civil Rights Act of 1964, as amended, exempts Indian Tribes under the definition of "Employer".

(3) Equal Employment Opportunity Requirements for Construction Activities. In addition to the foregoing, when undertaking "construction" as recognized by the U.S. Department of Labor (U.S. DOL), the Recipient agrees to comply, and assures the compliance of each Third Party Participant, with: (a) U.S. DOL regulations, "Office of Federal Contract Compliance Programs, Equal Employment Opportunity, Department of Labor," 41 C.F.R. chapter 60, and (b) Executive Order No. 11246, "Equal Employment Opportunity," as amended by Executive Order No. 11375, "Amending Executive Order No. 11246, Relating to Equal Employment Opportunity," 42 U.S.C. § 2000e note,

d. Disadvantaged Business Enterprise. To the extent authorized by applicable Federal law, the Recipient agrees to facilitate, and assures that each Third Party Participant will facilitate, participation by small business concerns owned and controlled by socially and economically disadvantaged individuals, also referred to as "Disadvantaged

Business Enterprises" (DBEs), in the Project as follows: 1) Requirements. The Recipient agrees to comply with: (a) Section 1101(b) of MAP-21, 23 U.S.C. § 101 note, (b) U.S. DOT regulations, "Participation by Disadvantaged Business Enterprises in Department of Transportation Financial Assistance Programs," 49 C.F.R. part 26, and (c) Federal transit law, specifically 49 U.S.C. § 5332, as stated in section a, (2) Assurance. As required by 49 C.F.R. § 26.13(a), (b) DBE Program Requirements. Recipients receiving planning, capital and/or operating assistance that will award prime third party contracts exceeding $250,000 in a Federal fiscal year must: 1 Have a DBE program meeting the requirements of 49 C.F.R. part 26, 2 Implement a DBE program approved by FTA, and 3 Establish an annual DBE participation goal, (c) Special Requirements for a Transit Vehicle Manufacturer. The Recipient understands and agrees that each transit vehicle manufacturer, as a condition of being authorized to bid or propose on FTA-assisted transit vehicle procurements, must certify that it has complied with the requirements of 49 C.F.R. part 26, (d) the Recipient provides assurance that: The Recipient shall not discriminate on the basis of race, color, national origin, or sex in the award and performance of any DOT-assisted contract or in the administration of its DBE program or the requirements of 49 C.F.R. part 26. The Recipient shall take all necessary and reasonable steps under 49 C.F.R. part 26 to ensure nondiscrimination in the award and administration of DOT-assisted contracts. The Recipient's DBE program, as required by 49 C.F.R. part 26 and as approved by DOT, is incorporated by reference in this agreement. Implementation of this program is a legal obligation and failure to carry out its terms shall be treated as a violation of this agreement. Upon notification to the Recipient of its failure to carry out its approved program, the Department may impose sanctions as provided for under 49 C.F.R. part 26 and may, in appropriate cases, refer the matter for enforcement under 18 U.S.C. § 1001 and/or the Program Fraud Civil Remedies Act of 1986, 31 U.S.C. § 3801 et seq.,

(2) Exception for the Tribal Transit Program. FTA exempts Indian tribes from the Disadvantaged Business Enterprise regulations at 49 C.F.R. part 26 under MAP-21 and previous legislation,

e. Nondiscrimination on the Basis of Sex. The Recipient agrees to comply with Federal prohibitions against discrimination on the basis of sex, including: (1) Title IX of the Education Amendments of 1972, as amended, 20 U.S.C. § 1681 et seq., (2) U.S. DOT regulations, "Nondiscrimination on the Basis of Sex in Education Programs or Activities Receiving Federal Financial Assistance," 49 C.F.R. part 25, and (3) Federal transit law, specifically 49 U.S.C. § 5332, as stated in section a,

f. Nondiscrimination on the Basis of Age. The Recipient agrees to comply with Federal prohibitions against discrimination on the basis of age, including: (1) The Age Discrimination in Employment Act (ADEA), 29 U.S.C. §§ 621 – 634, which prohibits discrimination on the basis of age, (2) U.S. Equal Employment Opportunity Commission (U.S. EEOC) regulations, "Age Discrimination in Employment Act," 29 C.F.R. part 1625, which implements the ADEA, (3) The Age Discrimination Act of 1975, as amended, 42 U.S.C. § 6101 et seq., which prohibits discrimination against individuals on the basis of age in the administration of programs or activities receiving Federal funds, (4) U.S. Health and Human Services regulations, "Nondiscrimination on the Basis of Age in Programs or Activities Receiving Federal Financial Assistance," 45 C.F.R. part 90, which implements the Age Discrimination Act of 1975, and (5) Federal transit law, specifically 49 U.S.C. § 5332, as stated in section a,

g. Nondiscrimination on the Basis of Disability. The Recipient agrees to comply with the following Federal prohibitions pertaining to discrimination against seniors or individuals with disabilities: (1) Federal laws, including: (a) Section 504 of the Rehabilitation Act of 1973, as amended, 29 U.S.C. § 794, which prohibits discrimination on the basis of disability in the administration of federally funded programs or activities, (b) The Americans with Disabilities Act of 1990 (ADA), as amended, 42 U.S.C. § 12101 et seq., which requires that accessible facilities and services be made available to individuals with disabilities, 1 General. Titles I, II, and III of the ADA apply to FTA Recipients, but 2 Indian Tribes. While Titles II and III of the ADA apply to Indian Tribes, Title I of the ADA exempts Indian Tribes from the definition of "employer," (c) The Architectural Barriers Act of 1968, as amended, 42 U.S.C. § 4151 et seq., which requires that buildings and public accommodations be accessible to individuals with disabilities, (d) Federal transit law, specifically 49 U.S.C. § 5332, which now includes disability as a prohibited basis for discrimination, and (e) Other applicable laws and amendments pertaining to access for elderly individuals or individuals with disabilities, (2) Federal regulations, including: (a) U.S. DOT regulations,

"Transportation Services for Individuals with Disabilities (ADA)," 49 C.F.R. part 37, (b) U.S. DOT regulations, "Nondiscrimination on the Basis of Disability in Programs and Activities Receiving or Benefiting from Federal Financial Assistance," 49 C.F.R. part 27, (c) U.S. DOT regulations, "Transportation for Individuals with Disabilities: Passenger Vessels," 49 C.F.R. part 39, (d) Joint U.S. Architectural and Transportation Barriers Compliance Board (U.S. ATBCB) and U.S. DOT regulations, "Americans With Disabilities (ADA) Accessibility Specifications for Transportation Vehicles," 36 C.F.R. part 1192 and 49 C.F.R. part 38, (e) U.S. DOJ regulations, "Nondiscrimination on the Basis of Disability in State and Local Government Services," 28 C.F.R. part 35, (f) U.S. DOJ regulations, "Nondiscrimination on the Basis of Disability by Public Accommodations and in Commercial Facilities," 28 C.F.R. part 36, (g) U.S. EEOC, "Regulations to Implement the Equal Employment Provisions of the Americans with Disabilities Act," 29 C.F.R. part 1630, (h) U.S. Federal Communications Commission regulations, "Telecommunications Relay Services and Related Customer Premises Equipment for Persons with Disabilities," 47 C.F.R. part 64, Subpart F, (i) U.S. ATBCB regulations, "Electronic and Information Technology Accessibility Standards," 36 C.F.R. part 1194, and (j) FTA regulations, "Transportation for Elderly and Handicapped Persons," 49 C.F.R. part 609, and (3) Other applicable Federal civil rights and nondiscrimination guidance,

h. Drug or Alcohol Abuse - Confidentiality and Other Civil Rights Protections. The Recipient agrees to comply with the confidentiality and civil rights protections of: (1) The Drug Abuse Office and Treatment Act of 1972, as amended, 21 U.S.C. § 1101 et seq., (2) The Comprehensive Alcohol Abuse and Alcoholism Prevention, Treatment and Rehabilitation Act of 1970, as amended, 42 U.S.C. § 4541 et seq., and (3) The Public Health Service Act, as amended, 42 U.S.C. §§ 290dd – 290dd-2,

i. Access to Services for People with Limited English Proficiency. Except as the Federal Government determines otherwise in writing, the Recipient agrees to promote accessibility of public transportation services to people whose understanding of English is limited by following: 1) Executive Order No. 13166, "Improving Access to Services for Persons with Limited English Proficiency," August 11, 2000, 42 U.S.C. § 2000d-1 note, and (2) U.S. DOT Notice, "DOT Policy Guidance Concerning Recipients' Responsibilities to Limited English Proficiency (LEP) Persons," 70 Fed. Reg. 74087, December 14, 2005,

j. Other Nondiscrimination Laws. Except as the Federal Government determines otherwise in writing, the Recipient agrees to: (1) Comply with other applicable Federal nondiscrimination laws and regulations, and (2) Follow Federal guidance prohibiting discrimination.

k. Remedies. Remedies for failure to comply with applicable Federal Civil Rights laws and Federal regulations may be enforced as provided in those Federal laws or Federal regulations.

Breaches and Dispute Resolution

All contracts over $150,000

Disputes arising in the performance of this contract which are not resolved by agreement of the parties shall be decided in writing by the recipient's authorized representative. This decision shall be final and conclusive unless within ten (10) days from the date of receipt of its copy, contractor mails or otherwise furnishes a written appeal to the recipient's CEO. In connection with such appeal, contractor shall be afforded an opportunity to be heard and to offer evidence in support of its position. The decision of the recipient's CEO shall be binding upon contractor and contractor shall abide by the decision. FTA has a vested interest in the settlement of any violation of Federal law including the the False Claims Act, 31 U.S.C. § 3729.

Performance During Dispute - Unless otherwise directed by the recipient, contractor shall continue performance under this contract while matters in dispute are being resolved.

Claims for Damages - Should either party to the contract suffer injury or damage to person or property because of any act or omission of the party or of any of his employees, agents or others for whose acts he is legally liable, a claim for damages therefore shall be made in writing to such other party within ten days after the first observance of such injury or damage.

Remedies - Unless this contract provides otherwise, all claims, counterclaims, disputes and other matters in question between the recipient and contractor arising out of or relating to this agreement or its breach will be decided by arbitration if the parties mutually agree, or in a court of competent jurisdiction within the residing State.

Rights and Remedies - Duties and obligations imposed by the contract documents and the rights and remedies available thereunder shall be in addition to and not a limitation of any duties, obligations, rights and remedies otherwise imposed or available by law. No action or failure to act by the recipient or contractor shall constitute a waiver of any right or duty afforded any of them under the contract, nor shall any such action or failure to act constitute an approval of or acquiescence in any breach thereunder, except as may be specifically agreed in writing.

Transit Employee Protective Provisions

Contracts for transit operations except micro-purchases ($3,500 or less, except for construction contracts over $2,000)

Public Transportation Employee Protective Arrangements. The Recipient agrees that 49 U.S.C. § 5333(b) requires employee protective arrangements to be in place as a condition of award of FTA assistance made available or appropriated for FTA programs involving public transportation operations. U.S. DOL recognizes the following categories of arrangements:
(1) U.S. DOL Certification. When its Project involves public transportation operations and is financed with funding made available or appropriated for 49 U.S.C. §§ 5307, 5309, 5312, 5337, or 5339, as amended by Map-21, or former 49 U.S.C. §§ 5308, 5309, 5312, or other provisions of law as required by the Federal Government, U.S. DOL must provide a Certification of employee protective arrangements before FTA may provide financial assistance for the Project. Therefore, the Recipient understands and agrees, and assures that any Third Party Participant providing public transportation operations will agree, that: (a) It must carry out the Project as provided in its U.S. DOL Certification, which contains the terms and conditions that U.S. DOL has determined to be fair and equitable to protect the interests of any employees affected by the Project, (b) It must comply with 49 U.S.C. § 5333(b), and any future amendments thereto, (c)
It will follow the U.S. DOL guidelines, “Guidelines, Section 5333(b), Federal Transit Law,” 29 C.F.R. part 215, except as U.S. DOL determines otherwise in writing, (d) It must comply with the terms and conditions of the U.S. DOL certification of public transportation employee protective arrangements for the Project, which certification is dated as identified on the Underlying Agreement, including: 1 Alternative comparable arrangements U.S. DOL has specified for the Project, 2 Any revisions U.S. DOL has specified for the Project, or 3 Both, and
(e) It must comply with the following documents and provisions incorporated by reference in and made part of the Underlying Agreement for the Project: 1 The U.S. DOL certification of public transportation employee protective arrangements for the Project, which certification is dated as identified on the Underlying Agreement, 2 The documents cited in that U.S. DOL certification for the Project, 3 Any alternative comparable arrangements that U.S. DOL has specified for the Project, and 4 Any revisions that U.S. DOL has specified for the Project, (2) Special Warranty. When its Project involves public transportation operations, and is financed with funding made available or appropriated for 49 U.S.C. § 5311, as amended by Map-21, for former 49 U.S.C. § 5311 in effect in FY 2012, or a previous fiscal year, or for section 3038 of TEA-21, as amended by section 3039 of SAFETEA-LU, U.S. DOL will provide a Special Warranty for those projects, including projects under the Tribal Transit Program. Therefore, the Recipient understands and agrees, and assures that any Third Party Participant providing public transportation operations will agree, that: (a) It must comply with Federal transit laws, specifically 49 U.S.C. § 5333(b),
(b) Follow the U.S. DOL guidelines, “Guidelines, Section 5333(b), Federal Transit Law,” 29 C.F.R. part 215, except as U.S. DOL determines otherwise in writing, (c) It will comply with the U.S. DOL Special Warranty for its Project that is most current on the date when it executed the Underlying Agreement, and documents cited therein, including: 1 Any alternative comparable arrangements U.S. DOL has specified for the Project, 2 Any revisions U.S. DOL has specified for the Project, or 3 Both, and (d) It will comply with the following documents and provisions incorporated by reference in and made part of the Underlying Agreement: 1 The U.S. DOL Special

Warranty for its Project, 2 Documents cited in that Special Warranty, 3 Alternative comparable arrangements U.S. DOL specifies for the Project, and 4 Any revisions that U.S. DOL has specified for the Project, and (3) Special Arrangements for 49 U.S.C. § 5310 Projects. The Recipient understands and agrees, and assures that any Third Party Participant providing public transportation operations will agree, that although pursuant to 49 U.S.C. § 5310, and former 49 U.S.C. §§ 5310 or 5317, FTA has determined that it was not "necessary or appropriate" to apply the conditions of 49 U.S.C. § 5333(b) to Subrecipients participating in the program to provide public transportation for seniors (elderly individuals) and individuals with disabilities, FTA reserves the right to make the following exceptions: (a) FTA will make case-by-case determinations of the applicability of 49 U.S.C. § 5333(b) for all transfers of funding authorized under title 23, United States Code (flex funds), and (b) FTA reserves the right to make other exceptions as it deems appropriate.

Disadvantaged Business Enterprise

Contracts over $3,500 awarded on the basis of a bid or proposal offering to use DBEs

a. This contract is subject to the requirements of Title 49, Code of Federal Regulations, Part 26, Participation by Disadvantaged Business Enterprises in Department of Transportation Financial Assistance Programs. The national goal for participation of Disadvantaged Business Enterprises (DBE) is 10%. The recipient's overall goal for DBE participation is listed elsewhere. If a separate contract goal for DBE participation has been established for this procurement, it is listed elsewhere.

b. The contractor shall not discriminate on the basis of race, color, religion, national origin or sex in the performance of this contract. The contractor shall carry out applicable requirements of 49 CFR Part 26 in the award and administration of this contract. Failure by the contractor to carry out these requirements is a material breach of this contract, which may result in the termination of this contract or such other remedy as the municipal corporation deems appropriate. Each subcontract the contractor signs with a subcontractor must include the assurance in this paragraph (see 49 CFR 26.13(b)).

c. If a separate contract goal has been established, Bidders/offerors are required to document sufficient DBE participation to meet these goals or, alternatively, document adequate good faith efforts to do so, as provided for in 49 CFR 26.53.

d. If no separate contract goal has been established, the successful bidder/offeror will be required to report its DBE participation obtained through race-neutral means throughout the period of performance.

e. The contractor is required to pay its subcontractors performing work related to this contract for satisfactory performance of that work no later than 30 days after the contractor's receipt of payment for that work from the recipient. In addition, the contractor may not hold retainage from its subcontractors or must return any retainage payments to those subcontractors within 30 days after the subcontractor's work related to this contract is satisfactorily completed or must return any retainage payments to those subcontractors within 30 days after incremental acceptance of the subcontractor's work by the recipient and contractor's receipt of the partial retainage payment related to the subcontractor's work.

f. The contractor must promptly notify the recipient whenever a DBE subcontractor performing work related to this contract is terminated or fails to complete its work, and must make good faith efforts to engage another DBE subcontractor to perform at least the same amount of work. The contractor may not terminate any DBE subcontractor and perform that work through its own forces or those of an affiliate without prior written consent of the recipient.

Prompt payment

Applicability – All contracts except micro-purchases ($3,500 or less, except for construction contracts over $2,000)

The prime contractor agrees to pay each subcontractor under this prime contract for satisfactory performance of its contract no later than 30 days from the receipt of each payment the prime contract receives from the Recipient. The prime contractor agrees further to return retainage payments to each subcontractor within 30 days after the subcontractors work is satisfactorily completed. Any delay or postponement of payment from the above referenced time frame may occur only for good cause following written approval of the Recipient. This clause applies to both DBE and non-DBE subcontracts.

Incorporation of Federal Transit Administration (FTA) Terms

All contracts except micro-purchases ($3,500 or less, except for construction contracts over $2,000)

The preceding provisions include, in part, certain Standard Terms & Conditions required by USDOT, whether or not expressly stated in the preceding contract provisions. All USDOT-required contractual provisions, as stated in FTA Circular 4220.1F, are hereby incorporated by reference. Anything to the contrary herein notwithstanding, all FTA mandated terms shall be deemed to control in the event of a conflict with other provisions contained in this Agreement. The contractor shall not perform any act, fail to perform any act, or refuse to comply with any request that would cause the recipient to be in violation of FTA terms and conditions.

Drug and Alcohol Abuse and Testing

Operational service contracts except micro-purchases ($3,500 or less, except for construction contracts over $2,000)

The Contractor agrees to comply with the following Federal substance abuse regulations: a. Drug-Free Workplace. U.S. DOT regulations, "Drug-Free Workplace Requirements (Grants), " 49 C.F.R. Part 32, that implements the Drug-Free Workplace Act of 1988 as amended, 41 U.S.C. §§ 8103 et seq., and 2 CFR part 182, b. Alcohol Misuse and Prohibited Drug Use. FTA Regulations, "Prevention of Alcohol Misuse and Prohibited Drug Use in Transit Operations," 49 USC 5331, as amended by Map-21, 49 CFR part 40, 49 USC chapter 53, 49 CFR Part 655, to the extent applicable.

Other Federal Requirements

The following requirements are not federal clauses.

Full and Open Competition

In accordance with 49 U.S.C. § 5325(a) all procurement transactions shall be conducted in a manner that provides full and open competition.

Prohibition Against Exclusionary or Discriminatory Specifications

Apart from inconsistent requirements imposed by Federal statute or regulations, the contractor shall comply with the requirements of 49 USC 5323(h)(2) by refraining from using any FTA assistance to support procurements using exclusionary or discriminatory specifications.

Conformance with ITS National Architecture

Contractor shall conform, to the extent applicable, to the National Intelligent Transportation Standards architecture as required by SAFETEA-LU Section 5307(c), 23 U.S.C. Section 512 and as amended by MAP-21 23 U.S.C. § 517(d), note and follow the provisions of FTA Notice, “FTA National Architecture Policy on Transit Projects,” 66 Fed. Reg.1455 etseq., January 8, 2001, and any other implementing directives FTA may issue at a later date, except to the extent FTA determines otherwise in writing.

Access Requirements for Persons with Disabilities

Contractor shall comply with 49 USC 5301(d), stating Federal policy that the elderly and persons with disabilities have the same rights as other persons to use mass transportation services and facilities and that special efforts shall be made in planning and designing those services and facilities to implement that policy. Contractor shall

also comply with all applicable requirements of Sec. 504 of the Rehabilitation Act (1973), as amended, 29 USC 794, which prohibits discrimination on the basis of handicaps, and the Americans with Disabilities Act of 1990 (ADA), as amended, 42 USC 12101 et seq., which requires that accessible facilities and services be made available to persons with disabilities, including any subsequent amendments thereto.

Notification of Federal Participation

To the extent required by law, in the announcement of any third party contract award for goods and services (including construction services) having an aggregate value of $500,000 or more, contractor shall specify the amount of Federal assistance to be used in financing that acquisition of goods and services and to express that amount of Federal assistance as a percentage of the total cost of the third party contract.

Interest of Members or Delegates to Congress

No members of, or delegates to, the US Congress shall be admitted to any share or part of this contract nor to any benefit arising therefrom.

Ineligible Contractors and Subcontractors

Any name appearing upon the Comptroller General's list of ineligible contractors for federally-assisted contracts shall be ineligible to act as a subcontractor for contractor pursuant to this contract. If contractor is on the Comptroller General's list of ineligible contractors for federally financed or assisted construction, the recipient shall cancel, terminate or suspend this contract.

Other Contract Requirements

To the extent not inconsistent with the foregoing Federal requirements, this contract shall also include those provisions attached hereto, and shall comply with the recipient's Procurement Guidelines, available upon request from the recipient.

Compliance with Federal Regulations

Any contract entered pursuant to this solicitation shall contain the following provisions: All USDOT-required contractual provisions, as set forth in FTA Circular 4220.1F, are incorporated by reference. Anything to the contrary herein notwithstanding, FTA mandated terms shall control in the event of a conflict with other provisions contained in this Agreement. Contractor shall not perform any act, fail to perform any act, or refuse to comply with any grantee request that would cause the recipient to be in violation of FTA terms and conditions. Contractor shall comply with all applicable FTA regulations, policies, procedures and directives, including, without limitation, those listed directly or incorporated by reference in the Master Agreement between the recipient and FTA, as may be amended or promulgated from time to time during the term of this contract. Contractor's failure to so comply shall constitute a material breach of this contract.

Real Property

Any contract entered into shall contain the following provisions: Contractor shall at all times comply with all applicable statutes and USDOT regulations, policies, procedures and directives governing the acquisition, use and disposal of real property, including, but not limited to, 49 CFR 18.31-18.34, 49 CFR 19.30-19.37, 49 CFR Part 24, 49 CFR 5326 as amended by FAST Act, 49 CFR part 18 or 19, 49 USC 5334, applicable FTA Circular 5010, and FTA Master Agreement, as they may be amended or promulgated during the term of this contract. Contractor's failure to so comply shall constitute a material breach of this contract.

Access to Services for Persons with Limited English Proficiency

To the extent applicable and except to the extent that FTA determines otherwise in writing, the Recipient agrees to comply with the policies of Executive Order No. 13166, "Improving Access to Services for Persons with Limited English Proficiency," 42 U.S.C. § 2000d 1 note, and with the provisions of U.S. DOT Notice, "DOT Guidance to Recipients on Special Language Services to Limited English Proficient (LEP) Beneficiaries," 70 Fed. Reg. 74087, December 14, 2005.

Environmental Justice

Except as the Federal Government determines otherwise in writing, the Recipient agrees to promote environmental justice by following: (1)
Executive Order No. 12898, “Federal Actions to Address Environmental Justice in Minority Populations and Low-Income Populations,” February 11, 1994, 42 U.S.C. § 4321 note, as well as facilitating compliance with that Executive Order, and (2) DOT Order 5610.2, “Department of Transportation Actions To Address Environmental Justice in Minority Populations and Low-Income Populations,” 62 Fed. Reg. 18377, April 15, 1997, and (3) The most recent and applicable edition of FTA Circular 4703.1, “Environmental Justice Policy Guidance for Federal Transit Administration Recipients,” August 15, 2012, to the extent consistent with applicable Federal laws, regulations, and guidance,

Environmental Protections

Compliance is required with any applicable Federal laws imposing environmental and resource conservation requirements for the project. Some, but not all, of the major Federal laws that may affect the project include: the National Environmental Policy Act of 1969; the Clean Air Act; the Resource Conservation and Recovery Act; the comprehensive Environmental response, Compensation and Liability Act; as well as environmental provisions with Title 23 U.S.C., and 49 U.C. chapter 53. The U.S. EPA, FHWA and other federal agencies may issue other federal regulations and directives that may affect the project. Compliance is required with any applicable Federal laws and regulations in effect now or that become effective in the future.

Geographic Information and Related Spatial Data

Any project activities involving spatial data or geographic information systems activities financed with Federal assistance are required to be consistent with the National Spatial Data Infrastructure promulgated by the Federal Geographic Data Committee, except to the extent that FTA determines otherwise in writing.

Geographic Preference

All project activities must be advertised without geographic preference, (except in A/E under certain circumstances, preference for hiring veterans on transit construction projects and geographic-based hiring preferences as proposes to be amended in 2 CFR Part 1201).

Organizational Conflicts of Interest

The Recipient agrees that it will not enter into a procurement that involves a real or apparent organizational conflict of interest described as follows: (1) When It Occurs. An organizational conflict of interest occurs when the Project work, without appropriate restrictions on certain future activities, results in an unfair competitive advantage: (a) To that Third Party Participant or another Third Party Participant performing the Project work, and (b) That impairs that Third Party Participant’s objectivity in performing the Project work, or (2) Other. An organizational conflict of interest may involve other situations resulting in fundamentally unfair competitive conditions, (3) Disclosure Requirements. Consistent with FTA policies, the Recipient must disclose to FTA, and each of its Subrecipients must disclose to the Recipient: (a) Any instances of organizational conflict of interest, or (b) Violations of federal criminal law, involving fraud, bribery, or gratuity violations potentially affecting the federal award, and (4) Failure to Disclose. Failure to make required disclosures can result in remedies for noncompliance, including debarment or suspension.

Federal Single Audit Requirements for State Administered Federally Aid Funded Projects Only

Non Federal entities that expend $750,000 or more in a year in Federal awards from all sources are required to comply with the Federal Single Audit Act provisions contained in U.S. Office of Management and Budget (OMB) Circular No. A 133, “Audits of States, Local Governments, and Non Profit Organizations” (replaced with 2 CFR Part 200,“Uniform Administrative Requirements, Cost Principles, and Audit Requirements for Federal Awards” effective December 26, 2014 as applicable). Non Federal entities that expend Federal awards from a single source may provide a program specific audit, as defined in the Circular. Non Federal entities that expend less

than the amount above in a year in Federal awards from all sources are exempt from Federal audit requirements for that year, except as noted in Sec. 215 (a) of OMB Circular A-133 Subpart B--Audits, records must be available for review or audit by appropriate officials of the cognizant Federal agency the New York State Department of Transportation, the New York State Comptrollers Office and the U.S. Governmental Accountability Office (GAO). Non Federal entities are required to submit a copy of all audits, as described above, within 30 days of issuance of audit report, but no later than 9 months after the end of the entity's fiscal year, to the New York State Department of Transportation, Contract Audit Bureau, 50 Wolf Road, Albany, NY 12232. Unless a time extension has been granted by the cognizant Federal Agency and has been filed with the New York State Department of Transportation's Contract Audit Bureau, failure to comply with the requirements of OMB Circular A-133 may result in suspension or termination of Federal award payments.

Veterans Preference

Veterans Preference. As provided by 49 U.S.C. § 5325(k), to the extent practicable, the Recipient agrees and assures that each of its Subrecipients:
(1) Will give a hiring preference to veterans, as defined in 5 U.S.C. § 2108, who have the skills and abilities required to perform construction work required under a third party contract in connection with a Capital Project supported with federal assistance appropriated or made available for 49 U.S.C. chapter 53, and
(2) Will not require an employer to give a preference to any veteran over any equally qualified applicant who is a member of any racial or ethnic minority, female, an individual with a disability, or a former employee.

Safe Operation of Motor Vehicles

The Contractor is encouraged to adopt and promote on-the-job seat belt use policies and programs for its employees and other personnel that operate company-owned vehicles, company rented vehicles, or personally operated vehicles. The terms "company-owned" and "company-leased" refer to vehicles owned or leased either by the Contractor or AGENCY.

The Contractor agrees to adopt and enforce workplace safety policies to decrease crashes caused by distracted drivers, including policies to ban text messaging while using an electronic device supplied by an employer, and driving a vehicle the driver owns or rents, a vehicle Contactor owns, leases, or rents, or a privately-owned vehicle when on official business in connection with the work performed under this agreement.

Catalog of Federal Domestic Assistance (CFDA) Identification Number

The municipal project sponsor is required to identify in its accounts all Federal awards received and expended, and the Federal programs under which they were received. Federal program and award identification shall include, as applicable, the CFDA title and number, award number and year, name of the Federal agency, and name of the pass through entity.

CFDA number for the Federal Transportation Administration

Nonurbanized Area Formula (Section 5311) is 20.509. A Recipient covered by the Single Audit Act Amendments of 1996 and OMB Circular A-133, "Audits of States, Local Governments, and Non-Profit Organizations," (replaced with 2 CFR Part 200,"Uniform Administrative Requirements, Cost Principles, and Audit Requirements for Federal Awards" effective December 26, 2014 as applicable) agrees to separately identify the expenditures for Federal awards under the Recovery Act on the Schedule of Expenditures of Federal Awards (SEFA) and the Data Collection Form (SF-SAC) required by OMB Circular A-133. The Recipient agrees to accomplish this by identifying expenditures for Federal awards made under Recovery Act separately on the SEFA, and as separate rows under Item 9 of Part III on the SF-SAC by CFDA number, and inclusion of the prefix "ARRA" in identifying the name of the Federal program on the SEFA and as the first characters in Item 9d of Part III on the SF-SAC.

Attachment A

Certification and Restrictions on Lobbying

CERTIFICATION AND RESTRICTIONS ON LOBBYING

Denton County
Transportation Authority

I, _____, hereby certify
(Name and title of official)

On behalf of _____ that:
(Name of Bidder/Company Name)

- No federal appropriated funds have been paid or will be paid, by or on behalf of the undersigned, to any person for influencing or attempting to influence an officer or employee of any agency, a Member of Congress, and officer or employee of Congress, or an employee of a Member of Congress in connection with the awarding of any federal contract, the making of any federal grant, the making of any federal loan, the entering into of any cooperative agreement, and the extension, continuation, renewal, amendment, or modification of any federal contract, grant, loan, or cooperative agreement.

- If any funds other than federal appropriated funds have been paid or will be paid to any person influencing or attempting to influence an officer or employee of any agency, a Member of Congress, and officer or employee of Congress, or an employee of a Member of Congress in connection with the federal contract, grant, loan, or cooperative agreement, the undersigned shall complete and submit Standard Form – LLL, "Disclosure Form to Report Lobbying," in accordance with its instructions.

- The undersigned shall require that the language of this certification be included in the award documents for all sub-awards at all tiers (including sub-contracts, sub-grants and contracts under grants, loans, and cooperative agreements) and that all sub-recipients shall certify and disclose accordingly.

This certification is a material representation of fact upon which reliance was placed when this transaction was made or entered into. Submission of this certification is a prerequisite for making or entering into this transaction imposed by 31 U.S.C. § 1352 (as amended by the Lobbying Disclosure Act of 1995). Any person who fails to file the required certification shall be subject to a civil penalty of not less than $10,000 and not more than $100,000 for each such failure.

The undersigned certifies or affirms the truthfulness and accuracy of the contents of the statements submitted on or with this certification and understands that the provisions of 31 U.S.C. Section 3801, et seq., are applicable thereto.

Name of Bidder/Company Name _____

Type or print name_____

Signature of authorized representative _____ Date __/__/__

Signature of notary and SEAL _____

Attachment B

Government Wide Debarment

and Suspension

GOVERNMENT-WIDE DEBARMENT AND SUSPENSION (NONPROCUREMENT)

Denton County Transportation Authority

Instructions for Certification: By signing and submitting this bid or proposal, the prospective lower tier participant is providing the signed certification set out below.

(1) It will comply and facilitate compliance with U.S. DOT regulations, "Nonprocurement Suspension and Debarment," 2 CFR part 1200, which adopts and supplements the U.S. Office of Management and Budget (U.S. OMB) "Guidelines to Agencies on Governmentwide Debarment and Suspension (Nonprocurement)," 2 CFR part 180,

(2) To the best of its knowledge and belief, that its Principals and Subrecipients at the first tier:

a. Are eligible to participate in covered transactions of any Federal department or agency and are not presently:

(1) Debarred,
(2) Suspended,
(3) Proposed for debarment,
(4) Declared ineligible,
(5) Voluntarily excluded, or
(6) Disqualified,

b. Its management has not within a three-year period preceding its latest application or proposal been convicted of or had a civil judgment rendered against any of them for:

(1) Commission of fraud or a criminal offense in connection with obtaining, attempting to obtain, or performing a public (Federal, State, or local) transaction, or contract under a public transaction,
(2) Violation of any Federal or State antitrust statute, or
(3) Commission of embezzlement, theft, forgery, bribery, falsification or destruction of records, making any false statement, or receiving stolen property,

c. It is not presently indicted for, or otherwise criminally or civilly charged by a governmental entity (Federal, State, or local) with commission of any of the offenses listed in the preceding subsection 2.b of this Certification,

d. It has not had one or more public transactions (Federal, State, or local) terminated for cause or default within a three-year period preceding this Certification,

e. If, at a later time, it receives any information that contradicts the statements of subsections 2.a – 2.d above, it will promptly provide that information to FTA,

f. It will treat each lower tier contract or lower tier subcontract under its Project as a covered lower tier contract for purposes of 2 CFR part 1200 and 2 CFR part 180 if it:

(1) Equals or exceeds $25,000,
(2) Is for audit services, or
(3) Requires the consent of a Federal official, and

g. It will require that each covered lower tier contractor and subcontractor:
(1) Comply and facilitate compliance with the Federal requirements of 2 CFR parts 180 and 1200, and
(2) Assure that each lower tier participant in its Project is not presently declared by any Federal department or agency to be:

a. Debarred from participation in its federally funded Project,
b. Suspended from participation in its federally funded Project,
c. Proposed for debarment from participation in its federally funded Project,
d. Declared ineligible to participate in its federally funded Project,
e. Voluntarily excluded from participation in its federally funded Project, or
f. Disqualified from participation in its federally funded Project, and

3. It will provide a written explanation as indicated on a page attached in FTA's TEAM-Web or the Signature Page if it or any of its principals, including any of its first tier Subrecipients or its Third Party Participants at a lower tier, is unable to certify compliance with the preceding statements in this Certification Group.

Certification

Contractor _____

Signature of Authorized Official _____ Date ___/___/___

Name and Title of Contractor's Authorized Official _____

Attachment C

Conflict of Interest Questionnaire

Denton County
Transportation Authority

CONFLICT OF INTEREST QUESTIONNAIRE

FORM CIQ

For vendor or other person doing business with local governmental entity

This questionnaire reflects changes made to the law by H.B. 1491, 80th Leg., Regular Session.

This questionnaire is being filed in accordance with Chapter 176, Local Government Code by a person who has a business relationship as defined by Section 176.001(1-a) with a local governmental entity and the person meets requirements under Section 176.006(a).

By law this questionnaire must be filed with the records administrator of the local governmental entity not later than the 7th business day after the date the person becomes aware of facts that require the statement to be filed. *See* Section 176.006, Local Government Code.

A person commits an offense if the person knowingly violates Section 176.006, Local Government Code. An offense under this section is a Class C misdemeanor.

OFFICE USE ONLY

Date Received

1 **Name of person who has a business relationship with local governmental entity.**

2 ☐ **Check this box if you are filing an update to a previously filed questionnaire.**

(The law requires that you file an updated completed questionnaire with the appropriate filing authority not later than the 7th business day after the date the originally filed questionnaire becomes incomplete or inaccurate.)

3 **Name of local government officer with whom filer has employment or business relationship.**

_____
Name of Officer

This section (item 3 including subparts A, B, C & D) must be completed for each officer with whom the filer has an employment or other business relationship as defined by Section 176.001(1-a), Local Government Code. Attach additional pages to this Form CIQ as necessary.

A. Is the local government officer named in this section receiving or likely to receive taxable income, other than investment income, from the filer of the questionnaire?

☐ Yes ☐ No

B. Is the filer of the questionnaire receiving or likely to receive taxable income, other than investment income, from or at the direction of the local government officer named in this section AND the taxable income is not received from the local governmental entity?

☐ Yes ☐ No

C. Is the filer of this questionnaire employed by a corporation or other business entity with respect to which the local government officer serves as an officer or director, or holds an ownership of 10 percent or more?

☐ Yes ☐ No

D. Describe each employment or business relationship with the local government officer named in this section.

4

_____ _____
Signature of person doing business with the governmental entity Date

Attachment D

Bidder's Questionnaire

1. Name of Contractor ("Business", herein)

2. Doing Business As (other business name if applicable)

3. Federal Tax ID Number

4. Business Mailing Address (include City/State/Zip Code)

5. Business Email Address

6. Business Telephone | Business Fax Number

7. Business Type
☐Individual ☐Partnership ☐Corporation ☐Joint Venture

8. Number of Years in Business

9. Annual Gross Revenue for the past three years (M = Millions)
☐$1M or Less ☐$1M-$5M ☐$5M-$10M ☐$10M-$16M ☐$16M+

10. Number of Employees
☐100 or Less ☐101-500 ☐501-750 ☐751-1,000 ☐1,001+

11. Is Business a DBE Firm?
☐Yes ☐No

12. Is Business Owned by Minority Ethnicity?
☐Yes ☐No

13. Ethnic Group
☐Black American ☐Asian Pacific American ☐Other
☐Hispanic American ☐Subcontinent Asian American
☐Native American ☐White/Caucasian

14. Woman Owned?
☐Yes ☐No

15. Veteran Owned
☐Yes ☐No

16. Type of Work Performed
☐Construction ☐Wholesale/Distributor
☐Manufacturing ☐Professional Service
☐Retail ☐General/Technical Service

17. Has the Business, or any officer or partner thereof, failed to complete a contract?
☐Yes ☐No

18. Is any litigation pending against the Business?
☐Yes ☐No

19. Has the Business ever been declared "Not Responsible"
☐Yes ☐No

20. Has the Business been debarred, suspended, proposed for debarment, and declared ineligible, voluntarily excluded or otherwise disqualified from bidding, proposing or contracting?
☐Yes ☐No

21. Has the Business ever been a defaulter, as principal, surety or otherwise?
☐Yes ☐No

22. Has the government or other public entity requested or required enforcement of any of its rights under a surety agreement on the basis of a default or in lieu of declaring the Business in default?
☐Yes ☐No

23. Is the Business in arrears upon a contract or debt?
☐Yes ☐No

24. Are there any proceedings pending relating to the Business' responsibility, debarment, suspension, voluntary exclusion or qualification to receive a public contract?
☐Yes ☐No

25. Have liquidated damages or penalty provisions been assessed against the Business for failure to complete the work on time or for any other reason?
☐Yes ☐No

26. If a "yes" response is given to questions 17-25, please provide a detailed explanation including dates, references to contract information, contacts, etc. (attach additional pages as necessary). DCTA reserves the right to inquire further with respect thereto.

27. List the name and business address of each person or each entity which has a 10% or more ownership or control interest in the Business (attach additional pages as necessary).

I, individually and on behalf of the business named above, do by my signature below certify that the information provided in this questionnaire is true and correct. I understand that if the information provided herein contains any false statements or any misrepresentations: 1) DCTA will have the grounds to terminate any or all contracts which DCTA has or may have with the business; 2) DCTA may disqualify the business named above from consideration for contracts and/or 3) DCTA may have grounds for initiating legal action under federal, state or local law. ***Note: This questionnaire is also a certification form; the information requested will be used to determine small business status as per 13 CFR Part 121. Additionally, this information will allow DCTA to report the amount of subcontracting activity for DCTA.***

Printed Name _____

Title _____

Signature of Owner _____

Date _____

Email Address _____

(Owner, CEO, President, Majority Stockholder or Designated Representative)
Questions about this document should be directed to the Procurement Manager

Attachment E

Affidavit of Non-Collusion

AFFIDAVIT OF NON-COLLUSION

Affidavit of Non-Collusion

I hereby swear (or affirm) under the penalty for perjury:

1. That I am the proposer (if the proposer is an individual), a partner in the proposal (if the proposer is a partnership), or an officer or employee of the proposing corporation having authority to sign on its behalf (if the proposer is a corporation);

2. That the attached proposal(s) has been arrived at by the proposer independently and have been submitted without collusion and without any agreement, understanding, or planned common course of action with any other Proposer or materials, supplies, equipment, or service described in the invitation to proposal, designed to limit independent proposals or competition;

3. That the contents of the proposal or proposals has not been communicated by the proposer or its employees or agents to any person not an employee or agent of the proposer or its surety on any bond furnished with the proposal or proposals, and will not be communicated to any such person prior to the official opening of the proposal or proposals; and

4. That I have fully informed myself regarding the accuracy of the statements made in the affidavit:

Signed_____

Firm Name_____

Subscribed and sworn to before me this day of , 20

Notary Public_____

My Commission expires_____, 20

Proposer's E.I. Number_____(number used on Employer's Quarterly Federal Tax Return)

Exhibit A

Sample Task Order

Denton County Transportation Authority
Task Order

Task Number:	1	Project ID:	Grant #
Contractor:	CONTRACTOR		

PROJECT INFORMATION		
Name:	A&E Services	
DCTA Account Code: (Contract to be Billed Under)		Approved Budget Yes☒ No☐
Project Lead		
Requested By		
Cost Estimate		
Not to Exceed Budget	$10,000	

DESCRIPTION
(Include Scope, Cost, and Deliverables with Schedule)
Services to be performed on the above project per the scope and fee schedule provided CONTRACTOR
Attached: SCOPE OF WORK, FEE SCHEDULE

SIGNATURES/APPROVALS			
Contractor:		Date	
COO:		Date	
James C. Cline, Jr. DCTA President		Date	

SAMPLE

Question and Answers for Bid #17-27 - On-Call Taxi and Non-Emergency Transportation Services

Overall Bid Questions
There are no questions associated with this bid.

July 13, 2017

ADDENDUM NO. 1

RFP 17-27 On-Call Taxi and Non-Emergency Transportation Services

Addendum must be acknowledged below and returned with the submittal.

Change 1
Ref: SCOPE OF WORK, TERMS AND CONDITIONS
Section 7.2.4

Original text

Utilize a prequalified list of passengers provided by agency or its partners to provide specific transportation services under agency determined parameters, and train drivers accordingly to qualify passengers and process any fare subsidies.

Change to

Utilize a prequalified list of passengers provided by agency or its partners to provide specific transportation services under agency determined parameters, and train drivers accordingly to process any fare subsidies.

Jeremy Lewallen
Procurement Coordinator

Acknowledged by: _____ Date: _____
Firm/Representative

July 18, 2017

ADDENDUM NO. 2

RFP 17-27 On-Call Taxi and Non-Emergency Transportation Services

Addendum must be acknowledged below and returned with the submittal.

Change 1

The due date/time for proposals has changed. The new date/time is Friday, July 28th at 3:00PM.

Change 2

Ref: Federal Clauses

Original text

Drug and Alcohol Abuse and Testing
Operational service contracts except micro-purchases ($3,500 or less, except for construction contracts over $2,000)

The Contractor agrees to comply with the following Federal substance abuse regulations: a. Drug-Free Workplace. U.S. DOT regulations, "Drug-Free Workplace Requirements (Grants), " 49 C.F.R. Part 32, that implements the Drug-Free Workplace Act of 1988 as amended, 41 U.S.C. §§ 8103 et seq., and 2 CFR part 182, b. Alcohol Misuse and Prohibited Drug Use. FTA Regulations, "Prevention of Alcohol Misuse and Prohibited Drug Use in Transit Operations," 49 USC 5331, as amended by Map-21, 49 CFR part 40, 49 USC chapter 53, 49 CFR Part 655, to the extent applicable.

Change to

Drug and Alcohol Abuse and Testing
Operational service contracts except micro-purchases ($3,500 or less, except for construction contracts over $2,000)

The Contractor agrees to comply with the following Federal substance abuse regulations: Alcohol Misuse and Prohibited Drug Use. FTA Regulations, "Prevention of Alcohol Misuse and Prohibited Drug Use in Transit Operations," 49 USC 5331, as amended by Map-21, 49 CFR part 40, 49 USC chapter 53, 49 CFR Part 655, to the extent applicable.

Jeremy Lewallen
Procurement Coordinator

Acknowledged by: _____ Date: _____
Firm/Representative

ORIGINAL

Proposal for

On-Call Taxi and Non-Emergency Transportation Services 17-27

Presented to:

Denton County Transportation Authority (DCTA)

Attention: Jeremy Lewallen
1955 Lakeway Drive Suite 260
Lewisville, TX 75057

Due: July 28th, 2017 at 3:00 pm

Submitted by:

IRVING HOLDINGS

Irving Holdings, Inc.
2515 Irving Blvd, Dallas, Texas 75207
Contact: Jack D. Bewley President
(817) 534-7777 Fax (817) 535-7450

Proposal for

On-Call Taxi and Non-Emergency Transportation Services 17-27

Presented to:

Denton County Transportation Authority (DCTA)

Attention: Jeremy Lewallen
1955 Lakeway Drive Suite 260
Lewisville, TX 75057

Due: July 28th, 2017 at 3:00 pm

Submitted by:

IRVING HOLDINGS

Irving Holdings, Inc.
2515 Irving Blvd, Dallas, Texas 75207
Contact: Jack D. Bewley President
(817) 534-7777 Fax (817) 535-7450

Notice of Copyright and Proprietary or Confidential Content

This document contains various copyrighted information, proprietary information, trade secrets and confidential information. We claim all rights and protections to this information that are allowed by appropriate law and/or the terms and conditions of the RFP for responsive proposals. Except as required by the terms and conditions of the RFP process or by any applicable law or regulation, this proposal shall not be duplicated, used or disclosed in whole or in part for any purpose other than to evaluate and process this proposal. (Copyrighted material may also be duplicated for these purposes.) If a contract is awarded to this offeror as a result of, or in connection with the submission of this proposal, DCTA shall have the right to duplicate, use, or disclose the information to the extent provided for in the RFP or the resulting contract. (These restrictions do not limit the right to use any information that may be contained in this proposal if it is obtained also from another source without a prohibiting restriction.) All other rights are reserved, including any available protection against release of information herein that may be exempt from release under any applicable public records laws. If any restriction in this paragraph is not allowed by the terms and conditions of the RFP for responsive proposals, or by any applicable law or regulation, the restriction is hereby waived.

IRVING HOLDINGS

2515 Irving Boulevard, Dallas, Texas 75207
(817) 534-7777 Fax (817) 535-7450

July 28, 2017

Mr. Jeremy Lewallen
Denton County Transportation Authority (DCTA)
1955 Lakeway Drive Suite 260
Lewisville, TX 75057

RE: On-Call Taxi and Non-Emergency Transportation Services Solicitation 17-27

Ladies and Gentlemen:

On behalf of Irving Holdings, Inc. ("Irving Holdings"), I am pleased to submit the attached in response to the above captioned Request for Proposals. Unless otherwise specified herein or in the RFP, our price proposal is based on the award of all line items in the RFP and Addendum #1. The attached proposal will result in an exceptional level of service to users and a service that DCTA can be proud.

Irving Holdings, Inc., is a Texas corporation in good standing with full qualifications to conduct business in the State, and in the regular business of general and specialty transportation and related services, incorporated on April 26, 2000, and headquartered at the address on this letter. Our tax ID number is 75-2876032. This proposal is valid for 60 days.

Irving Holdings is unique that as a Ride Sourcing company, we have a FULL dispatch located in the city of Dallas that operates 24/7/365. We can offer the customers and DCTA a LIVE and LOCAL person to call or meet face-to-face. We can also offer transportation requests for the unbanked (a person with no bank account or credit cards), the person without internet service or non-smartphone user, AND the elderly disabled! The unbanked can pay with cash in the vehicle. The person without a smartphone or internet service can call our dispatch for a vehicle to be dispatched to them. We also have the smartphone App and an internet site for customers to book their ride requests. We also have the ability to provide prepaid debit cards that can be used to pay inside the vehicle, on the App, or on the internet. All this is ALREADY IN PLACE! No need for long development times!

As will be seen, we in fact propose to exceed many of the minimum RFP requirements. Additionally, our performance of these services will at all times comply with all applicable laws and regulation. We currently possess, and will at all times possess during the operation of this service all required licenses, permits, certifications, approvals, personnel, equipment, facilities and authorizations necessary to perform all obligations in connection with this RFP.

As President and Chief Executive Officer, I guarantee the key personnel named in the staffing plan will be assigned to the project, unless their employment is terminated. I, the undersigned, am fully authorized to execute contracts and to bind the corporation, and I can be reached at (817)534-7777. My e-mail address is jack.bewley@irvingholdings.net. We look forward to discussing this proposal with you in the near future.

Sincerely,

Jack D. Bewley
President

Tab 1 - Firm's Qualifications and Experience

Irving Holdings is a Dallas based Texas Corporation that specializes in passenger transportation including on-demand responsive, scheduled, contracted and Paratransit services. We have provided on-demand non-emergency transportation services in the Metroplex. Of companies that specialize in serving a Metropolitan area, Irving Holdings has grown to be one of the nation's largest of its kind. We have continuously followed our mission of promoting the Metroplex inclusive of Dallas, Tarrant, Denton and Collin counties, the State of Texas, our residents and local businesses. Our executives, our managers, our employees, our subcontractors, and our providers are all based in the Metroplex.

Irving Holdings is unique that as a Ride Sourcing company, we have a FULL 24/7/365 dispatch located in the city of Dallas. We can offer the customers and DCTA a LIVE and LOCAL person to call or meet face-to-face. We can also offer transportation requests for the unbanked, the person without internet service or non-smartphone user, and the elderly disabled! The unbanked can pay with cash in the vehicle. The person without a smartphone or internet service can call our dispatch for a vehicle to be dispatched to them. We also have the ability to provide prepaid debit cards that can be used to pay inside the vehicle, on the App, or on the internet. We also have the availability of providing true rideshare rides – where riders are matched with others heading in the same direction.

Providing *"Quality, Value and Service"* has been the hallmark of Irving Holdings, and it is largely responsible for the success of this company in the field of on-demand transportation as well as paratransit and other innovative services as requested in this proposal.

Our senior management team likewise has a consistent history of outstanding performance. The following sections demonstrate the Irving Holdings commitment and experience in paratransit, on-demand transportation and related modes.

Experience Working with Transit Agencies and Public Sector / Contract Experience and References

Below are references which are with local transit agencies and the public sector to provide on-demand transportation services within the past three years. Irving Holdings has been continuously awarded contracts in the Metroplex because of our extensive experience, flexibility and expertise in working with both transit agencies, and the public sector. The full information regarding each of the references is contained in Tab 3 – References.

- DART Paratransit Services, MV Transportation Prime, IHI Subcontractor
- DART - Collin County Rides, Mobility Impaired and Senior Program
- City of Arlington, Handitran
- City of Plano, Senior Rides
- Fort Worth Transportation Authority (The-T), Mobility Impaired Transportation Services (MITS)
- DART Emergency Ride Home Program
- DCTA, Taxi Services and Collin County Transit taxi voucher program
- City of Richland Hills, Mobility Impaired and Senior Program
- NCTCOG CCARTs Replacement New Freedom for Mobility Impaired and Seniors (evolved into the DART – Collin County Rides)

All of these are current programs that we operate today with the exception of NCTCOG which the contract was fully performed and reached the end of term in 2014 and the City of Richland Hills that reached its end of term April 30, 2017.

Experience Working Providing Similar Service

Irving Holdings has more than 1,600 drivers, 80+ employees, and more than 1,000 vehicles of which in excess of 150 vehicles are wheelchair accessible currently operating in the Dallas Fort Worth Metroplex. Our company dispatches more than 6,000 trips daily, of which approximately 3,000 are Paratransit wheelchair accessible trips similar to the trips requested in the proposal.

This past November 6th election, the City of Richland Hills, had on their ballot and option to vote whether to maintain their relationship with the Fort Worth Transportation Authority (The T). That referendum passed with The T discontinuing service to the residents on Thanksgiving Day. Irving Holdings began taking the reservations, scheduling of trips beginning on November 19 to provide paratransit and senior transportation to the citizens of Richland Hills on the following day that The T stopped providing service.

A similar scenario occurred with working with NCTCOG. When CCARTS (Collin County Area Rural Transit Service) abruptly suspended service, NCTCOG contacted Irving Holdings, to step in to provide the residents in Collin County with wheelchair and ambulatory service. Irving Holdings was provided the list of eligible riders and then immediately began taking the calls for scheduling transportation, routing and dispatching the drivers and providing NCTCOG all the required reporting for this federally funded program.

Irving Holdings can do the same for DCTA's On-Call Taxi and Non-Emergency Transportation Services request to have adequate drivers and vehicles, provide the project management needed, dispatching and providing detailed reports to the Agency. As stated by one of the presenters in the February 13, 2017 Mobility-On-Demand Working group meeting hosted by NCTCOG, Irving Holdings has been able to provide DART with full reporting information and has been flexible and worked to meet all of DART's demands for their contract with Irving Holdings.

We also bring great experience managing employee drivers / independent contractor / subcontracted service providers on this project and on the other projects referenced above. We will be bringing this experience to bear on the Denton County Transportation Authorities contract and the management of the drivers, maintenance and staff employees. We discuss this experience in greater detail throughout this proposal.

The knowledge and experience we have gained operating these many programs has helped us adapt to ridership growth, and plan for efficient expansion of services. We have a history of expertly managing growth with every program we operate.

Other Highlights of Irving Holdings:

- Paratransit services are also provided to the City of Arlington Handitran Program using both wheelchair accessible and minivans.
- Provide over 2,000 trips per day for the DART paratransit program in wheelchair accessible vehicles.

- Provided paratransit service for the Fort Worth Transportation Authority ("The T") Mobility Impaired Transportation Service ("MITS") Program.
- Operates all paratransit and senior transportation respectively for the City of Richland Hills
- All vehicles operate utilizing global positioning computer systems (GPS).
- Average daily dispatch is more than 6,000 trips per day.
- Our personnel resources include 80+ employees, and each member of our senior management team has more than 20 years of paratransit service experience.
- Irving Holdings currently has its operating facilities Dallas. These facilities provide all needed maintenance operations, driver personnel, financial offices, dispatch operations and administrative functions.
- All reservations and dispatch operations are located at the 2515 Irving Blvd, Dallas office. This facility also has an on-site generator to allow us to maintain the automation systems, telephones, dispatch operations and maintain lights in the event of a power failure. In the event of a power failure, the dispatch continues to be done at the Irving office with backup generator.

Overall Approach & Methodology

Irving Holdings' understands that this contract for DCTA will be to provide non-emergency transportation services within member and non-member communities in areas where the agency determines that fixed-route traditional transportation services are unavailable and/or not a viable option.

Irving Holdings has over 17 years of experience providing transportation services to the general public as a taxicab company and numerous transit authorities, governmental contracts with the public sector and paratransit.

Irving Holdings is unique that as a Ride Sourcing company we have a FULL dispatch located in the city of Dallas. We can offer the customers and DCTA a LIVE and LOCAL person to call or meet face-to-face. We can also offer transportation requests for the unbanked (someone without a bank or credit cards), the person without internet service or non-smartphone user, AND the elderly disabled! The unbanked can pay with cash in the vehicle. The person without a smartphone or internet service can call our dispatch for a vehicle to be dispatched to them. We also have the ability to provide prepaid debit cards that can be used to pay inside the vehicle, on the App, or on the internet. All of these above items are components of the RFP which we already have in place, without any development time.

We not only have the ability to meet the current demand we can easily handle any projected increases in ridership.

Project Management Team

The designated project manager to oversee the operation will be Mr. Charlie Johnston. Mr. Johnston has over eight (8) years as Paratransit Manager for Irving Holdings. He is certified as Passenger Service and Safety (PASS) Train the Trainer, Easter Seals Project ACTION, National Safety Council Trainer for CPR/First Aid/AED, and the Drug and Alcohol Program Manager (DAPM). Charlie will serve as the point of contact for DCTA and will oversee all services under this contract. He has also been involved with

comparable projects held by Irving Holdings, which include the DART Paratransit Program, City of Arlington Handitran Program, FWTA MITS Program and DCTA's Collin County Transit program for McKinney Urban Transit District.

Ms. Liz George is the financial manager for Irving Holdings. Ms. George oversees the billings, driver manifests, and human resource including the reservationist and schedulers needed. Ms. George has an SPHR and SHRM-SCP certifications and an Insurance adjuster- all lines license.

Irving Holdings' dispatch is available 24/7/365 to call that will be answered by our reservationists that will assist the DCTA clients with scheduling their trips that don't have a smartphone or internet availability. Once the trips are scheduled, the trips will be dispatched to expedite transportation services in full compliance with the specification of bid.

Below is our organizational chart for the project management team.

Irving Holdings, Inc

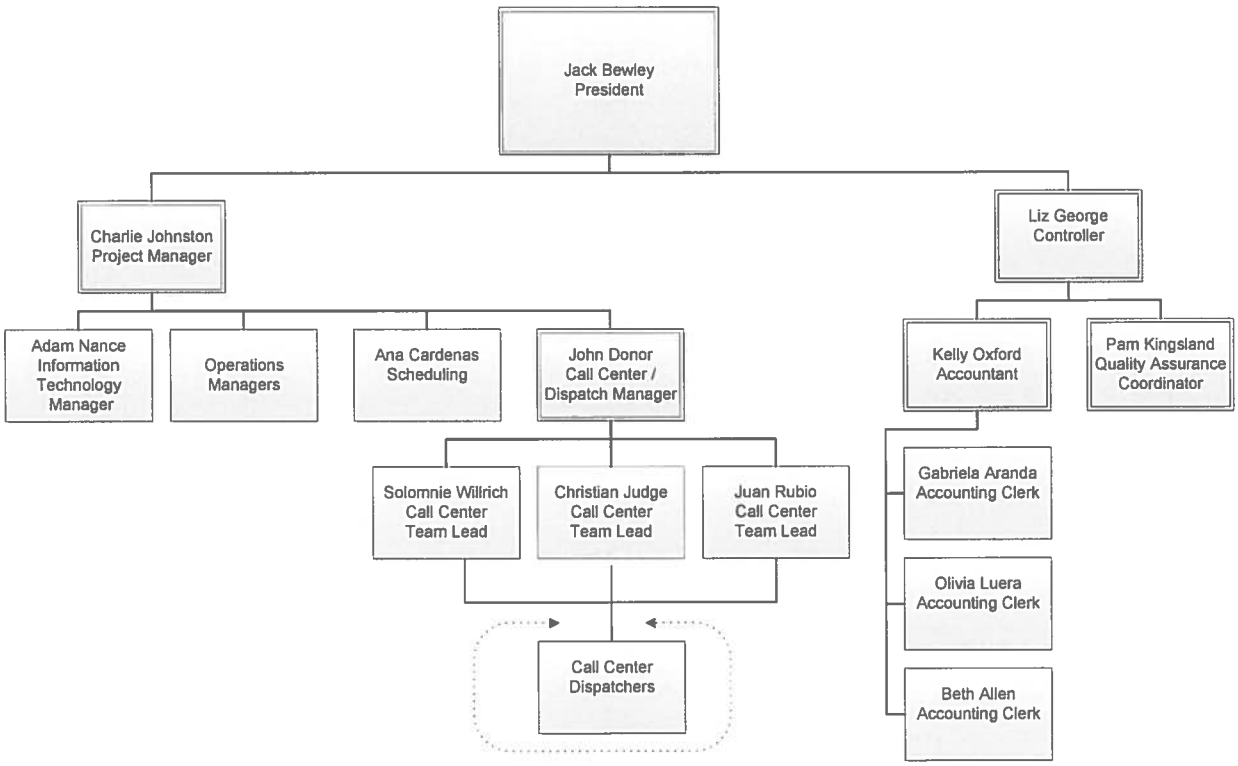

Reporting Requirements

Irving Holdings has a computerized dispatching program that we can manage clients, book and schedule trips, track faring and run reports. The software also sends trip information directly to a mobile device located inside the taxicab which significantly reduces cell phone usage. We will provide all the necessary reporting elements to DCTA as we do NOT consider this to be proprietary data exclusive to IHI.

Tab 2 – Project Approach

A. Introduction to Firm

The preceding section under Tab 1 fully explained our approach to meeting the scope of services defined herein.

Below in section B, we indicate our understanding of the scope of work, the project plan for each of the elements requested and how Irving Holdings will perform the various services.

B. Address all elements of Project Scope

Transportation Voucher Program:
Irving Holdings can provide an electronic voucher program that will allow for customers to easily pay for a ride subsidized by the agency. This program is currently in place for the McKinney Urban Transit District that is utilizing the Collin County Transit debit cards that are used in this program. The debit cards are loaded with funds from both the customer and the matching amount that is agreed upon by DCTA. The matching portion is billed to DCTA on a weekly basis. This is a "closed loop" debit card. Ambulatory transportation would be provided with two hour notice, request by passengers with special mobility needs are encouraged to make trip requests 24 hours in advance on the day prior to requested service.

The benefits of using an electronic payment system include:

- Simplifies fare payment
- Captures both the driver and patron information
- Captures the meter amount
- The transaction does not go through the banking system and the user can utilize the funds only for transportation
- Geo-fencing rules can be applied
- Balance checks are available in vehicle, on an app, and on line
- Supports for partial payment and maximum fares
- Load values on the cards can be managed
    - How much they can load
    - When they are allowed to load
    - What forms of payments that can be accepted
    - Maximum balances
- Subsidized values can be loaded on the card

Supplemental Service:
Irving Holdings can provide ADA and non-ADA paratransit service utilizing our own fleet of accessible vehicles. As stated earlier in the response, we provide over 3000 wheelchair accessible trips daily. We have drivers that perform "routes" which are assigned to the driver with a computerized dispatch the day before for the services that we provide to DART, City of Arlington's Handitran, and Fort Worth Transportation Authority MITS programs. The program drivers average 15-30 trips per route. In each of these programs, Irving Holdings collects funds from the passengers either using a coupon or the

passenger has a prepaid card that can be used. Based on our experience providing similar services, we can meet all the requirements of the supplemental services requested.
Provided DCTA creates route(s) with 15-30 trips per day for a driver, Irving Holdings will properly vet these driver(s) to assure that the meet the USDOT/FTA drug and alcohol testing policies.

For our ADA vehicles, we utilize Dodge Caravan conversions or a similar make and model that have a rear ramp which will seat three ambulatory and one standard wheelchair or a side load ramp van with a four person capcity plus one standard wheelchair.

As a comparison for consideration for why you want to do a complete route utilizing Irving Holdings is that it is a huge cost savings to DCTA. Generally Paratransit expenditures by US Transit agencies often exceed 30% of the operating budget and the direct operating cost per passenger trip for a transit agency is generally in excess of $30 per trip. Irving Holdings has shown with both the services that we provide to DART and the City of Handitran where we provide supplemental taxi service that are more cost efficient than the traditional bus system used. Also we have a 92% On Time Performance (OTP) consistently providing service. Looking at the cost of a DCTA bus, compared to an average of less than $20 per passenger utilizing Irving Holdings for supplemental service, the cost savings alone of creating an entire route(s) that is performed by Irving Holdings will allow DCTA to direct the paratransit expenditures to expanding your fixed route service dramatically.

Real-Time Demand Response Service
Irving Holdings also has a fleet of taxicabs which by definition is a demand responsive transportation provider. We provide over 6000 demand responsive trips daily in the Dallas/Fort Worth metroplex! Irving Holdings can work with DCTA to expand and enhance existing service through the agency's demand response transportation program to supplement existing trips. The various payment options that can be utilized for this service is discussed below in fare payment structures.

Innovative Transit Solutions
Our mobile device Curb App, an online platform accessible via a website which is available for free download through the Apple store and Google Play

- For customer that are unable to access mobile devices the following methods are available:
  - Going to our website and clicking the option of "book taxi online" (www.dallasyellowcab.com) ,
  - the Curb "concierge" website for those that will book trips for someone else.
  - for the unbanked or ones with no technology they can call our dispatch office and book their transportation

All these options are explained fully below.

Irving Holdings can provide on-demand ride services to

- the general public on certain dates and certain times as determined by DCTA for trips originating or terminating at rider-specified locations and originating or terminating within a geofenced zone,
- groups of predetermined eligible customers meeting specific criteria for participation set by DCTA
- linked and group ride trips booked through an online platform to assist with service optimization
- ambulatory paratransit ride services
- first and last mile connections
- connections to specific employer or employment clusters

- suburban & low-density areas
- transit locations including A-train commuter rail stations
- late night services and trips to entertainment destinations and special events

Fare Payment Structures

Irving Holdings can meet the following fare payment structures (these are explained fully below):

- DCTA-provided subsidy toward the total trip cost for each qualifying one-way trip which can be flexible and capable of being adjusted based on changing program and budget needs
- Fixed fare for a passenger with the ability for DCTA to subsidize the cost for the remainder of the trip at the regular rates
- Deductions of fare from a preloaded passenger account
- Fare payment options for unbanked customers
- Temporary or promotional fare discounts that passengers can access through the entry of a promotional code

Policy and Administrative Factors

Irving Holdings has the ability to provide DCTA with ridership reports within an agreed upon time frame and the reporting requirements that are explained more fully below:

- Ability to ensure an adequate supply of drivers at defined geographic areas and times
- Ability to coordinate with DCTA Communications and Marketing Team on promoting programs to the general public and designing and producing marketing materials for distribution to potential riders.
- Availability of additional tracking measures of program success, such as ride information by location, reporting by time period, and trip origin and destination information
- Ability of contractor to work within current government regulatory framework for transportation services and to adapt service proposals and promotional agreements to different public transportation funding sources
- Ability to provide ridership reports with invoices timely

Irving Holdings uses the technology company Curb's passenger booking application which already meets all the requirements of the RFP save for a few minor exceptions that can be easily customized for DCTA. Irving Holdings consistently offers the public speedy, convenient, reliable and safe rides. With the use of Curb, Irving Holdings benefits from a sophisticated algorithm to assign the best driver to every ride. With Curb there is the availability of APIs for integration to or from third-party apps or platforms.

Book your trip using an APP



Irving Holdings utilizes "CURB" which offers quick and easy ride-hailing from any iOS or Android smartphone, automatic e-payment with digital receipts and predictable metered fares with no surge pricing. Irving Holdings with Curb is the best option for passengers who want the convenience of e-hail, but also want the safety and predictable pricing or traditional licensed

taxis. It's also the first app with an advance booking feature for cabs.

Using Curb to e-hail a cab is as simple as pressing Book Now on the smartphone app and confirming a pickup location. The app's advance booking feature enables passengers to pre-book from 15 minutes to 24 hours in advance by simply pressing the later button.

You will always ride with a fully licensed professional driver.



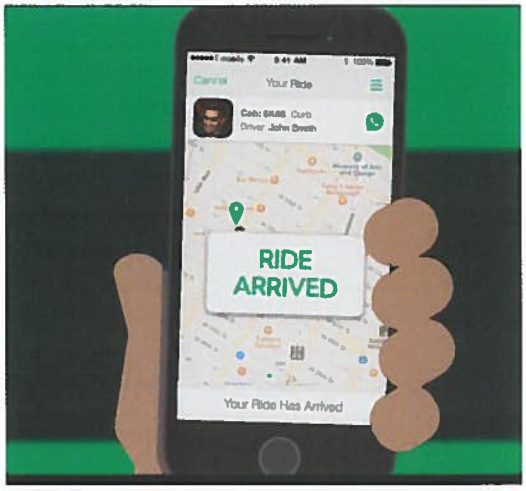

At the end of the ride your payment is automatic using your preselected credit card on file. Or the passenger can also pay in the backseat credit card device or using CASH! There is never any SURGE Pricing.

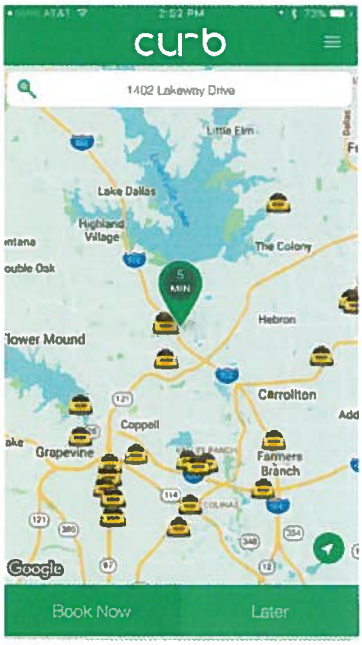

For coverage of the area, this graphic shows the number of vehicles available to provide transportation.

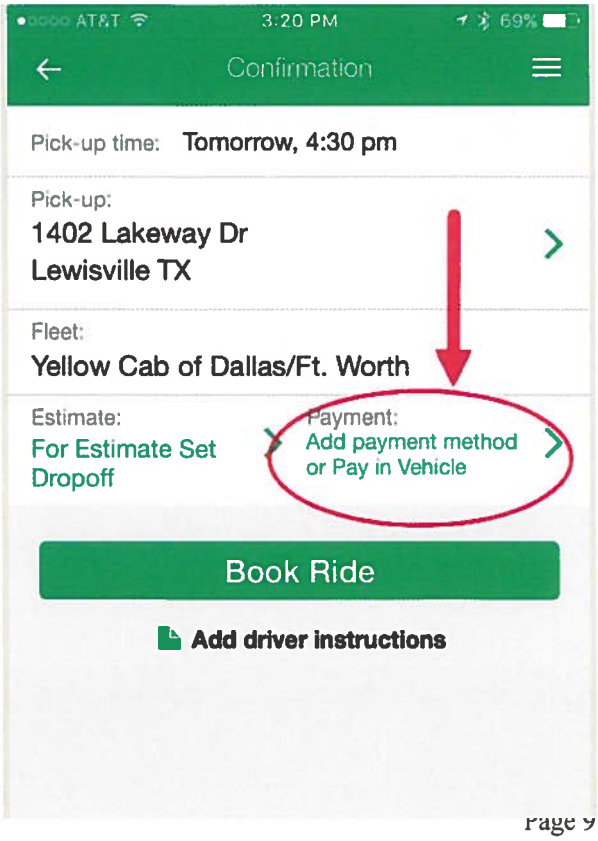

The passenger always has the option to pay inside the vehicle either using the backseat device or pay using CASH!

Book your trip if you have internet connection

If you have an internet connection you can also go to our webpage www.dallasyellowcab.com and click on the BOOK TAXI ONLINE

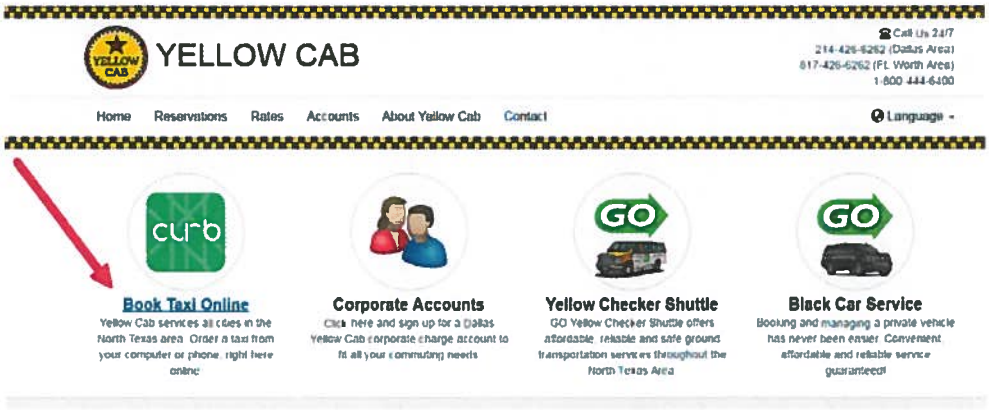

Select when you want to leave:

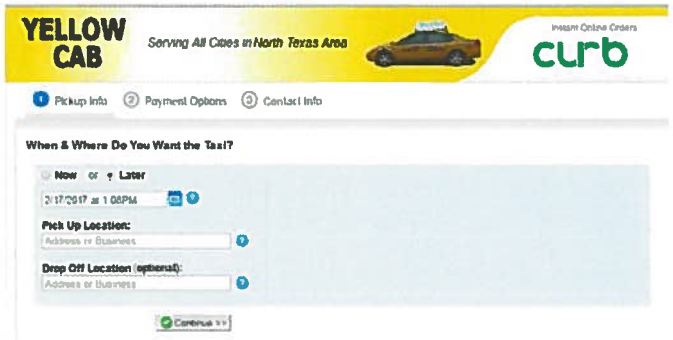

Tell the system how you will be paying for the ride by credit card are "HAND DRIVER PAYMENT IN THE CAR"

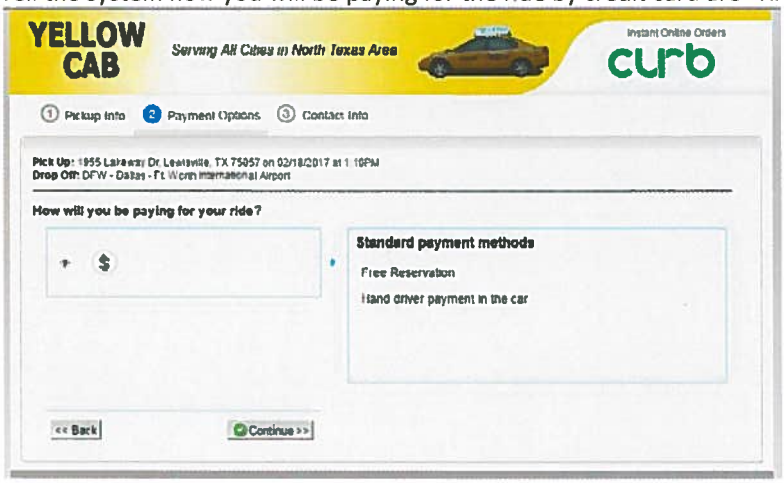

Then complete the your name, cell phone and email and if you want a text message that notifies you when the taxi has been dispatched

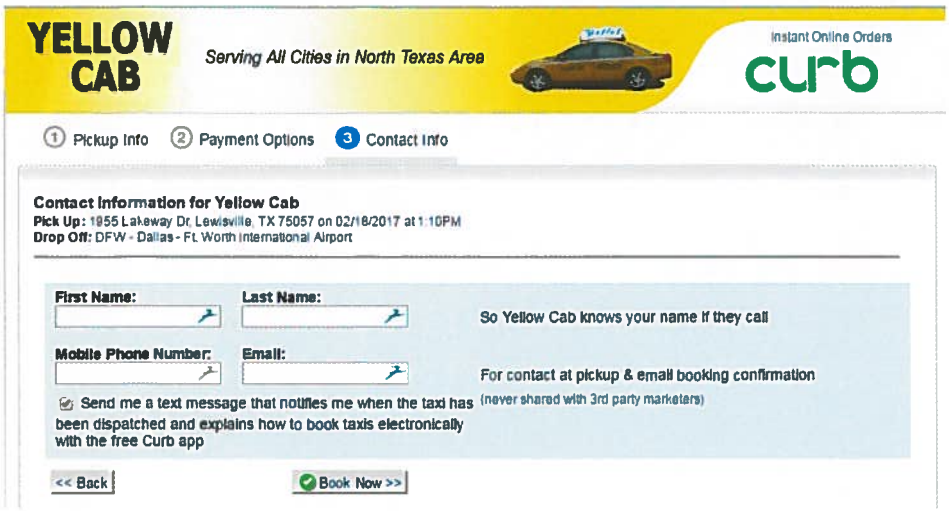

Book your trip if you are unbanked or have no technology

To book your trip you call our 24/7/365 dispatch office at 214-426-6262 or 817-426-6262, provide the code that will be assigned to this program (for reporting purposes) tell them your pickup location, when you want to ride, and if you have any mobility aids.

Methods to pay for your transportation (fare payment options)

The customer has a variety of ways to pay for the transportation.

- If they want to pay by debit card, credit card, PayPal, they can use the App, use the internet, or swipe it themselves using the backseat credit cards machine of the vehicle
- If they want to pay by cash, they can hand the driver cash at the end of their transportation
- If they have a subsidy or a discount and are only to pay a portion of the fare, the passenger will be issued a prepaid debit card (that can only be used in our vehicles) that will be swiped inside the vehicle, and then the driver will fill out a voucher for the portion responsible by DCTA to be billed weekly.
- If DCTA wants issue the "prepaid" debit cards that are preloaded with a fixed amount of money, then DCTA could then provide these to their customers based on the subsidy amount. For example, DCTA would purchase a prepaid card for $100, if the subsidy is 25%, the customer would then purchase the card from DCTA for $25. The entire fare would then be charged on the prepaid card.

The credit card processing data centers are PCI and SSAE 16 certified to ensure end-to-end transactional security for payment processing through both the in-taxi and mobile payment solutions. Passengers are able to securely store payment information in the Curb app, which can be selected as the payment method at the end of a ride.

Because Curb receives real-time taximeter updates, the in-app payment of the metered taxi fare for a ride booked via Curb happens automatically without intervention from the driver or passenger. By registering a credit card in the app and selecting it as the payment method at time of booking, the passenger authorizes payment at the time of booking and Curb processes the payment automatically at the end of the ride. As a protection for drivers, Curb pre-authorizes a set amount at the time of booking

or "pairing' for streethail payment to ensure that the registered card is still active. Curb knows the ride has ended when the taximeter has been stopped. Curb fees are disclosed to the passenger in the app prior to the ride booking, so the passenger is able to verify the cost of the trip at the end of the ride by looking at the displayed metered fare.

When a payment is processed at the end of a Curb trip, a digital, itemized receipt is generated in the Curb app and another is emailed to the passenger as a PDF. Curb trip receipts display fare, tip, and any other applicable fees, tolls, taxes, surcharges, etc. Passengers are able to access past receipts via their Ride History in the Curb app or via their desktop computer by logging into their Curb account at https://my.gocurb.com.

With respect to accessibility features, the Curb app is coded and captioned to allow visually and hearing impaired users to take advantage of the accessibility features of their Android and iOS devices. Leveraging native services, including Talkback and Explore by Touch for Android and Voice Over for iOS, visually impaired passengers can receive audible feedback for the payment screen, including hearing the itemized charges at the time of payment.

The key with Irving Holdings is that when there is a high demand of service needed, there is no SURGE pricing! We have more than 1,000 vehicles and 1,600 drivers in the Metroplex area. We dispatch more than 6,000 trips daily. We have the availability of drivers during times of high demand!

In calendar year 2014, public transit systems across the nation provided 10.7 billion trips—the highest annual ridership number in 58 years—with the number of trips exceeding 10 billion for the seventh year in a row. There is reason to believe that this is just the beginning of a sustained period of growing demand for public transportation as the population of elderly individuals who will become reliant on public transportation increases and as more young people move to urban areas to have greater access to transit options. To keep pace with growing demand, transit operators will need to balance competing priorities to expand service, while continuing to operate existing service, replace and maintain existing capital assets, and ensure that operations are safe for their employees and the riding public.[1]

Now is the time to implement a new framework to support and complement DCTA's organization and its operational structure which Irving Holdings' can assist with as shown above.

Irving Holdings using Curb has several years of experience in managing driver assignment based not only on the closest available vehicle (including location, traffic, time of day, etc.), but also on the overwhelmingly predictive factor of the historic performance of the driver. The Curb model measures driver performance and uses that information to improve driver assignments and the overall rider experience. It is critical for DCTA to adapt to the dynamic changes in technology evolution. The success of this program is not solely dependent on the development, but also on quality. No matter how intuitively a process is designed and functionalities made simple, and "hitches" hinders the usability. Therefore Irving Holdings will conduct testing with DCTA and quality assurance of the application and implementation to assure flawless user experience, smooth operation and meet the overall quality

[1] https://www.transit.dot.gov/sites/fta.dot.gov/files/docs/National%20Public%20Transportation%20Safety%20Plan_1.pdf

aspects of the system. We would provide multiple software testing technologies, tools, platforms and standards which enables us to apply testing strategies and best solutions.

Personnel and Vehicles Policies and Procedures

Driver Qualifications and Background
Irving Holdings drivers are vetted drivers. Irving Holdings requires the drivers to be a minimum of 25 years old with a valid Texas driver's license and three years driving experience, as well as, a clean driving record with no DUI or DWI. Drivers cannot have been convicted of more than three moving traffic violations arising out of separate incidents, or involved in more than one automobile accident in which it could be reasonably determined that the applicant was more than fifty percent at fault within any 12-month period during the preceding 24 months. They must also speak, read and understand English fluently and be able to fill out required forms and record legibly, pass a criminal background check before they are allowed to drive for Irving Holdings that meet the requirements consistent with Dallas City Ordinance 47A.2.2.1 and 47A.2.2.2. They must be a United States citizen or a legal resident with INS employment authorization. In addition, all drivers must possess a valid driver's permit, issued by the municipal government regulating transportation services provided by Irving Holdings. Paratransit drivers are required to successfully complete a state approved defensive driving program on a recurring basis every two years.

Discipline
Irving Holdings is recognized as a company which demands quality service from its drivers. Compliance with the rules and regulations of the company, as well as compliance with the terms and conditions of this contract is monitored and enforced by Charlie Johnston, paratransit manager.

Training Requirements
Irving Holdings has a driver training school at our facility at 2515 Irving Blvd., Dallas, TX 75207, which operates every Thursday. All drivers must successfully complete this training program before they are allowed to drive for Irving Holdings. Training is provided in, but not limited to, the following: passenger assistance techniques, customer relations skills, dress code, sensitivity training, ADA requirements and procedures, computers operation, accident reporting, and company policies. All drivers must successfully complete the program prior to participation in this contract. Paratransit drivers also are trained in DART's "5 Star Service" program to create an extraordinary customer experience when interacting with colleagues, riders, partners and the community.

All drivers are professional drivers with this being their entire livelihood. Irving Holdings verifies that they have a valid City of Dallas permit prior to driving for us. Both Irving Holdings and the City of Dallas do background checks (national) and MVR's on drivers to assure that the drivers have no DWI, DUI and that they meet the requirements of Chapter 521 Texas Transportation Code.

Vehicles
All Irving Holdings vehicles will be easily identified as a licensed taxi cab with the company name and company phone number located on the outside of the vehicle. If there is ever a question regarding the vehicle or the driver of that vehicle at any time, the passenger can call our dispatch to speak to a live person.

Our vehicles are current with state issued registration and safety inspection and also must undergo a 31 point inspection.

C. Additional Administrative Factor Information

- Irving Holdings has a fully staffed dispatch center located in Dallas with telephone customer support 24/7/365, management and support staff is available M-F, 8am-5pm, to assist with the activation of the agency-provided subsidy or any other issue with service. DCTA management will also be provided the cell phone number of the project manager.
- Rates will be based on regulated taxi meter rates set by city ordinances for hailable vehicles.
- The key with Irving Holdings is that when there is a high demand of service needed, there is no SURGE pricing! We have more than 1,000 vehicles and 1,600 drivers in the Metroplex area. We dispatch more than 6,000 trips daily. We have the availability of drivers during times of high demand!
- For trips that are billed directly to DCTA will be emailed on a weekly basis. Any vouchers used will be attached to the invoice. See attached sample invoice.

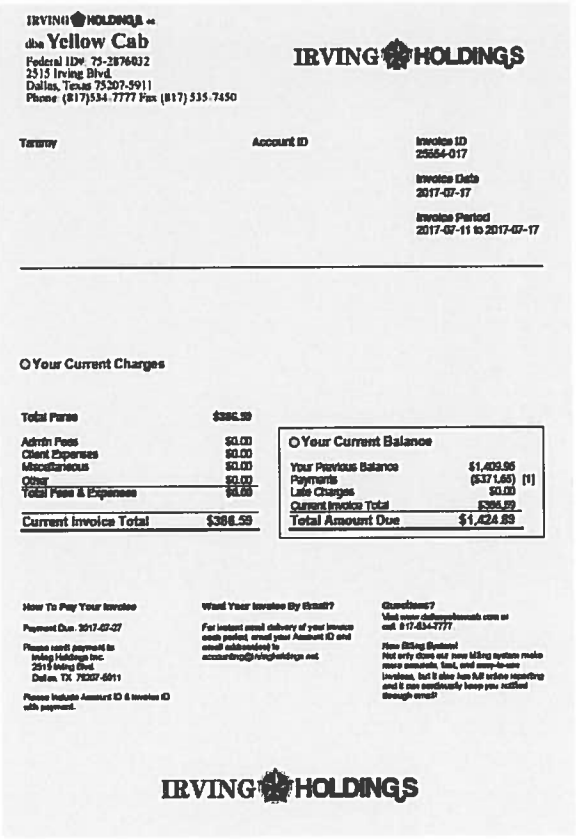

IRVING HOLDINGS dba Yellow Cab
Federal ID#: 75-2876032
2515 Irving Blvd.
Dallas, Texas 75207-5911
Phone: (817)534-7777 Fax (817) 535-7450

IRVING HOLDINGS

Tarrant | Account ID | Invoice ID 25554-017 | Invoice Date 2017-07-17 | Invoice Period 2017-07-11 to 2017-07-17

Your Current Charges

Total Fares	$386.59
Admin Fees	$0.00
Client Expenses	$0.00
Miscellaneous	$0.00
Other	$0.00
Total Fees & Expenses	$0.00
Current Invoice Total	$386.59

Your Current Balance

Your Previous Balance	$1,409.95
Payments	($371.65) [1]
Late Charges	$0.00
Current Invoice Total	$386.59
Total Amount Due	$1,424.89

How To Pay Your Invoice
Payment Due: 2017-07-27
Please send payment to Irving Holdings Inc. 2515 Irving Blvd. Dallas, TX 75207-5911
Please include Account ID & Invoice ID with payment.

Want Your Invoice By Email?
For instant email delivery of your invoice each period, email your Account ID and email address(es) to accounting@irvingholdings.net

Questions?
Visit www.dallascabcab.com or call 817-534-7777

New Billing System!
Not only does our new billing system make more payments, fast, and easy-to-see invoices, but it also has full online reporting and it can continually keep you notified through email!

IRVING HOLDINGS

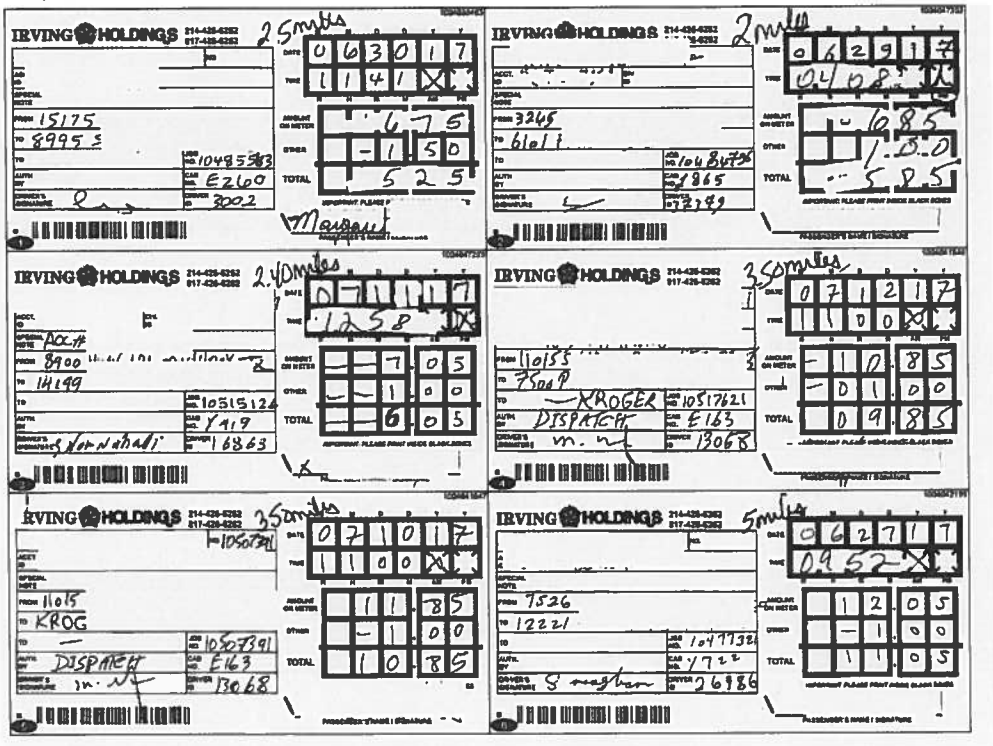

- Below is a sample of a ridership report that could be used to measure service success.

Sample Report

ACCT CARD NR	BADGE NR NUM	CALLSIGN	CREATED DTM	PASSENGER NAME	TELEPHONE NR	PICKUP STREET NR	PICKUP STREET	DEST STREET NR	DEST STREET	DRIVER NOTES	METER ON LATLONG	METER OFF LAT LONG	METER ON TIMESTAMP	METER OFF TIMESTAMP	METER ON DURATION TIME
FWT1010	8.984	Y131	Sat Apr 04 15:59:16 CDT 2015	WILLIAM	817848xxxx	1600	HOSPITAL PKY	111	CRYSTAL SPRINGS ST	817 848 xxxx ASK FOR MONIQUEP/UA@ TEXAS HELATH HARRIS HEB	32.895532, -97.123885	32.852079, -97.131672	Sat Apr 04 16:36:03 CDT 2015	Sat Apr 04 16:46:32 CDT 2015	10:29
FWT1010	58.911	5560	Sat Apr 11 16:40:24 CDT 2015	JASMINE	817848xxxx	2717	TIBBETS DR	111	HEMPHILL ST	817 848 xxxx CALL APPROVED BY:RON ONE WAY NO STOPS	32.834141, -97.122231	32.8258, -97.108096		Sat Apr 11 17:10:43 CDT 2015	0:00
FWT1010	9.005	Y760	Wed Apr 08 16:46:02 CDT 2015	CARA	817848xxxx	2717	TIBBETS DR	1222	S JENNINGS AVE	817 848 xxxx COA SPRINGWOOD HOSPITAL IN FRONT AUTH VY DENISE	32.834276, -97.122231	32.735662, -97.329829	Wed Apr 08 17:02:45 CDT 2015	Wed Apr 08 17:41:54 CDT 2015	39:09:00
FWT1010	86.969	E984	Mon Apr 13 16:31:00 CDT 2015	CHRISTINA	817848xxxx	2717	TIBBETS DR	333	CYPRESS ST	CALL 817 848 xxxx SPRINGWOOD HOSP ER BACK DOOR VOUCH OK BY: RON	32.833469, -97.122764	32.744586, -97.313454	Mon Apr 13 16:52:42 CDT 2015	Mon Apr 13 17:18:44 CDT 2015	26:02:00

In the previous sections we have discussed the various ways that customers without technology can utilize the services: Using a landline to call our dispatch to book a trip, having someone use the Concierge application, or if they have access to a desktop computer, booking their trip through the internet.

Similarly above we have discussed in length how our drivers are fully vetted prior to driving one of Irving Holdings' vehicles which assures that the drivers have not only had a national background check and their driving records reviewed.

As seen in the references in Tab 3 – References, Irving Holdings has extensive experience working within federal regulations on public transportation funding as well as providing the services needed that fit within the government transportation regulations.

Some of the marketing communication tools that may be used are mobile marketing campaigns advertising, sales promotions, public relations, and direct marketing that both Irving Holdings and DCTA would collaborate on jointly at no cost to DCTA

DCTA and Irving Holdings would work together to create a mobile marketing campaign using multiple channels, while keeping the message consistent throughout. The easiest channel to start with is short message service (SMS)—basically, texting customers. SMS—and its souped-up companion, multimedia message service (MMS)—is an opt-in service, so we already know their marketing messages are viewed by a receptive audience.

Irving Holdings as adequate financial resources to perform this contract as evidenced by the other contracts that have been awarded to Irving Holdings that we are currently providing service to other transit agencies and the public sector. All the references in Tab 3 have been renewed for multiple extensions on the contracts showing that we have the ability to comply with the proposed delivery and performance schedule. All the references will show a more than a satisfactory performance record. We have the necessary organization, experience, account and operational controls and technical skills with

the ability to obtain others as needed. Irving Holdings has a line of credit with BBVA Compass as well to draw on if needed.

Tab 3 – References

Below are references which are with many large transit agencies or cities to provide on-demand transportation services within the past three years.

- DART Paratransit Services, MV Transportation Prime, IHI Subcontractor
- DART - Collin County Rides, Mobility Impaired and Senior Program
- City of Arlington, Handitran
- City of Plano, Senior Rides
- Fort Worth Transportation Authority (The-T), Mobility Impaired Transportation Services (MITS)
- DART Emergency Ride Home Program
- DCTA, Taxi Services
- City of Richland Hills, Mobility Impaired and Senior Program
- NCTCOG CCARTs Replacement New Freedom for Mobility Impaired and Seniors (evolved into the DART – Collin County Rides)

All of these are current programs that we operate today with the exception of NCTCOG which the contract was fully performed and reached the end of term in 2014 and the City of Richland Hills that the contract ended April 30, 2017. No transportation services have ever been terminated for any other reason.

DART Paratransit Program – subcontractor to MV Transportation
8998 Senate Street, Dallas, TX 75228
Contact: Keith Anglin, General Manager
Phone: 972-951-5355
E-mail: keith.anglin@mvtransit.com

Scope of the project: DART Paratransit Service is an origin to destination, curb-to-curb, public transportation service for people with disabilities who are unable to use DART fixed route buses or trains. Paratransit is a shared-ride service operated with modern, accessible vehicles, and taxi cabs. Riders who are unable to access vans by using steps can use the wheelchair lifts or ramps.
Dates of service: October 2012 to current.
Size of project: Currently providing approximately 2,000 trips per day

DART – Collin County Rides, Mobility Impaired and Senior Program
PO Box 660163, Dallas, TX 75266-7248
Contact: Robert B Parks, AICP
Phone: 214-749-2899
E-mail: robparks@dart.org

Scope of the project: Collin County Rides serves seniors citizens that are 60+ and/or persons with disabilities. Collin County Rides services the municipalities of Wylie, Allen and the Town of Fairview. The residents may travel anywhere within these three cities and/or Collin County as long as either the origin or destination of the trip is within one of the three cities.
Dates of service: October 2016 to current.
Size of project: Currently providing over 350 trips per month

City of Arlington, Handitran Program
1101 W Main Street, Arlington, TX 76012
Contact: Alex Radke, Transit Operations Supervisor
Phone: 817-459-6391
E-mail: alex.radke@arlingtontx.gov

Scope of the project: Handitran is a special transportation service for senior citizens and citizens with disabilities. Handitran offers door-to-door, shared ride, prearranged service and operates mini-buses equipped with wheelchair lifts. Irving Holdings vehicles are also used to supplement the buses. Service is provided anywhere within the city limits of Arlington and Pantego and Trinity Railway Express stations at Bell Spur and CentrePort. Work, non-public school, medical, essential personal and recreational trips are allowed. There is no restriction on the trip purpose other than that public school trips are not allowed.
Dates of service: 2007 to current through multiple RFP awards
Size of project: Currently providing over 250 trips per day.

City of Plano Senior Rides
5901 Los Rios Blvd, Plano, TX 75074
Contact: Colette Hall
Phone: 972-941-7261
E-mail: coletteh@plano.gov

Scope of the project: The Senior Rides program is a collaborative program between the Wellness Center for Older Adults, The City of Plano and DART. The program is designed for seniors aged 65 and over who have no other means of transportation. The program allows eligible seniors the ability to purchase taxi vouchers at 25% of the cost.
Dates of service: March 2011 to current through multiple RFP awards
Size of project: Currently providing nearly 300 trips per month

City of Richland Hills, Mobility Impaired and Senior Program
3200 Diana Drive, Richland Hills, TX 76118
Contact: Eric Strong, City Manager
Phone: 817-616-3806
E-mail: estrong@richlandhills.com

Scope of the project: City of Richland Hills Mobility Impaired and Senior Program serves seniors citizens that are 60+ and/or persons with disabilities and services the City of Richland Hills. The residents may travel anywhere within the city and into the City of Fort Worth.
Dates of service: November 2016 to April 30, 2017 (end of contract)
Size of project: Currently providing nearly 200 trips per month

Fort Worth Transportation Authority (The-T) MITS program
1600 East Lancaster Avenue, Fort Worth, TX 76102
Contact: Adrianne Cook, AVP Special Services
Phone: 817-215-8985
E-mail: adrianne.cook@fwta.org

Scope of the project: The Fort Worth Transit Authority, ("The T's") Mobility Impaired Transportation Service offers door-to-door transportation within the service areas of Fort Worth and Blue Mound.

Trained drivers are available to assist passengers in boarding and alighting vehicles specially designed to accommodate the mobility impaired.
Dates of service: 2001 to current with multiple RFP awards.
Size of project: Currently providing 250 trips per day

DART – Emergency Ride Home Program
1600 Pacific, Dallas, TX 75202
Contact: Dena Mercer, Account Executive
Phone: 214-749-2985
E-mail: dmercer@dart.org

Scope of the project: This service is provided for vanpoolers who have personal or work-related emergencies. Riders are given a ride home via taxi or a rental car, available two times each quarter. The cost of the Emergency Ride Home co-pay is $10.
Dates of service: 2005 to current, not concurrent periods.
Size of project: Currently providing 15 trips per month

Denton County Transportation Authority (DCTA) – Taxi Service Provider
1955 Lakeway Drive Suite 260
Contact: Michelle Bloomer
Phone: 972-966-5115
Email: mbloomer@dcta.net

Scope of the project: Provide for curb-to-curb demand response service through a qualified taxi service provider to supplement DCTA operated services. Passengers that qualify for these services will reside within Denton and Collin counties. The majority of trips provided will be within these two (2) counties, plus a limited area of Plano within Dallas County.
Dates of service: Begins March 2017 to current.
Size of project: TBD

North Central Texas Council of Governments --CCARTs Replacement New Freedom
616 Six Flags Drive, Arlington, TX 76011
Contact: Jamie Patel, AICP
Phone: 817-608-2377
Email: jpatel@nctcog.org

Scope of the project: North Central Texas Council of Governments (NCTCOG) CCARTs Replacement New Freedom program served seniors citizens that are 60+ and/or persons with disabilities. CCART's replacement served all of Collin County excluding the city of Plano.
Dates of service: July 2013 – November 2014
Size of project: Provided approximately 950 trips per month

Tab 4 – Pricing

As discussed earlier in this response, the customer has a variety of ways to pay for the transportation.

- If they want to pay by debit card, credit card, PayPal, they can use the App, use the internet, or swipe the card themselves using the backseat credit cards machine of the vehicle
- If they want to pay by cash, they can hand the driver cash at the end of their transportation (for the unbanked)
- If they have a subsidy or a discount and are only to pay a portion of the fare, the passenger will be issued a prepaid debit card (that can only be used in our vehicles) that will be swiped inside the vehicle, and then the driver will fill out a voucher for the portion responsible by DCTA to be billed weekly.
- If DCTA wants issue the "prepaid" debit cards that are preloaded with a fixed amount of money, then DCTA could then provide these to their customers based on the subsidy amount. For example, DCTA would purchase a prepaid card for $100, if the subsidy is 25%, the customer would then purchase the card from DCTA for $25. The entire fare would then be charged on the prepaid card. This is also a feature for the unbanked.

Pricing for Transportation Voucher program:

Trips will be billed at $1.80 per mile with $2.25 drop fee for ambulatory~~/$6.25 drop fee for non-ambulatory~~ with any additional passenger at $2 per passenger with a $10 minimum fare for ambulatory/$14 minimum fare for non-ambulatory. Replacement cards are $3 each. At the end of each month a 15% administrative overhead fee based on the total fares for the transportation provided during the month will be billed.

Pricing for Supplemental Services:

If a route is created for a driver and there are greater than or equal to 16 trips per day the price will be $15 for ambulatory and $18 for non-ambulatory.

If a route is not created or a route is created with has less than 16 trips per day per driver, the price will be $1.80 per mile with $2.25 drop fee for ambulatory~~/$6.25 drop fee for non-ambulatory~~ with any additional passenger at $2 per passenger with a $10 minimum fare ambulatory/$14 minimum fare non-ambulatory.

Pricing for Real-time Demand Responsive Service

Trips will be billed at $1.80 per mile with $2.25 drop fee for ambulatory~~/$6.25 drop fee for non-ambulatory~~ with any additional passenger at $2 per passenger with a $10 minimum fare for ambulatory/$14 minimum fare for non-ambulatory. Replacement cards are $3 each. At the end of each month a 15% administrative overhead fee based on the total fares for the transportation provided during the month will be billed.

Pricing for Innovative Transit Solutions

As this is developed, the task order will identify the agreed upon pricing between DCTA and IHI when the service is identified.

Tab 5 – Appendix/Attachments

A. Certification and Restrictions on Lobbying
B. Government Wide Debarment and Suspension
C. Conflict of Interest Questionnaire
D. Bidder's Questionnaire
E. Affidavit of Non-collusion
F. Addendum #1
G. Addendum #2

SOLICITATION OVERVIEW AND ENDORSEMENT

SOLICITATION No./TYPE	17-27 / REQUEST FOR PROPOSALS
TITLE	On-Call Taxi and Non-Emergency Transportation Services
PROCUREMENT SCHEDULE	Dates and times are subject to change, any changes will be issued by addenda.
PRE BID/PROPOSAL MEETING DATE	N/A
PRE BID/PROPOSAL MEETING LOCATION	N/A
QUESTIONS DUE	July 6th, 2017 by 5:00 PM
RESPONSES TO QUESTIONS RELEASED	July 13th, 2017 by 5:00 PM
DUE DATE/TIME	**July 20th, 2017 at 3:00 PM**
QUESTIONS/ CLARIFICATIONS	All requests for clarifications and questions shall be submitted in writing. No verbal questions will be accepted and no verbal replies will be provided. Bidders/Proposers must submit requests for changes to or approval of equals, clarifications and modifications of the specifications in writing. The solicitation documents can only be modified in writing. Procurement must receive the requests no later than the date indicated above. Procurement will issue a response to those requests to all bidders/proposers by posting the replies to BidSync no later than the date indicated above. DCTA assumes no responsibility for delayed or lost responses
ALL QUESTIONS AND REQUESTS FOR CLARIFICATIONS SHALL BE SENT TO	**Jeremy Lewallen** **procurement@dcta.net** **or submitted via BidSync at www.bidsync.com**
RECEIPT OF BID/PROPOSAL	**Prior to the time and date indicated above, all bid/proposal packages shall be hand delivered or mailed to Procurement at:** **DCTA** 1955 Lakeway Drive, Suite 260 ATTN: Jeremy Lewallen SOLICITATION #: 17-27 Lewisville, Texas 75057 **Bid/Proposal packages received after the due time and date shall not be considered and will be returned unopened.** All bids/proposals shall be submitted in a sealed package with the company name and RFB/RFP number clearly marked on the outside. The clock in the reception area of DCTA is the official time for receipt of bids. Bids/Proposals submitted to other DCTA locations may be returned unopened and will not be considered in the award of the contract. DCTA reserves the right to change the deadline for submitting bids/proposals. Further, DCTA reserves the right to unilaterally revise or amend the scope of services up to the time set for submitting bids/proposals. Such revisions and addenda, if any, shall be announced by addenda to this solicitation. Copies of such addenda shall be furnished to all prospective bidders/proposers.
ACCEPTANCE PERIOD	**BIDS/PROPOSALS SHALL REMAIN VALID FOR 60 DAYS FROM THE DUE DATE**
DBE (DISADVANTAGED BUSINESS ENTERPRISE) PROGRAM	It is the policy of DCTA to create a level playing field on which DBEs, as defined in 49 CFR Part 26, can compete fairly for DOT-assisted contracts. Additionally, DCTA is committed to removing barriers to the participation of DBEs on DOT-assisted contracts. The DBE requirements of 49 CFR Part 26 applies to this procurement. By submitting its bid/proposal, Bidder/Proposer certifies that it will take all necessary and reasonable steps in accordance with 49 CFR Part 26 to ensure that DBEs are given the maximum opportunity to compete for and participate in the performance of this contract. Bidder/Proposer further certifies and agrees that it has not and will not discriminate on the basis of race, color, national origin, or sex in the award of subcontracts under this contract or in performance of this contract. DCTA's DBE Program is available at www.dcta.net
DBE GOAL	☐yes ☒no **DBE goal N/A**
DAVIS-BACON AND COPELAND ANTI-KICKBACK	The Davis-Bacon and Copeland Acts are codified at 40 USC 3141, et seq. and 18 USC 874. The Acts apply to grantee construction contracts and subcontracts that "at least partly are financed by a loan or grant from the Federal Government." 40 USC 3145(a), 29 CFR 5.2(h), 49 CFR 18.36(i) (5).The Acts apply to any construction contract over $2,000. 40 USC 3142(a), 29 CFR 5.5(a). 'Construction,' for purposes of the Acts, includes "actual construction, alteration and/or repair, including painting and decorating of public buildings and public works of the Government." 29 CFR 5.5(a).
CERTIFIED PAYROLL	☐yes ☒no **Wage Rate N/A**

BID/PROPOSAL ENDORSEMENT

TO BE COMPLETED FOR HAND DELIVERED AND MAILED RESPONSES ONLY

BUSINESS NAME	Irving Holdings, Inc		
CONTACT NAME	Jack Bewley	TITLE	President
TELEPHONE	817-534-7777	EMAIL	jack.bewley@irvingholdings.ent
ADDRESS	2515 Irving Blvd, Dallas, TX 75207-5911		
SIGNATURE	Jack Bewley	**DATE**	7/28/17

Attachment A

Certification and Restrictions on Lobbying

CERTIFICATION AND RESTRICTIONS ON LOBBYING

I, Jack Bewley, President, hereby certify
(Name and title of official)

On behalf of Irving Holdings, Inc that:
(Name of Bidder/Company Name)

- No federal appropriated funds have been paid or will be paid, by or on behalf of the undersigned, to any person for influencing or attempting to influence an officer or employee of any agency, a Member of Congress, and officer or employee of Congress, or an employee of a Member of Congress in connection with the awarding of any federal contract, the making of any federal grant, the making of any federal loan, the entering into of any cooperative agreement, and the extension, continuation, renewal, amendment, or modification of any federal contract, grant, loan, or cooperative agreement.

- If any funds other than federal appropriated funds have been paid or will be paid to any person influencing or attempting to influence an officer or employee of any agency, a Member of Congress, and officer or employee of Congress, or an employee of a Member of Congress in connection with the federal contract, grant, loan, or cooperative agreement, the undersigned shall complete and submit Standard Form – LLL, "Disclosure Form to Report Lobbying," in accordance with its instructions.

- The undersigned shall require that the language of this certification be included in the award documents for all sub-awards at all tiers (including sub-contracts, sub-grants and contracts under grants, loans, and cooperative agreements) and that all sub-recipients shall certify and disclose accordingly.

This certification is a material representation of fact upon which reliance was placed when this transaction was made or entered into. Submission of this certification is a prerequisite for making or entering into this transaction imposed by 31 U.S.C. § 1352 (as amended by the Lobbying Disclosure Act of 1995). Any person who fails to file the required certification shall be subject to a civil penalty of not less than $10,000 and not more than $100,000 for each such failure.

The undersigned certifies or affirms the truthfulness and accuracy of the contents of the statements submitted on or with this certification and understands that the provisions of 31 U.S.C. Section 3801, et seq., are applicable thereto.

Name of Bidder/Company Name Irving Holdings, Inc

Type or print name Jack Bewley

Signature of authorized representative Jack Bewley Date 7/28/17

Signature of notary and SEAL

LIZ GEORGE
MY COMMISSION EXPIRES
JULY 5, 2020
NOTARY ID: 12025266

Attachment B

Government Wide Debarment and Suspension

GOVERNMENT-WIDE DEBARMENT AND SUSPENSION (NONPROCUREMENT)

Instructions for Certification: By signing and submitting this bid or proposal, the prospective lower tier participant is providing the signed certification set out below.

(1) It will comply and facilitate compliance with U.S. DOT regulations, "Nonprocurement Suspension and Debarment," 2 CFR part 1200, which adopts and supplements the U.S. Office of Management and Budget (U.S. OMB) "Guidelines to Agencies on Governmentwide Debarment and Suspension (Nonprocurement)," 2 CFR part 180,

(2) To the best of its knowledge and belief, that its Principals and Subrecipients at the first tier:

a. Are eligible to participate in covered transactions of any Federal department or agency and are not presently:

(1) Debarred,
(2) Suspended,
(3) Proposed for debarment,
(4) Declared ineligible,
(5) Voluntarily excluded, or
(6) Disqualified,

b. Its management has not within a three-year period preceding its latest application or proposal been convicted of or had a civil judgment rendered against any of them for:

(1) Commission of fraud or a criminal offense in connection with obtaining, attempting to obtain, or performing a public (Federal, State, or local) transaction, or contract under a public transaction,
(2) Violation of any Federal or State antitrust statute, or
(3) Commission of embezzlement, theft, forgery, bribery, falsification or destruction of records, making any false statement, or receiving stolen property,

c. It is not presently indicted for, or otherwise criminally or civilly charged by a governmental entity (Federal, State, or local) with commission of any of the offenses listed in the preceding subsection 2.b of this Certification,

d. It has not had one or more public transactions (Federal, State, or local) terminated for cause or default within a three-year period preceding this Certification,

e. If, at a later time, it receives any information that contradicts the statements of subsections 2.a - 2.d above, it will promptly provide that information to FTA,

GOVERNMENT-WIDE DEBARMENT AND SUSPENSION
(NONPROCUREMENT)

f. It will treat each lower tier contract or lower tier subcontract under its Project as a covered lower tier contract for purposes of 2 CFR part 1200 and 2 CFR part 180 if it:

(1) Equals or exceeds $25,000,
(2) Is for audit services, or
(3) Requires the consent of a Federal official, and

g. It will require that each covered lower tier contractor and subcontractor:
(1) Comply and facilitate compliance with the Federal requirements of 2 CFR parts 180 and 1200, and
(2) Assure that each lower tier participant in its Project is not presently declared by any Federal department or agency to be:

a. Debarred from participation in its federally funded Project,
b. Suspended from participation in its federally funded Project,
c. Proposed for debarment from participation in its federally funded Project,
d. Declared ineligible to participate in its federally funded Project,
e. Voluntarily excluded from participation in its federally funded Project, or
f. Disqualified from participation in its federally funded Project, and

3. It will provide a written explanation as indicated on a page attached in FTA's TEAM-Web or the Signature Page if it or any of its principals, including any of its first tier Subrecipients or its Third Party Participants at a lower tier, is unable to certify compliance with the preceding statements in this Certification Group.

Certification

Contractor Irving Holdings, Inc

Signature of Authorized Official _____ Date 7/28/17

Name and Title of Contractor's Authorized Official Jack Bewley, President

Attachment C

Conflict of Interest Questionnaire

CONFLICT OF INTEREST QUESTIONNAIRE

FORM CIQ

For vendor or other person doing business with local governmental entity

This questionnaire reflects changes made to the law by H.B. 1491, 80th Leg., Regular Session.

This questionnaire is being filed in accordance with Chapter 176, Local Government Code by a person who has a business relationship as defined by Section 176.001(1-a) with a local governmental entity and the person meets requirements under Section 176.006(a).

By law this questionnaire must be filed with the records administrator of the local governmental entity not later than the 7th business day after the date the person becomes aware of facts that require the statement to be filed. *See* Section 176.006, Local Government Code.

A person commits an offense if the person knowingly violates Section 176.006, Local Government Code. An offense under this section is a Class C misdemeanor.

OFFICE USE ONLY

Date Received

1 **Name of person who has a business relationship with local governmental entity.**

NOT APPLICABLE

2 ☐ **Check this box if you are filing an update to a previously filed questionnaire.**

(The law requires that you file an updated completed questionnaire with the appropriate filing authority not later than the 7th business day after the date the originally filed questionnaire becomes incomplete or inaccurate.)

3 **Name of local government officer with whom filer has employment or business relationship.**

NOT APPLICABLE

Name of Officer

This section (item 3 including subparts A, B, C & D) must be completed for each officer with whom the filer has an employment or other business relationship as defined by Section 176.001(1-a), Local Government Code. Attach additional pages to this Form CIQ as necessary.

A. Is the local government officer named in this section receiving or likely to receive taxable income, other than investment income, from the filer of the questionnaire?

☐ Yes ☐ No NOT APPLICABLE

B. Is the filer of the questionnaire receiving or likely to receive taxable income, other than investment income, from or at the direction of the local government officer named in this section AND the taxable income is not received from the local governmental entity?

☐ Yes ☐ No NOT APPLICABLE

C. Is the filer of this questionnaire employed by a corporation or other business entity with respect to which the local government officer serves as an officer or director, or holds an ownership of 10 percent or more?

☐ Yes ☐ No NOT APPLICABLE

D. Describe each employment or business relationship with the local government officer named in this section.

Signature of person doing business with the governmental entity

7/28/17

Date

Adopted 06/29/2007

Attachment D

Bidder's Questionnaire

DCTA BIDDER'S QUESTIONNAIRE

1. Name of Contractor ("Business", herein)
Irving Holding, Inc

2. Doing Business As (other business name if applicable)

3. Federal Tax ID Number
75-2876032

4. Business Mailing Address (include City/State/Zip Code)
2515 Irving Blvd, Dallas, TX 75207-5911

5. Business Email Address
jack.bewley@irvingholdings.net

6. Business Telephone: 817-534-7777 | Business Fax Number: 817-535-7450

7. Business Type
☐Individual ☐Partnership ☑Corporation ☐Joint Venture

8. Number of Years in Business
17 years

9. Annual Gross Revenue for the past three years (M = Millions)
☐$1M or Less ☐$1M-$5M ☐$5M-$10M ☐$10M-$16M ☑$16M+

10. Number of Employees
☑100 or Less ☐101-500 ☐501-750 ☐751-1,000 ☐1,001+

11. Is Business a DBE Firm?
☐Yes ☑No

12. Is Business Owned by Minority Ethnicity?
☐Yes ☑No

13. Ethnic Group
☐Black American ☐Asian Pacific American ☐Other
☐Hispanic American ☐Subcontinent Asian American
☐Native American ☑White/Caucasian

14. Woman Owned?
☐Yes ☑No

15. Veteran Owned
☐Yes ☑No

16. Type of Work Performed
☐Construction ☐Wholesale/Distributor
☐Manufacturing ☑Professional Service
☐Retail ☐General/Technical Service

17. Has the Business, or any officer or partner thereof, failed to complete a contract?
☐Yes ☑No

18. Is any litigation pending against the Business?
☑Yes ☐No

19. Has the Business ever been declared "Not Responsible"
☐Yes ☑No

20. Has the Business been debarred, suspended, proposed for debarment, and declared ineligible, voluntarily excluded or otherwise disqualified from bidding, proposing or contracting?
☐Yes ☑No

21. Has the Business ever been a defaulter, as principal, surety or otherwise?
☐Yes ☑No

22. Has the government or other public entity requested or required forcement of any of its rights under a surety agreement on the basis default or in lieu of declaring the Business in default?
☐Yes ☑No

23. Is the Business in arrears upon a contract or debt?
☐Yes ☑No

24. Are there any proceedings pending relating to the Business' responsibility, debarment, suspension, voluntary exclusion or qualification to receive a public contract?
☐Yes ☑No

25. Have liquidated damages or penalty provisions been assessed against the Business for failure to complete the work on time or for any other reason?
☐Yes ☑No

26. If a "yes" response is given to questions 17-25, please provide a detailed explanation including dates, references to contract information, contacts, etc. (attach additional pages as necessary). DCTA reserves the right to inquire further with respect thereto.
The litigation is in regards to vehicle accidents

27. List the name and business address of each person or each entity which has a 10% or more ownership or control interest in the Business (attach additional pages as necessary).
NTOF, 4455 LBJ Freeway #300, Dallas, TX 75244

I, individually and on behalf of the business named above, do by my signature below certify that the information provided in this questionnaire is true and correct. I understand that if the information provided herein contains any false statements or any misrepresentations: 1) DCTA will have the grounds to terminate any or all contracts which DCTA has or may have with the business; 2) DCTA may disqualify the business named above from consideration for contracts and/or 3) DCTA may have grounds for initiating legal action under federal, state or local law. ***Note: This questionnaire is also a certification form; the information requested will be used to determine small business status as per 13 CFR Part 121. Additionally, this information will allow DCTA to report the amount of subcontracting activity for DCTA.***

Printed Name: Jack Bewley

Title: President

Signature of Owner: Jack Bewley

Date: 7/28/17

Email Address: jack.bewley@irvingholdings.ent

(Owner, CEO, President, Majority Stockholder or Designated Representative)
Questions about this document should be directed to the Procurement Manager

Attachment E

Affidavit of Non-Collusion

AFFIDAVIT OF NON-COLLUSION

Affidavit of Non-Collusion

I hereby swear (or affirm) under the penalty for perjury:

1. That I am the proposer (if the proposer is an individual), a partner in the proposal (if the proposer is a partnership), or an officer or employee of the proposing corporation having authority to sign on its behalf (if the proposer is a corporation);

2. That the attached proposal(s) has been arrived at by the proposer independently and have been submitted without collusion and without any agreement, understanding, or planned common course of action with any other Proposer or materials, supplies, equipment, or service described in the invitation to proposal, designed to limit independent proposals or competition;

3. That the contents of the proposal or proposals has not been communicated by the proposer or its employees or agents to any person not an employee or agent of the proposer or its surety on any bond furnished with the proposal or proposals, and will not be communicated to any such person prior to the official opening of the proposal or proposals; and

4. That I have fully informed myself regarding the accuracy of the statements made in the affidavit:

Signed _____

Firm Name Irving Holdings, Inc

Subscribed and sworn to before me this 27 day of July, 20 20

Notary Public _____

LIZ GEORGE
MY COMMISSION EXPIRES
JULY 5, 2020
NOTARY ID: 12025266

My Commission expires July 5, 20 20

Proposer's E.I. Number 75-2876032 (number used on Employer's Quarterly Federal Tax Return)

DCTA
Your Future Is Riding On Us.

Denton County Transportation Authority

July 13, 2017

ADDENDUM NO. 1

RFP 17-27 On-Call Taxi and Non-Emergency Transportation Services

Addendum must be acknowledged below and returned with the submittal.

Change 1
Ref: SCOPE OF WORK, TERMS AND CONDITIONS
Section 7.2.4

Original text

Utilize a prequalified list of passengers provided by agency or its partners to provide specific transportation services under agency determined parameters, and train drivers accordingly to qualify passengers and process any fare subsidies.

Change to

Utilize a prequalified list of passengers provided by agency or its partners to provide specific transportation services under agency determined parameters, and train drivers accordingly to process any fare subsidies.

Jeremy Lewallen
Procurement Coordinator

Acknowledged by: _____ Date: 7/28/17
Firm/Representative

DCTA
Your Future Is Riding On Us.

Denton County Transportation Authority

July 18, 2017

ADDENDUM NO. 2

RFP 17-27 On-Call Taxi and Non-Emergency Transportation Services

Addendum must be acknowledged below and returned with the submittal.

Change 1

The due date/time for proposals has changed. The new date/time is Friday, July 28th at 3:00PM.

Change 2

Ref: Federal Clauses

Original text

Drug and Alcohol Abuse and Testing
Operational service contracts except micro-purchases ($3,500 or less, except for construction contracts over $2,000)

The Contractor agrees to comply with the following Federal substance abuse regulations: a. Drug-Free Workplace. U.S. DOT regulations, "Drug-Free Workplace Requirements (Grants), " 49 C.F.R. Part 32, that implements the Drug-Free Workplace Act of 1988 as amended, 41 U.S.C. §§ 8103 et seq., and 2 CFR part 182, b. Alcohol Misuse and Prohibited Drug Use. FTA Regulations, "Prevention of Alcohol Misuse and Prohibited Drug Use in Transit Operations," 49 USC 5331, as amended by Map-21, 49 CFR part 40, 49 USC chapter 53, 49 CFR Part 655, to the extent applicable.

Change to

Drug and Alcohol Abuse and Testing
Operational service contracts except micro-purchases ($3,500 or less, except for construction contracts over $2,000)

The Contractor agrees to comply with the following Federal substance abuse regulations: Alcohol Misuse and Prohibited Drug Use. FTA Regulations, "Prevention of Alcohol Misuse and Prohibited Drug Use in Transit Operations," 49 USC 5331, as amended by Map-21, 49 CFR part 40, 49 USC chapter 53, 49 CFR Part 655, to the extent applicable.

Jeremy Lewallen
Procurement Coordinator

Acknowledged by: _____ Date: 7/28/17
Firm/Representative

Align top of FedEx PowerShip Label or ASTRA Label here.

Align bottom of Peel and Stick Airbill or Airbill Pouch here.

Proposal for

On-Call Taxi and Non-Emergency Transportation Services 17-27

RECEIVED
JUL 28 2017
BY: L Blakley
8:02 am

Presented to:

Denton County Transportation Authority (DCTA)
Attention: Jeremy Lewallen
1955 Lakeway Drive Suite 260
Lewisville, TX 75057

Due: July 28th, 2017 at 3:00 pm

Submitted by:

IRVING HOLDINGS
Irving Holdings, Inc.
2515 Irving Blvd, Dallas, Texas 75207
Contact: Jack D. Bewley President
(817) 534-7777 Fax (817) 535-7450

Denton County Transportation Authority

Task Order

Task Number:	1	Project ID:	Grant #
Contractor:	Irving Holdings		

PROJECT INFORMATION

Name:	Collin County Transit Overview	
DCTA Account Code: (Contract to be Billed Under)		Approved Budget Yes☒ No☐
Project Lead	Michelle Bloomer	

DESCRIPTION

(Include Scope, Cost, and Deliverables with Schedule)

"Taxi Voucher" program for Elderly, Disabled, and other qualifying residents that reside in member cities of the McKinney Urban Transit District (MUTD) with transit services being provided throughout Collin County, Texas (the Service Area).

The initial term of this Task Order shall begin on October 1, 2017, and continue for a period of one year, unless sooner terminated or extended as provided herein (the "Initial Term").

SIGNATURES/APPROVALS

Contractor:	See scope of services for signatures	Date	
COO:	See scope of services for signatures	Date	
James C. Cline, Jr. DCTA President	See scope of services for signatures	Date	

DENTON COUNTY TRANSPORTATION AUTHORITY

Collin County Transit Overview | October 1, 2017

Task Order #1

Scope of Services for Transit Services

1. Overall Intent

1.1 The intent of this Task Order is for Irving Holdings, Inc., to provide on behalf of DCTA, transit services through a "Taxi Voucher" program for Elderly, Disabled, and other qualifying residents who reside in the member cities of the McKinney Urban Transit District (MUTD) with transit services being provided throughout Collin County, Texas (the Service Area). Services provided by Irving Holdings shall include Taxi services for qualified customers with specific mobility devices as defined later in this task order.

1.2 DCTA will provide supporting service to facilitate the implementation of the program and on-going contract management and program compliance. This Scope of Services establishes a framework for service initiation and the ongoing program of services. Changes required to meet the needs of the program may be made by mutual written agreement of the DCTA Contracting Officer and an authorized representative of Irving Holding, Inc.

2. Term of Services

2.1 The initial term of this Task Order shall begin on October 1, 2017, and continue for a period of one year, unless sooner terminated or extended as provided herein (the "Initial Term").

3. Compliance with Americans with Disabilities Act and Other Laws

3.1 Irving Holdings shall comply with the requirements of the Americans with Disabilities Act, as amended, in providing the Transit Services. In addition, Irving Holdings acknowledges, and understands that it is responsible for compliance with, and agrees to comply with, all other federal, state and local laws, statutes, ordinances, regulations and policies, as they exist, may be amended or in the future arising, applicable to DCTA and the Transit Services provided under this Task Order. Irving Holdings shall ensure that its officers, employees, agents, contractors and other parties performing services for or on behalf of DCTA comply with all applicable laws, statutes, ordinances, regulations and policies.

4. Licensure

4.1 All vehicles providing Transit Services shall be operated by an operator duly licensed by the State of Texas and in current possession of said license to operate vehicles.

5. DCTA Responsibilities

Overall Program Management.

5.1 DCTA will be responsible for the overall management of the program with the City of McKinney and the successful delivery of the services and management of this Task Order scope of services.

Eligibility Certification.

5.2 DCTA will certify the eligibility of qualified residents based on the current policy established by the McKinney Urban Transit District and transmit this list of qualified residents to Irving Holdings. Certifications are currently conducted via mail, email, phone, or in person at DCTA offices. Additional on-site eligibility opportunities will be coordinated with City of McKinney staff.

Customer Service.

5.3 DCTA will provide customer service support to handle general program inquiries and passenger qualifications at 940.243.0077 and online at https://www.dcta.net/about-dcta/passenger-comment.

Support to City of McKinney and McKinney Urban Transit District.

5.4 DCTA will participate in reasonable meetings of the City of McKinney, the McKinney Urban Transit District, and regulatory agencies in order to ensure the success of the program.

6. Irving Holdings Responsibilities – Taxi Voucher Program Scope of Services

Support to DCTA and the City of McKinney and McKinney Urban Transit District.

6.1 Irving Holdings, upon request of DCTA shall participate as necessary, in reasonable meetings with DCTA and the City of McKinney, the McKinney Urban Transit District, and regulatory agencies in order to ensure the success of the program.

Compliance Reporting.

6.2 Irving Holdings shall support audit, TxDOT, FTA, and National Transit Database reporting and compliance requirements. Irving Holdings will provide reports on debit card loading/balances, trip reports, and additional information necessary to monitor service performance and meet federal, State and local reporting requirements.

Debit Card Issue/Reloading.

6.3 Irving Holdings will reload, replace lost cards (fee charged), and report all values loaded on the card. The initial guidance is to provide a 3:1 match (eligible passenger contributing $25 will receive $100 value on their debit card) with a maximum balance at any one time of $400 and a maximum loading of $400 in any given month. DCTA will work closely with City staff to monitor the allowable load rate to ensure budget limitations are sustained.

Trip Dispatch.

6.4 Irving Holdings will provide 24/7 dispatch operations, using a dedicated phone number for Collin County Transit.

Fleet and service expectations.

6.5 Irving Holdings will send clean and safe vehicles to the requested locations within promised time windows. This will include mobility device accessible vehicles, if requested.

Service Details.

6.6 Irving Holdings, DCTA's contractor, will operate service and will be responsible for call center operations, scheduling, dispatching, driver operations and management, vehicle maintenance, safety and licensing requirements, fare and data collection, as well as all reporting.

6.7 Irving holdings will provide Taxi Services in support of this Task Order Monday through Friday, 6 a.m. to 6 p.m. and Saturday, 8 a.m. to 6 p.m.

6.8 Taxi fares will be based on standard meter rates and origin/destination.

6.9 The service area shall include municipalities that are predominately located in Collin County, Texas.

6.10 Eligibility shall be determined by DCTA, and DCTA shall provide Irving Holdings with a list of eligible program participants on an agreed upon schedule by both DCTA and Irving Holdings.

6.11 Customers who qualify will receive an introductory packet from DCTA that will include their qualification approval letter detailed instructions on how to request and load their debit card with funds and instructions on how to schedule a trip.

Fleet Vehicles.

6.12 Irving Holdings shall ensure that safe, clean, accessible vehicles are available to deliver timely Taxi services sufficient to meet the demand and maintain on-time performance.

6.13 Taxi service will be provided to eligible customers, including those with wheeled devices measuring up to 30" wide / 55" high / 48" deep and weighing up to 600 pounds (total weight of device plus occupant).

6.14 If a customer's specific mobility needs are beyond that of what Irving Holdings can provide (based on the restrictions above), the individual will be certified for the demand response service to be directly provided by DCTA

Loading of the Debit Cards provided by Irving Holdings

6.15 The customer can call Irving Holdings at 682.334.8045 and load a maximum of $100 on their debit card (in $5 increments) – the customer contribution will be matched 3-to-1 for a total value of up to $400 maximum per month.

Rider Payment	Taxi Subsidy Received	Taxi Debit Card Value
$5	$15	$20
$10	$30	$40
$15	$45	$60
$20	$60	$80
$25	$75	$100
$30	$90	$120
$35	$105	$140
$40	$120	$160
$45	$135	$180
$50	$150	$200
$55	$165	$220
$60	$180	$240
$65	$195	$260
$70	$210	$280
$75	$225	$300
$80	$240	$320
$85	$255	$340
$90	$270	$360
$95	$285	$380
$100	$300	$400

6.16 Irving Holdings shall take debit card, credit card or a pre-paid Visa or Master Card gift card over the phone.

6.17 Irving Holdings shall also accept and process cash, check, or money orders via mail.

Reloading of Debit Cards

6.18 Customers may re-load their card each month, not to exceed the total value of up to $400 maximum per month.

6.19 Un-used funds will roll over to the next month, however, in this case the customer will only be able to reload their debit card for the difference of their rollover balance up to $400.

Multiple Re-Loads Per Month		
During Month 1, the customer loads $25 on their debit card, with a match of $75, for a total value of $100	Because the customer only loaded a total of $25 on their debit card in Month 1, they can re-load up to $75 on their debit card, with a match of $225, for a total value of $300	During Month 1, the customer loaded funds on their debit card twice, but the total amount (including match) did not exceed $100, with a match of $300 for a total value of $400 maximum total
Rollover Funding and a Re-Load		
During Month 1, the customer loads $100 on their debit card, with a match of $300, for a total value of $400	The customer only used $200 on their debit card during Month 1, so the remaining $200 will roll over to Month 2 on the debit card	During Month 2, the customer is only able to load a total of $50, with a match of $150, for an added value of $200

Booking a Trip.

Irving Holdings shall ensure the following process is used regarding the booking of trips:

6.20 Customers contact Irving Holdings at 972.728.6789. Trips can be booked 24 hours a day, seven (7) days a week, 365 days per year. Customers are encouraged to make trip requests at least two (2) hours in advance. Requests by passengers with special accessibility needs are encouraged to make trip requests by 5 p.m. on the day prior to requested service.

6.21 Irving Holdings shall make the best attempt to schedule service for customers who call with less than the suggested notice. The customer will schedule a trip by identifying the program account number, their individual account number; date, time, origin, and destination of the requested trip; and number of travel companions, and their special mobility needs, if any. Irving Holdings will provide an estimated trip cost upon request.

6.22 Irving Holdings will allow customers to schedule their return trip at the same time as the original trip, or to schedule the return trip after the fact if the exact return time is unknown.

6.23 Irving Holdings shall provide for Subscription service for customers who need to schedule a regularly-occurring trip(s) (e.g., same day/same time/weekly).

6.24 Irving Holdings will accept trip requests up to seven (7) days in advance.

Customer Takes a Trip

6.25 Irving Holdings will operate Collin County Transit service on a 0-to-20-minute window for scheduled pick-ups.

6.26 The vehicle is considered to be on time when it arrives within the assigned 20-minute ready-time window (e.g., 10 minutes before or 10 minutes after the requested/scheduled pick-up time.

6.27 Passengers are encouraged to be ready 10 minutes prior to the scheduled arrival time and are expected to board within the first five (5) minutes of the vehicle arriving.

6.28 Service shall be provided curb-to-curb.

6.29 It is expected that the customer must be able to get themselves and any required equipment into and out of the taxi.

6.30 Ensure service animals are permitted on vehicles for those customers requiring service animal assistance, in compliance with the Americans with Disabilities Act.

6.31 Irving Holdings will allow trip cancellations up to two (2) hours before the scheduled pick-up time.

6.32 Cancellations made with less than a two (2) hours' notice will be considered a No-Show.

6.33 A customer is given a No-Show when the vehicle arrives within the 20-minutes ready-time window and the rider fails to board the vehicle within five (5) minutes of the vehicle's arrival.

6.34 Irving Holdings shall track and report to DCTA the occurrence of customer cancellations and No-Shows, as customers may be penalized for excessive cancellations or No-Shows

6.35 Irving Holdings will make every effort to provide the trip as requested. However, trip requests may be denied due to capacity constraints or eligibility. Irving Holdings shall track and report trip denials to DCTA in an agreed upon format and timeline

Customer Payment

6.36 The one-way fare is based on the origin and destination requested by the customer; basic meter rates apply. $2.25 is the boarding fee plus $1.80 per mile. Traffic delay time/waiting-time charge of $.45 per every 1.5 minutes will apply. Irving Holdings agrees to waive the minimum trip charge for ambulatory and non-ambulatory trips provided under Collin County Transit (MCK2017).

6.37 Riders may be responsible for any toll charges the trip may require as part of the fare.

6.38 Fares are to be paid using the taxi debit card. Taxi drivers will accept cash and credit card for any additional payments.

6.39 Personal Care Attendants (PCA) and guests may accompany a customer, but must pay for service separately (cash or credit card). The customer cannot use their debit card to pay for accompanying PCAs or guests.

6.40 If the total fare is more than what is available on the debit card, it is the customer's responsibility to pay the difference (cash or credit card).

6.41 Taxi debit cards are not to be used for tipping.

Debit Card Balance

6.42 Irving Holdings shall provide for the following: allow customers to provide their email address to opt in to receive low balance alerts; low balance alerts are to be sent via email once a debit card balance has reached $20 or less; allow for customers to provide their email address or update their email address with Irving Holdings by calling 682.334.8045; Allow for customers to contact Irving Holdings at 682.334.8045 to obtain their balance and confirm receipt of payment.

6.43 Irving Holdings shall provide for the following: allow customers to provide their email address to opt in to receive low balance alerts; low balance alerts are to be sent via email once a debit card balance has reached $20 or less; allow for customers to provide their email address or update their email address with Irving Holdings by calling 682.334.8045; Allow for customers to contact Irving Holdings at 682.334.8045 to obtain their balance and confirm receipt of payment.

Lost, Stolen, or Damaged Debit Cards

6.44 Irving Holdings shall provide for the following: Customers to report a lost, stolen or damaged debit card to Irving Holdings at 682.334.8045.

6.45 Irving Holdings shall provide for the following: Customers to report a lost, stolen or damaged debit card to Irving Holdings at 682.334.8045.

6.46 Upon notification by the customer of a lost, stolen, or damaged card, Irving Holdings will immediately deactivate the lost, stolen, or damaged card.

6.47 Irving Holdings may charge the customer up to $1 dollar for each replacement card.

6.48 Irving Holdings will process all replacement card requests as expediently as possible, but not more than five business days from the date of the original request.

6.49 Any unused funds remaining on the lost, stolen, or damaged card will be transferred to the replacement card and mailed to the customer.

Customer Service

6.50 1.1. Customers will call Irving Holdings at 972.728.6789 for questions related to booking a trip, a trip already booked, or other service-related questions.

6.51 Customers will call Irving Holdings at 972.728.6789 for questions related to booking a trip, a trip already booked, or other service-related questions.

6.52 Irving Holdings shall ensure customer calls are answered in an expedient manner with minimal wait times and calls dropped.

6.53 The customer shall call DCTA Customer Service at 940.243.0077 with questions regarding how the program works, to determine eligibility for the program, and to provide feedback on the service provided.

6.54 DCTA Customer Service is available Monday through Friday from 5 a.m. to 7 p.m. and Saturdays from 8 a.m. to 4 p.m.

Invoicing and Payment

6.55 Weekly, Irving Holdings will invoice DCTA based on the matching funds loaded on to authorized customer's debit cards the previous week. Supporting documentation will be provided in a mutually agreeable format.

6.56 Weekly, Irving Holdings will invoice DCTA based on the matching funds loaded on to authorized customer's debit cards the previous week. Supporting documentation will be provided in a mutually agreeable format.

6.57 On a monthly basis, Irving Holdings will invoice DCTA for their 15% administrative fee based on the cost of the actual trips taken in the prior month. Supporting documentation will be provided in a mutually agreeable format.

Agreed:

Irving Holdings, Inc

Jackie D Bewley

Jackie D Bewley
President
Date: 12/4/17

Denton County Transit Authority

James C. Cline

James C. Cline, Jr.
Date: 4 December 2017

Denton County Transportation Authority
Task Order

Task Number:	2	Project ID:	Grant #
Contractor:	Irving Holdings		
PROJECT INFORMATION			
Name:	Collin County Transit: Taxi Voucher Program		
DCTA Account Code: (Contract to be Billed Under)	230-50810	Approved Budget Yes☒ No☐	
Project Lead	Michelle Bloomer		
Requested By			
Cost Estimate			
Not to Exceed Budget			

DESCRIPTION
(Include Scope, Cost, and Deliverables with Schedule)
"Taxi Voucher" program for elderly, disabled and other qualifying residents who reside in the member cities of the McKinney Urban Transit District (MUTD) with transit services being provided throughout Collin County, Texas (the service area). The initial term of this task order shall begin on October 1, 2018, and continue for a period of one year, unless sooner terminated or extended as provided herein (the "Initial Term").

SIGNATURES/APPROVALS			
Contractor:	Jackie O'Brady	Date	9/28/2018
Department Head:		Date	
Raymond Suarez DCTA President	For R. Suarez	Date	09/28/18

DENTON COUNTY TRANSPORTATION AUTHORITY

Collin County Transit Overview | October 1, 2018

Task Order #2

Scope of Services for Transit Services

1. Overall Intent

1.1 The intent of this Task Order is for Irving Holdings, Inc., to provide on behalf of DCTA, transit services through a "Taxi Voucher" program for Elderly, Disabled, and other qualifying residents who reside in the member cities of the McKinney Urban Transit District (MUTD) with transit services being provided throughout Collin County, Texas (the Service Area). Services provided by Irving Holdings shall include Taxi services for qualified customers, including customers with specific mobility devices as defined later in this task order.

1.2 DCTA will provide supporting service to facilitate the implementation of the program and on-going contract management and program compliance. This Scope of Services establishes a framework for the ongoing program of services. Changes required to meet the needs of the program may be made by mutual written agreement of the DCTA Contracting Officer and an authorized representative of Irving Holding, Inc.

2. Term of Services

2.1 The initial term of this Task Order shall begin October 1, 2018 and continue for a period of one year. After the initial term, this agreement shall automatically renew for successive one-year terms.

3. Compliance with Americans with Disabilities Act and Other Laws

3.1 Irving Holdings shall comply with the requirements of the Americans with Disabilities Act, as amended, in providing the Transit Services. In addition, Irving Holdings acknowledges, and understands that it is responsible for compliance with, and agrees to comply with, all other federal, state and local laws, statutes, ordinances, regulations and policies, as they exist, may be amended or in the future arising, applicable to DCTA and the Transit Services provided under this Task Order. Irving Holdings shall ensure that its officers, employees, agents, contractors and other parties performing services for or on behalf of DCTA comply with all applicable laws, statutes, ordinances, regulations and policies.

4. Licensure

4.1 All vehicles providing Transit Services shall be operated by an operator duly licensed by the State of Texas and in current possession of said license to operate vehicles.

5. DCTA Responsibilities

Overall Program Management.

5.1 DCTA will be responsible for the overall management of the program with the City of McKinney and the successful delivery of the services and management of this Task Order Scope of Services.

Eligibility Certification.

5.2 DCTA will certify the eligibility of qualified residents based on the current policy established by the McKinney Urban Transit District and transmit this list of qualified residents to Irving Holdings. Certifications are currently conducted via mail, email, phone, or in person at DCTA offices. Additional on-site eligibility opportunities will be coordinated with City of McKinney staff.

Customer Service.

5.3 DCTA will provide customer service support to handle general program inquiries and passenger qualifications at 940.243.0077 and online at https://www.dcta.net/about-dcta/passenger-comment.

Support to City of McKinney and McKinney Urban Transit District.

5.4 DCTA will participate in reasonable meetings of the City of McKinney, the McKinney Urban Transit District, and regulatory agencies to ensure the success of the program.

6. Irving Holdings Responsibilities – Taxi Voucher Program Scope of Services

Support to DCTA and the City of McKinney and McKinney Urban Transit District.

6.1 Irving Holdings, upon request of DCTA shall participate as necessary, in reasonable meetings with DCTA and the City of McKinney, the McKinney Urban Transit District, and regulatory agencies to ensure the success of the program.

Reporting.

6.2 Irving Holdings shall support audit, TxDOT, FTA, and National Transit Database reporting and compliance requirements.

6.3 Irving Holdings will provide reports on debit card loading/balances, trip reports, and additional information necessary to monitor service performance and meet federal, State and local reporting requirements.

6.4 Irving Holdings shall provide special reporting as requested by DCTA on an as needed basis.

6.5 All reports are due to DCTA by the fifth business day after month end.

Debit Card Issue/Reloading.

6.6 Irving Holdings will reload, replace lost cards (fee charged), and report all values loaded on the card. The initial guidance is to provide a 3:1 match (eligible passenger contributing $25 will receive $100 value on their debit card) with a maximum balance at any one time of $400 and a maximum loading of $400 in any given month. DCTA will work closely with City staff to monitor the allowable load rate to ensure budget limitations are sustained.

Trip Dispatch.

6.7 Irving Holdings will provide 24/7 dispatch operations using 972.728.6789, the dedicated phone number for Collin County Transit.

Fleet and service expectations.

6.8 Irving Holdings will send clean and safe vehicles to the requested locations within promised time windows. This will include mobility device accessible vehicles, if requested. See 6.15.

Service Details.

6.9 Irving Holdings, DCTA's contractor, will operate service and will be responsible for call center operations, scheduling, dispatching, driver operations and management, vehicle maintenance, safety and licensing requirements, fare and data collection, as well as all reporting.

6.10 Irving holdings will provide Taxi Services in support of this Task Order Monday through Friday, 6 a.m. to 6 p.m. and Saturday, 8 a.m. to 6 p.m. All requests received for first or last pick-up times during these service hours will be accepted. (Request for pickup at 6 a.m. or 6 p.m.)

6.11 Taxi fares will be based on standard meter rates and origin/destination.

6.12 The service area shall include municipalities that are predominately located in Collin County, Texas.

6.13 Eligibility shall be determined by DCTA, and DCTA shall provide Irving Holdings with a list of eligible program participants on an agreed upon schedule by both DCTA and Irving Holdings.

6.14 Customers who qualify will receive an introductory packet from DCTA that will include their qualification approval letter, detailed instructions on how to request and load their debit card with funds, and instructions on how to schedule a trip.

Fleet Vehicles.

6.15 Irving Holdings shall ensure that safe, clean, accessible vehicles are available to deliver timely Taxi services sufficient to meet the demand and maintain on-time performance.

6.16 Taxi service will be provided to eligible customers, including those with wheeled devices measuring up to 30" wide / 55" high / 48" deep and weighing up to 600 pounds (total weight of device plus occupant).

6.17 If a customer's specific mobility needs are beyond that of what Irving Holdings can provide (based on the restrictions above), the individual will be certified for the demand response service to be directly provided by DCTA

Loading of the Debit Cards provided by Irving Holdings

6.18 The customer can call Irving Holdings at 682.334.8045 and load a maximum of $100 on their debit card (in $5 increments) – the customer contribution will be matched 3-to-1 for a total value of up to $400 maximum per month.

Rider Payment	Taxi Subsidy Received	Taxi Debit Card Value
$5	$15	$20
$10	$30	$40
$15	$45	$60
$20	$60	$80
$25	$75	$100
$30	$90	$120
$35	$105	$140
$40	$120	$160
$45	$135	$180
$50	$150	$200
$55	$165	$220
$60	$180	$240
$65	$195	$260
$70	$210	$280
$75	$225	$300
$80	$240	$320
$85	$255	$340
$90	$270	$360
$95	$285	$380
$100	$300	$400

6.19 Irving Holdings shall take debit card, credit card or a pre-paid Visa or Master Card gift card over the phone.

6.20 Irving Holdings shall also accept and process cash, checks, or money orders via mail.

Reloading of Debit Cards

6.21 Customers may re-load their card each month, not to exceed the total value of up to $400 maximum per month.

6.22 Un-used funds will roll over to the next month, however, in this case the customer will only be able to reload their debit card for the difference of their rollover balance up to $400.

Multiple Re-Loads Per Month		
During Month 1, the customer loads $25 on their debit card, with a match of $75, for a total value of $100	Because the customer only loaded a total of $25 on their debit card in Month 1, they can re-load up to $75 on their debit card, with a match of $225, for a total value of $300	During Month 1, the customer loaded funds on their debit card twice, but the total amount did not exceed $100, with a match of $300 for a total value of $400 (maximum total)
Rollover Funding and a Re-Load		
During Month 1, the customer loads $100 on their debit card, with a match of $300, for a total value of $400	The customer only used $200 on their debit card during Month 1, so the remaining $200 will roll over to Month 2 on the debit card	During Month 2, the customer is only able to load a total of $50, with a match of $150, for an added value of $200

Booking a Trip.

Irving Holdings shall ensure the following process is used regarding the booking of trips:

6.23 Customers contact Irving Holdings at 972.728.6789. Trips can be booked 24 hours a day, seven (7) days a week, 365 days per year. Customers are encouraged to make trip requests at least two (2) hours in advance. Requests by passengers with special accessibility needs are encouraged to make trip requests by 5 p.m. on the day prior to requested service.

6.24 Irving Holdings shall make the best attempt to schedule service for customers who call with less than the suggested notice. The customer will schedule a trip by identifying the program account number, their individual account number; date, time, origin, and destination of the requested trip; and number of travel companions, and their special mobility needs, if any. Irving Holdings will provide an estimated trip cost upon request.

6.25 Irving Holdings will allow customers to schedule their return trip at the same time as the original trip, or to schedule the return trip after the fact if the exact return time is unknown.

6.26 Irving Holdings shall provide for Subscription service for customers who need to schedule a regularly-occurring trip(s) (e.g., same day/same time/weekly).

6.27 Irving Holdings will accept trip requests up to seven (7) days in advance.

6.28 Irving Holdings will notify DCTA, monthly, regarding trips booked outside the service parameters, individuals who have possibly moved, individuals who have gone negative on their debit card balance.

Customer Takes a Trip

6.29 Irving Holdings will operate Collin County Transit service on a 0-to-20-minute window for scheduled pick-ups.

6.30 The vehicle is considered on time when it arrives within the assigned 20-minute ready-time window (e.g., 10 minutes before or 10 minutes after the requested/scheduled pick-up time).

6.31 Passengers are encouraged to be ready 10 minutes prior to the scheduled arrival time and are expected to board within the first five (5) minutes of the vehicle arriving.

6.32 Service shall be provided curb-to-curb.

6.33 It is expected that the customer must be able to get themselves and any required equipment into and out of the taxi.

6.34 Ensure service animals are permitted on vehicles for those customers requiring service animal assistance, in compliance with the Americans with Disabilities Act.

6.35 Irving Holdings will allow trip cancellations up to two (2) hours before the scheduled pick-up time.

6.36 Irving Holdings shall track and report to DCTA the occurrence of customer cancellations and no-shows, as customers may be penalized for excessive cancellations or no-shows.

6.37 Irving Holdings will make every effort to provide the trip as requested. However, trip requests may be denied due to capacity constraints or eligibility.

Customer Payment

6.38 The one-way fare is based on the origin and destination requested by the customer; basic meter rates apply. $2.25 is the boarding fee plus $1.80 per mile. Traffic delay time/waiting-time charge of $.45 per every 1.5 minutes will apply. Riders may be responsible for any toll charges the trip may require as part of the fare.

6.39 Fares are to be paid using the taxi debit card. Taxi drivers will accept cash and credit card for any additional payments.

6.40 Personal Care Attendants (PCA) and guests may accompany a customer. Payment will be based upon McKinney Urban Transit District Board policy.

6.41 If the total fare is more than what is available on the debit card, it is the customer's responsibility to pay the difference (cash or credit card).

6.42 Taxi debit cards are not to be used for tipping.

Debit Card Balance

6.43 Irving Holdings shall provide for the following: allow customers to provide their email address to opt in to receive low balance alerts; low balance alerts are to be sent via email once a debit card balance has reached $20 or less; allow for customers to provide their email address or update their email address with Irving Holdings by calling 682.334.8045; Allow for customers to contact Irving Holdings at 682.334.8045 to obtain their balance and confirm receipt of payment.

6.44 Irving Holdings shall notify DCTA if an individual is to run out of funds twice in a 30-day period.

Lost, Stolen, or Damaged Debit Cards

6.45 Irving Holdings shall provide for the following: Customers to report a lost, stolen or damaged debit card to Irving Holdings at 682.334.8045.

6.46 Upon notification by the customer of a lost, stolen, or damaged card, Irving Holdings will immediately deactivate the lost, stolen, or damaged card.

6.47 Irving Holdings may charge the customer up to $1 dollar for each replacement card.

6.48 Irving Holdings will process all replacement card requests as expediently as possible, but not more than five business days from the date of the original request.

6.49 Any unused funds remaining on the lost, stolen, or damaged card will be transferred to the replacement card and mailed to the customer.

Customer Service

6.50 Customers will call Irving Holdings at 972.728.6789 for questions related to booking a trip, a trip already booked, or other service-related questions.

6.51 Irving Holdings shall ensure customer calls are answered in an expedient manner with minimal wait time and dropped calls.

6.52 The customer shall call DCTA Customer Service at 940.243.0077 with questions regarding how the program works, to determine eligibility for the program, and to provide feedback on the service provided.

6.53 DCTA Customer Service is available Monday through Friday from 5 a.m. to 7 p.m. and Saturdays from 8 a.m. to 4 p.m.

6.54 Irving Holdings shall respond to customer complaints, forwarded by DCTA, as expeditiously as possible, but not more than three business days from the initial inquiry.

Invoicing and Payment

6.55 Weekly, Irving Holdings will invoice DCTA based on the matching funds loaded on to authorized customer's debit cards the previous week. Supporting documentation will be provided in a mutually agreeable format.

6.56 Monthly, Irving Holdings will invoice DCTA for their 15% administrative fee based on the cost of the actual trips taken in the prior month. Supporting documentation will be provided in a mutually agreeable format.

Board of Directors Memo July 23, 2020

SUBJECT: Consider Award of Lakeway Administration Building Lease Extension

Background

DCTA initially entered into an agreement with Blacktop LLC on July 4, 2014 ("Original Lease") for the lease of 1955 Lakeway Drive, Suite #260, Lewisville, TX 75057 to serve as office space for DCTA administrative staff. The first amendment and extension of the lease agreement went into effect on March 23, 2017 ("First Amendment") and expires September 30, 2020. Terms for a 24-month extension beginning October 1, 2020 ("Second Amendment") and ending on September 30, 2022 were included in the terms of the First Amendment agreement.

Identified Need

The lease agreement for 1955 Lakeway Drive, Suite #260, Lewisville, TX 75057 expires on September 30, 2020. This location is utilized as office space for approximately twenty-three (23) DCTA administrative staff as well as a location to host routine Board of Directors meetings and meetings with external parties and the public. At this time, all other DCTA facilities are at capacity and cannot accommodate the needs served by the administrative office property.

Financial Impact

The total cost of the agreement takes into consideration two different fees. The first is the monthly base rent which is set forth within the lease agreement. The second is the Common Area Maintenance (CAM) fee, which is set each year by Blacktop LLC. DCTA estimates a 10% increase in CAM fees each year based on prior escalations. Monthly base rent is set on an October – September schedule, and the CAM fee is set on a January – December schedule.

The total cost of the 24-month lease agreement is not to exceed $245,081.01, which includes $120,237.06 for the first 12 months (base rent + CAM) and $124,843.95 for the second 12 months (base rent + CAM). Annual departmental budgets are incorporated into each fiscal year's budget.

Below is a comprehensive breakdown of the 24-month term, including base monthly rent and CAM fees.

Contract Dates	Monthly Base Rent	Annual Base Rent	CAM Dates	Monthly CAM Fees	Annual CAM Fees	Annual Total
-	-	-	10/1/20 – 12/31/2020 (3 months)	$2,097.00	$6,291	$6,291
10/1/20 – 9/30/21	$7,765.48 (2.1% increase compared to year prior)	$93,185.76	1/1/2021 – 9/30/21 (9 months)	$2,306.70 (est. 10% increase compared to prior year)	$20,760.30	$113,946.06
					Year 1 Total	**$120,237.06**
(3.8% increase compared to current year in existing contract)						
-	-	-	10/1/21 – 12/31/21 (3 months)	$2,306.70	$6,920.10	$6,920.10
10/1/21 – 9/30/22	$7,923.96 (2% increase compared to prior year)	$95,087.52	1/1/22 – 9/30/22 (9 months)	$2,537.37 (est. 10% increase compared to prior year)	$22,836.33	$117,923.85
					Year 2 Total	**$124,843.95**
(3.8% increase compared to prior year)						

Recommendation

DCTA staff requests that the Board of Directors review the supporting documents and approve a 24-month extension of 1955 Lakeway Drive, Suite #260, Lewisville, TX 75057, beginning October 1, 2020 and expiring September 30, 2022, in an amount not to exceed $245,081.01, to serve as office space for DCTA administrative staff.

Exhibits

Exhibit 1: Lakeway Lease History
Exhibit 2: "Second Amendment" Lakeway Administration Building Lease Agreement (proposed)
Exhibit 3: "First Amendment" Lakeway Administration Building Lease Agreement (current)

Submitted By: _____
Nicole Recker, VP of Mobility Services and Administration

Approval: _____
Raymond Suarez, CEO

LAKEWAY LEASE HISTORY

- Monthly Rental Rate – based on fiscal year dates
- Community Area Fees (CAM) – based on calendar year dates

BASE $

CAM $

LAKEWAY LEASE CONTRACT OVERVIEW						
Contract Date	Contract Start & End Dates	Monthly Base Rent	Annual Base Rent	CAM Start & End Dates	Monthly CAM Fees	Annual CAM Fees
Original Agreement 7/3/2014	09/1/14 - 09/30/17 ($9065 Security Deposit)		$0.00			
	Month 1 is free (9/1/14-9/30/14)		$0.00	9/1/14-9/31/14	$0	$0
	Months 2-13 (10/1/14-9/30/15)	$6,973.08	$83,676.96	10/1/14-12/31/14	$1,774.97	$5,324.91
	Months 14-25 (10/1/15-9/30/16)	$6,973.08	$83,676.96	1/1/15-12/31/15	$1,774.97	$21,299.64
	Months 26-37 (10/1/16-9/30/17)	$7,290.04	$87,480.48	1/1/16-12/31/16	$1,774.97	$21,299.64
First Amendment 3/23/2017	10/1/17-9/30/18	$7,290.04	$87,480.48	1/1/17-12/31/17	$2,249.95	$26,999.40
	10/1/18-9/30/19	$7,448.52	$89,382.24	1/1/18-12/31/18	$1,238.00	$14,856.00
	10/1/19-9/30/20	$7,607.00	$91,284.00	1/1/19-12/31/19	$1,900.00	$22,800.00
				1/1/20 – 9/30/20	$2,097	$18,873

SECOND AMENDMENT TO OFFICE/WAREHOUSE LEASE AGREEMENT

This Second Amendment to Office/Warehouse Lease Agreement (this "**Amendment**") is entered into to be effective as of April ___, 2020 (the "**Amendment Effective Date**"), between BLACK TOP, LLC, a Texas limited liability company ("**Landlord**"), and DENTON COUNTY TRANSPORTATION AUTHORITY ("**Tenant**").

RECITALS:

WHEREAS, Tenant and a predecessor-in-interest of Landlord entered into that certain Office/Warehouse Lease Agreement dated July 3, 2014 (the "**Original Lease**"), as amended by First Amendment to Office/Warehouse Lease Agreement dated _____, 2017 (the "**First Amendment**"; the Original Lease and the First Amendment are collectively, the "**Existing Lease**"), for certain premises known as Suite 260 (the "**Premises**") in the building located at 1955 Lakeway Drive, Lewisville, Texas 75057, as more fully described in the Existing Lease. All capitalized terms not otherwise defined herein shall have the meanings given them in the Existing Lease. The Existing Lease and this Amendment are collectively referred to herein as the "**Lease**."

WHEREAS, Landlord and Tenant have agreed to modify the Existing Lease, subject to the terms and conditions of this Amendment.

NOW, THEREFORE, for good and valuable consideration, the receipt and sufficiency of which are hereby acknowledged, the parties hereto agree, and the Existing Lease is amended as follows:

AGREEMENTS:

1. **Lease Term**. Tenant timely exercised the Renewal Option contemplated by the First Amendment. Accordingly, the parties hereby confirm the extension of the Lease Term for a period of 24 months, commencing October 1, 2020, and expiring September 30, 2022 (the "**Second Renewal Term**"). Tenant shall have no further options or rights of extension or renewal.

2. **Base Rent**. The Base Rent for the first 12 months of the Second Renewal Term shall be equal to $7,765.48 per month, and the Base Rent for months 13 through 24 of the Second Renewal Term shall be equal to $7,923.96 per month. Tenant shall continue to pay Additional Rent (including without limitation Tenant's Proportionate Share of Operating Expenses) upon the same terms and conditions as provided in the Existing Lease.

3. **Premises**. Tenant accepts the Premises in "AS IS", "WITH ALL FAULTS" condition as of the date of this Amendment and Landlord has no responsibility to make any alterations or improvements to the Premises. **Tenant specifically acknowledges that Landlord has made no representations or warranties whatsoever concerning the condition of any aspect of the Premises and the Building, or the present or future suitability for Tenant's use, and Tenant waives all implied warranties**.

4. **Full Force and Effect**. Except as modified by this Amendment, all terms and conditions of the Lease shall remain in full force and effect and Landlord and Tenant shall be bound thereby. Tenant hereby represents, warrants and agrees that: (a) there exists no breach, default or event of default by Landlord under the Lease, or any event or condition which, with notice or passage of time or both, would constitute a breach, default or event of default by Landlord under the Lease, (b) the Lease continues to be a legal, valid and binding agreement and obligation of Tenant, and (c) Tenant has no offset or defense to its performance or obligations under the Lease. Tenant hereby waives and releases all demands, charges, claims, accounts or causes of action of any nature against Landlord or Landlord's employees or agents,

including without limitation, both known and unknown demands, charges, claims, accounts, and causes of action that have arisen out of or in connection with the Lease or Tenant's occupancy of the Premises under the Lease.

5. **Broker**. Tenant represents and warrants that it has not dealt with any broker in connection with the negotiation or execution of this Amendment, and Tenant agrees to indemnify and hold Landlord harmless from all liability arising from any claim by any other broker claiming under Tenant including, without limitation, the cost of reasonable counsel fees in connection therewith.

6. **Anti-Terrorism Statute Compliance.** Tenant hereby represents and warrants to Landlord that Tenant is not: (a) in violation of any Anti-Terrorism Law; (b) conducting any business or engaging in any transaction or dealing with any Prohibited Person, including the making or receiving or any contribution of funds, goods or services to or for the benefit of any Prohibited Person; (c) dealing in, or otherwise engaging in any transaction relating to, any property or interest in property blocked pursuant to Executive Order No. 13224; (d) engaging in or conspiring to engage in any transaction that evades or avoids, or had the purpose of evading or avoiding, or attempts to violate any of the prohibitions set forth in any Anti-Terrorism Law; or (e) a Prohibited Person, nor are any of its partners, members, managers, officers or directors a Prohibited Person. As used herein, "**Antiterrorism Law**" is defined as any law relating to terrorism, anti-terrorism, money laundering or anti-money laundering activities, including Executive Order No. 13224 and Title 3 of the USA Patriot Act. As used herein "**Executive Order No. 13224**" is defined as Executive Order No. 13224 on Terrorist Financing effective September 24, 2001, and relating to "Blocking Property and Prohibiting Transactions With Persons Who Commit, or Support Terrorism" "**Prohibited Person**" is defined as (i) a person or entity that is listed in the Annex to Executive Order 13224; (ii) a person or entity with whom Tenant or Landlord is prohibited from dealing or otherwise engaging in any transaction by any Anti-Terrorism Law; or (iii) a person or entity that is named as a "specially designated national and blocked person" on the most current list published by the U.S. Treasury Department Office Of Foreign Assets Control as its official website, http://www.treas.gov/ofac/t11sdn.pdf or at any replacement website or other official publication of such list. "**USA Patriot Act**" is defined as the Uniting and Strengthening America by Providing Appropriate Tools Required to Intercept and Obstruct Terrorism Act of 2001" (Public Law 107-56).

7. **Miscellaneous**. This Amendment may be executed in two or more counterparts, each of which is deemed an original and all of which together constitute one and the same instrument. Facsimile or "pdf" signatures are binding on the party providing them. Each party represents and warrants that it has due power and lawful authority to execute and deliver this Amendment; and the Lease contains the valid, binding and enforceable obligations of such party.

[Signatures Follow]

IN WITNESS WHEREOF, the parties hereto have executed this Amendment as of the date first written above

TENANT:

DENTON COUNTY TRANSPORTATION AUTHORITY

By:_____
Name:_____
Title:_____

LANDLORD:

BLACK TOP, LLC,
a Texas limited liability company

By:_____
Name:_____
Title:_____

FIRST AMENDMENT TO OFFICE/WAREHOUSE LEASE AGREEMENT

THIS FIRST AMENDMENT TO OFFICE/WAREHOUSE LEASE AGREEMENT (this "**Amendment**") is entered into as of MARCH 23, 2017 (the "**Amendment Effective Date**"), between BLACK TOP, LLC, a Texas limited liability company ("**Landlord**"), successor-in-interest to FN Waters Ridge, LLC, a Texas limited liability company, and DENTON COUNTY TRANSPORTATION AUTHORITY ("**Tenant**").

RECITALS:

A. A predecessor-in-interest of Landlord and Tenant entered into a certain Office/Warehouse Lease Agreement dated effective July 3, 2014 (the "**Original Lease**"; the Original Lease and this Amendment are hereinafter collectively referred to as the "**Lease**") for 7,607 square feet of rentable area known as Suite 260 (the "**Premises**"), in the building known as Waters Ridge IB, located at located at 1955 Lakeway Drive, Suite 260, Lewisville, Texas 75057 (the "**Building**"); and

B. Landlord and Tenant now desire to extend the Lease term and otherwise modify the Lease subject to the terms and conditions of this Amendment.

NOW, THEREFORE, for good and valuable consideration, the receipt and sufficiency of which are hereby acknowledged, the parties agree, and the Original Lease is modified as follows:

AGREEMENTS:

1. **Definitions**. All capitalized terms not otherwise defined herein have the meanings given them in the Original Lease.

2. **Renewal**. The Lease Term is extended for a period of thirty six (36) months, commencing October 1, 2017 (the "**Renewal Effective Date**") and expiring September 30, 2020 (the "**Renewal Term**"), upon the same terms and conditions as provided in the Original Lease, except as modified by this Amendment.

3. **Base Rent**. Commencing on the Renewal Effective Date, Tenant shall pay Base Rent as follows:

Period	Annual Base Rent	Monthly Installment of Base Rent
10/1/2017 – 9/30/2018	$87,480.48	$7,290.04
10/1/2018 – 9/30/2019	$89,382.24	$7,448.52
10/1/2019 – 9/30/2020	$91,284.00	$7,607.00

Tenant shall continue to pay Additional Rent (including without limitation Tenant's Proportionate Share of Operating Expenses) upon the same terms and conditions as provided in the Original Lease.

4. **Renewal Option**.

a) Option. Provided that no Default Event, assignment or sublease has occurred under any term or provision contained in the Lease and no condition exists which with the passage of time or the giving of notice or both would constitute a Default Event pursuant to the Lease, and provided that Tenant has continuously occupied the entire Premises for the Permitted Use during the Lease Term, Tenant (but not any assignee or sublessee) shall have the right and option (the "**Renewal Option**") to renew the Lease, by written notice delivered to Landlord no later than six (6) months (but no more than nine (9) months) prior to the expiration of the Renewal Term for a period of twenty-four (24) months (the "**Second Renewal Term**"), under the same terms, conditions and covenants contained in the Lease, except that (a) no abatements or other concessions, if any, applicable to the initial Lease Term or the Renewal Term shall apply to the Second Renewal Term; (b) the Base Rent for the first twelve (12) months of the Second Renewal Term shall be equal to $7,765.48 per month and the Base Rent for the months thirteen (13)

through twenty-four (24) of the Second Renewal Term shall be equal to $7,923.96 per month; and (c) all leasehold improvements within the Leased Premises shall be provided in their then existing condition (on an "As Is" basis) at the time Second the Renewal Term commences. Failure by Tenant to notify Landlord in writing of Tenant's election to exercise the Renewal Option herein granted within the time limits set forth for such exercise shall constitute a waiver of such Renewal Option.

b) Extension. Upon exercise of the Renewal Option by Tenant and subject to the conditions set forth hereinabove, the Lease shall be extended for the period of such Second Renewal Term without the necessity of the execution of any further instrument or document, although if requested by either party, Landlord and Tenant shall enter into a written agreement modifying and supplementing the Lease in accordance with the provisions hereof. Any termination of the Lease during the Renewal Term shall terminate all renewal rights hereunder. The renewal rights of Tenant hereunder shall not be severable from the Lease, nor may such rights be assigned or otherwise conveyed in connection with any permitted assignment of the Lease. Landlord's consent to any assignment of the Lease shall not be construed as allowing an assignment of such rights to any assignee.

c) Financial Condition. As a condition to Tenant exercising its rights pursuant to this Section 4, Tenant shall deliver to Landlord complete current financial statements of Tenant and any guarantors. Landlord shall have the right to review such financial statements. If Landlord is not satisfied, in its discretion, that Tenant has sufficient liquidity and ability to perform its obligations under the Lease during the Second Renewal Term, then Landlord shall so inform Tenant and the Renewal Option shall be of no force or effect.

5. Premises. Tenant accepts the Premises in "AS IS", "WITH ALL FAULTS" condition as of the date of this Amendment. Landlord has no responsibility to make any alterations or improvements to the Premises, except as expressly set forth in this Amendment. Exhibit D to the Original Lease is hereby deleted in its entirety. **Tenant specifically acknowledges that Landlord has made no representations or warranties whatsoever concerning the condition of any aspect of the Premises and the Building, or the present or future suitability for Tenant's use, and Tenant waives all implied warranties.**

6. Subleases. Article 10 of the Original Lease is hereby amended by adding the following language at the end of said Article 10:

> "Notwithstanding anything herein to the contrary, Tenant may assign its entire interest under the Lease or sublet the Premises, or a portion thereof, (i) to any entity controlling or controlled by or under common control with Tenant or (ii) to any successor to Tenant by purchase, merger, consolidation or reorganization (hereinafter, collectively, referred to as "**Permitted Transfer**") without the consent of Landlord, provided: (1) Tenant is not in default under the Lease; (2) if such proposed transferee is a successor to Tenant by purchase, said proposed transferee shall acquire all or substantially all of the stock or assets of Tenant's business or, if such proposed transferee is a successor to Tenant by merger, consolidation or reorganization, the continuing or surviving entity shall own all or substantially all of the assets of Tenant; (3) with respect to a Permitted Transfer to a proposed transferee described in clause (ii), such proposed transferee shall have a net worth which is at least equal to the lesser of Tenant's net worth at the date of the Lease or Tenant's net worth as of the day prior to the proposed purchase, merger, consolidation or reorganization as evidenced to Landlord's reasonable satisfaction; and (4) Tenant shall give Landlord written notice at least thirty (30) days' prior to the effective date of the proposed purchase, merger, consolidation or reorganization. No such Permitted Transfer shall relieve Tenant of its obligations under the Lease."

7. **HVAC Maintenance and Repair**. Section 7.02 of the Original Lease is hereby amended by replacing the third sentence of said Section 7.02 with the following language:

> "Commencing on the first anniversary of the Commencement Date and thereafter, Tenant shall be responsible for all HVAC equipment repairs or replacements; provided, however, commencing with each Lease Year beginning on or after the first anniversary of the Commencement Date, Landlord shall reimburse Tenant for all amounts exceeding $2500.00 spent by Tenant during the Lease Year for the repair or replacement of any of the Existing Units upon receipt of (i) invoices confirming the costs incurred by Tenant for such repairs or replacement and (ii) evidence satisfactory to Landlord that Tenant has maintained the preventive maintenance contract in accordance with Section 7.03(d) below."

8. **Accounting Principles**. The Original Lease is amended by adding the following as Section 4.05:

> **"4.05 Accounting Principles.** Landlord and Tenant agree that each provision of the Lease for determining charges, amounts and Additional Rental payments by Tenant (including without limitation, this Article III) is commercially reasonable, and as to each such charge or amount, constitutes a "method by which the charge is to be computed" for purposes of Section 93.012 (Assessment of Charges) of the Texas Property Code, as such section now exists or as it may be hereafter amended or succeeded."

9. **Addresses for Notice**. Landlord's addresses for notice shall be as follows:

> Black Top, LLC
> c/o TIG Real Estate Services, Inc.
> 2600 Dallas Parkway, Suite 290
> Frisco, Texas 75034

or such other name and address as Landlord shall, from time to time, designate.

10. **Deletions**. There are no options or rights of early expiration, extension, renewal or expansion, except as specifically set forth in this Amendment. All such prior rights and options in the Original Lease, including without limitation Section 15.01 of the Original Lease, are deleted.

11. **Full Force and Effect**. Except as modified by this Amendment, all terms and conditions of the Lease shall remain in full force and effect and Landlord and Tenant shall be bound thereby. Tenant hereby represents, warrants and agrees that: (a) there exists no breach, default or event of default by Landlord under the Lease, or any event or condition which, with notice or passage of time or both, would constitute a breach, default or event of default by Landlord under the Lease, (b) the Lease continues to be a legal, valid and binding agreement and obligation of Tenant, and (c) Tenant has no offset or defense to its performance or obligations under the Lease. Tenant hereby waives and releases all demands, charges, claims, accounts or causes of action of any nature against Landlord or Landlord's employees or agents, including without limitation, both known and unknown demands, charges, claims, accounts, and causes of action that have arisen out of or in connection with the Lease or Tenant's occupancy of the Premises under the Lease.

12. **Broker**. Tenant represents and warrants that it has not dealt with any broker other than Bridge Realty of Texas (representing Tenant) and Paladin Partners (representing Landlord) in connection with the negotiation or execution of this Amendment, and Tenant agrees to indemnify and hold Landlord harmless from all liability arising from any claim by any other broker claiming under Tenant including, without limitation, the cost of reasonable counsel fees in connection therewith.

13. **Authority**. Each party represents and warrants that it has due power and lawful authority to execute and deliver this Amendment and to perform its obligations under the Lease; and the Lease and this Amendment are the valid, binding and enforceable obligations of such party.

14. **Anti-Terrorism Statute Compliance**. Tenant hereby represents and warrants to Landlord that Tenant is not: (a) in violation of any Anti-Terrorism Law; (b) conducting any business or engaging in any transaction or dealing with any Prohibited Person, including the making or receiving or any contribution of funds, goods or services to or for the benefit of any Prohibited Person; (c) dealing in, or otherwise engaging in any transaction relating to, any property or interest in property blocked pursuant to Executive Order No. 13224; (d) engaging in or conspiring to engage in any transaction that evades or avoids, or had the purpose of evading or avoiding, or attempts to violate any of the prohibitions set forth in any Anti-Terrorism Law; or (e) a Prohibited Person, nor are any of its partners, members, managers, officers or directors a Prohibited Person. As used herein, "**Antiterrorism Law**" is defined as any law relating to terrorism, anti-terrorism, money laundering or anti-money laundering activities, including Executive Order No. 13224 and Title 3 of the USA Patriot Act. As used herein "**Executive Order No. 13224**" is defined as Executive Order No. 13224 on Terrorist Financing effective September 24, 2001, and relating to "Blocking Property and Prohibiting Transactions With Persons Who Commit, or Support Terrorism" "**Prohibited Person**" is defined as (i) a person or entity that is listed in the Annex to Executive Order 13224; (ii) a person or entity with whom Tenant or Landlord is prohibited from dealing or otherwise engaging in any transaction by any Anti-Terrorism Law; or (iii) a person or entity that is named as a "specially designated national and blocked person" on the most current list published by the U.S. Treasury Department Office Of Foreign Assets Control as its official website, http://www.treas.gov/ofac/t11sdn.pdf_ or at any replacement website or other official publication of such list. "**USA Patriot Act**" is defined as the Uniting and Strengthening America by Providing Appropriate Tools Required to Intercept and Obstruct Terrorism Act of 2001" (Public Law 107-56).

[Signatures Follow]

EXECUTED as of the date first written above.

LANDLORD:

BLACK TOP, LLC,
a Texas limited liability company

By: _____
Name: Ronald Denhoyer
Title: CFO

Date: 3/23/17

TENANT:

DENTON COUNTY TRANSPORTATION AUTHORITY

By: _____
Name: James C. Cline, Jr.
Title: President

Date: 7 March 2017

DCTA Board Agenda Outlook As of 7/17/20

AUGUST 27, 2020	SEPTEMBER 24, 2020	October 22, 2020
CONSENT ▪ Approval of Minutes ▪ Monthly Financial Statements: (Monthly Financials, Capital Projects Budget Report) ***INFORMATIONAL REPORTS*** ▪ Monthly Financial Reports: (Sales Tax, MaaS Update, Budget Transfers) ▪ Ridership Trend Report ▪ Train the Trainer Program Development Update ▪ MaaS On Demand RFP Update ▪ April Board Info Requests *- Performance Measures by Route with Associated Revenue* ***REGULAR AGENDA*** ***Discussion Topics*** ▪ Board Information Request Process ▪ Presentation of Proposed FY2021 Operating & Capital Budget ▪ Public Hearing on Proposed FY2021 Operating & Capital Budget ▪ Transformation Initiative Progress Report ▪ State Legislative Agenda Discussion ▪ DART Access Agreement ▪ Strategic Priorities ***Action*** ▪ Transportation Reinvestment Program (TRiP) Policy ▪ Irving Holdings MUTD Task Order ▪ City of Coppell Lyft Contract Renewal ▪ MaaS Task Order #2; Member City On-Demand Services ***Information*** ▪ Local & Regional Transportation Updates and Legislative Issues	***CONSENT*** ▪ Approval of Minutes ▪ Monthly Financial Statements: (Monthly Financials, Capital Projects Budget Report) ***INFORMATIONAL REPORTS*** ▪ Monthly Financial Reports: (Sales Tax, MaaS Update, Budget Transfers) ▪ Ridership Trend Report ***REGULAR AGENDA*** ***Discussion Topics*** ▪ Transformation Initiative Progress Report ▪ MK101 Ridership/Discussion of Fare Policy ***Action*** ▪ Resolution Adopting FY2021 Operating & Capital Budget ▪ Resolution Approving Financial Management Policies and Annual Investment Policy for FY2021 ▪ Agency State Legislative Agenda ***Information*** ▪ Local & Regional Transportation Updates and Legislative Issues	***CONSENT*** ▪ Approval of Minutes ▪ Monthly Financial Statements: (Monthly Financials, Capital Projects Budget Report) ▪ Quarterly Investment Report ▪ Quarterly Grants Report ***INFORMATIONAL REPORTS*** ▪ Monthly Financial Reports: (Sales Tax, MaaS Update, Budget Transfers) ▪ Ridership Trend Report ***REGULAR AGENDA*** ***Discussion Topics*** ▪ Transformation Initiative Progress Report ***Action*** ▪ Non-Rev Vehicle Purchase ***Information*** ▪ Local & Regional Transportation Updates and Legislative Issues